RIVIERA THEATRE GREEN ROOM

RIVIERA THEATRE AND ORGAN PRESERVATION SOCIETY

67 WEBSTER ST.
NORTH TONAWANDA, NY 14120
10/21/2026
100% CONSTRUCTION DOCUMENTS
PROJECT #2545



SHEET NUMBER	SHEET NAME
GENERAL	
A-001	SYMBOLS, ABBREVIATIONS & GEN. NOTES
CODE REVIEW	
LS-01	LIFE SAFETY
CIVIL	
SP-101	SITE LAYOUT & LANDSCAPE PLAN
SP-102	SITE DRAINAGE & UTILITIES PLAN
SP-103	SITE GRADING PLAN
SP-201	SITEWORK DETAILS
SP-202	SITEWORK SPECIFICATIONS
STRUCTURAL	
S-101	FOUNDATION / FLOOR PLAN
S-102	ROOF FRAMING PLAN
S-201a	GENERAL NOTES
S-201b	GENERAL NOTES
S-202	TYPICAL DETAILS
S-203	TYPICAL DETAILS
S-204	TYPICAL DETAILS
S-301	SECTIONS AND DETAILS
S-302	SECTIONS AND DETAILS
S-303	SECTIONS AND DETAILS
ARCHITECTURAL DEMOLITION	
D-101	FIRST FLOOR DEMOLITION PLAN
ARCHITECTURAL	
A-100	SITE PLAN
A-101	FIRST FLOOR PLAN
A-102	ROOF PLAN
A-200	EXTERIOR ELEVATIONS
A-250	BUILDING SECTIONS
A-400	REFLECTED CEILING PLAN
A-500	EXTERIOR WALL SECTIONS & DETAILS
A-550	PLAN DETAILS
A-560	SECTION DETAILS
A-600	FINISH PLAN
A-610	INTERIOR ELEVATIONS
A-615	TOILET ROOM PLANS AND ELEVATIONS
A-801	DOOR SCHEDULE
MECHANICAL	
M-001	MECHANICAL SCHEDULES
M-002	MECHANICAL DETAILS
M-100	GROUND LEVEL MECHANICAL PLAN
M-400	MECHANICAL SPECIFICATIONS

SHEET NUMBER	SHEET NAME
PLUMBING	
P-001	PLUMBING SCHEDULES
P-002	PLUMBING SCHEDULES AND LEGEND
P-003	PLUMBING DETAILS
P-100	BASEMENT AND GROUND FLOOR PLUMBING PLAN - DOMESTIC WATER
P-101	GROUND FLOOR PLUMBING PLAN - WASTE AND VENT
P-200	PLUMBING RISER DIAGRAMS
P-400	PLUMBING SPECIFICATIONS
FIRE PROTECTION	
FP-001	FIRE PROTECTION SCHEDULES, LEGENDS, AND SPECIFICATIONS
FP-100	FIRE PROTECTION PLANS
ELECTRICAL	
E-001	ELECTRICAL SYMBOL LEGEND AND GENERAL NOTES
E-101	THEATRE BASEMENT PLAN - ELECTRICAL
E-102	THEATRE FIRST FLOOR PLANS - ELECTRICAL
E-103	EXPANSION BUILDING PLAN - LIGHTING
E-104	EXPANSION BUILDING PLAN - ELECTRICAL POWER AND SYSTEMS
E-200	ELECTRICAL LIGHTING SCHEDULE
E-300	ELECTRICAL SINGLE LINE DIAGRAM
E-400	ELECTRICAL SPECIFICATIONS 1 OF 2
E-401	ELECTRICAL SPECIFICATIONS 2 OF 2

CIVIL/STRUCTURAL ENGINEER

TREDO ENGINEERS

755 SENECA STREET
BUFFALO, NY 14210

716.876.7147 tel

www.tredoengineers.com

OWNER

RIVIERA THEATRE

67 WEBSTER STREET
TONAWANDA, NY 14210

716.692.2413 tel

www.rivieratheatre.org

ARCHITECT

CJS ARCHITECTS

755 SENECA STREET
BUFFALO, NY 14210

716.856.6448 tel

www.cjsarchitects.com

MEP/FP ENGINEER

BUFFALO ENGINEERING, PC

4245 UNION ROAD
BUFFALO, NY 14425

716.633.5300 tel

www.buffaloengineering.com

ABBREVIATIONS

ALL ABBREVIATIONS NOT NECESSARILY USED

A.F.F.	ABOVE FINISHED FLOOR	EXIST.	EXISTING	MAS.	MASONRY	RFG.	ROOFING
ABSORB.	ABSORBATIVE	EXP.	EXPANSION	MO	MASONRY OPENING	RM.	ROOM
A.D.	ACCESS DOOR	E.J.	EXPANSION JOINT	MATL.	MATERIAL	R.F.S.	ROOM FINISH SCHEDULE
ACOUST.	ACOUSTICAL	EXP.	EXPOSED	MAX.	MAXIMUM	R.O.	ROUGH OPENING
A.C.T.	ACOUSTICAL CEILING TILE	EXT.	EXTERIOR	MECH.	MECHANICAL	RND.	ROUND
A.P.	ACCESS PANEL	E.I.F.S.	EXTERIOR INSULATION AND FINISH SYSTEM	MEMB.	MEMBRANE	RUB.	RUBBER
A.W.P.	ACOUSTICAL WALL PANEL			MTL.	METAL	RT	RUBBER TILE
ADH.	ADHESIVE	F.W.C.	FABRIC WALL COVERING	MWU	MILLWORK UNIT	RBL.	RUBBLE STONE
ADJ.	ADJACENT	F.B.	FACE BRICK	MIN.	MINIMUM	R.O.B.	RUN OF BANK
ADJUST.	ADJUSTABLE	F.C.U.	FAN COIL UNIT	MISC.	MISCELLANEOUS		
AGGR.	AGGREGATE	F.N.D.	FEMININE NAPKIN DISPOSAL	MTD.	MOUNTED	SNC.	SANITARY NAPKIN CABINET
A.C.	AIR CONDITIONING	F.R.P.	FIBERGLASS REINFORCED POLYESTER	MOV.	MOVABLE	SND	SANITARY NAPKIN DISPOSER
AL.	ALIGN	F.T.R.	FIN TUBE RADIATION	MULL.	MULLION	SCHED.	SCHEDULE
ALT.	ALTERATION	FIN.	FINISH (ED)			SNT.	SEALANT
ALTN.	ALTERNATE	F.F.	FINISH FLOOR	NAT.	NATURAL	STG.	SEATING
ALUM.	ALUMINUM	F.A.	FIRE ALARM	NRC	NOISE REDUCTION COEFFICIENT	SECT.	SECTION
APPD.	APPROVED	F.A.C.P.	FIRE ALARM CONTOL PANEL	N.I.C.	NOT IN CONTRACT	SB	SHAMPOO BOWL
APPROX.	APPROXIMATE	F.E.C.	FIRE EXTINGUISHER CABINET	N.T.S.	NOT TO SCALE	SHTG.	SHEATHING
ARCH.	ARCHITECTURAL	F.H.C.	FIRE HOSE CABINET	NOM.	NOMINAL	SHT.	SHEET
ASB.	ASBESTOS	F.P.	FIRE PROOFING	NO.	NUMBER	SV	SHEET VINYL
A.A.C.	ASBESTOS ABATEMENT CONTRACTOR	FL.	FLOOR			SH.	SHELF, SHELVING
ASPH.	ASPHALT	F.D.	FLOOR DRAIN	O.C.	ON CENTER	SHWR.	SHOWER
AUTO.	AUTOMATIC	FT.	FOOT	OPNG.	OPENING	SIM.	SIMILAR
AVG.	AVERAGE	FTG.	FOOTING	OPP.	OPPOSITE	S.D.	SOAP DISPENSER
		FDTN.	FOUNDATION	O.H.	OPPOSITE HAND	S.C.	SOLID CORE
BSMT.	BASEMENT	FUR.	FURRING	OD	OUTSIDE DIAMETER	SPKR.	SPEAKER
BRG.	BEARING			OH.	OVERHEAD	SPEC.	SPECIFICATION
BTWN.	BETWEEN	GAL.	GALLON			SQ.	SQUARE
BIT.	BITUMINOUS	GALV.	GALVANIZED	PNT.	PAINT (ED)	S.F.	SQUARE FOOT
BLK.	BLOCK	G.I.	GALVANIZED IRON	PR.	PAIR	S.S.	STAINLESS STEEL
BLKG.	BLOCKING	GA.	GAUGE, GAGE	PNL.	PANEL	S.P.	STAND PIPE
BD.	BOARD	G.C.	GENERAL CONTRACT (OR)	PTD	PAPER TOWEL DISPENSER	STD.	STANDARD
BTM.	BOTTOM	GL.	GLASS	PTR	PAPER TOWEL RECEPTOR	STL.	STEEL
BRK.	BRICK	G.B.	GRAB BAR	P.BD.	PARTICLE BOARD	ST.	STONE
B.C.	BRICK COURSE	G.F.I.	GROUND FAULT INTERRUPTER	PTN.	PARTITION	STOR.	STORAGE
BLDG.	BUILDING	GRN.	GRANITE	PVMT.	PAVEMENT	SD	STORM DRAIN
B.U.R.	BUILT-UP ROOFING	GYP.	GYPSUM	PERF.	PERFORATED	STR.	STRUCTURAL
B.O.	BY OWNER	G.W.B.	GYPSUM WALL BOARD	PLAS.	PLASTER	SGT	STRUCTURAL GLAZED TILE
				PLAS.LAM.	PLASTIC LAMINATE	SUSP.	SUSPENDED
CAB.	CABINET	HDNR.	HARDENER	PL.	PLATE	SW.	SWITCH
CPT.	CARPET	HDW.	HARDWARE	PL.GL.	PLATE GLASS	SW.BD.	SWITCH BOARD
C.I.	CAST IRON	HDWD.	HARDWOOD	PLBG.	PLUMBING	SYM.	SYMMETRICAL
C.I.P.	CAST IN PLACE	HTR.	HEATER	P.C.	PLUMBING CONTRACTOR		
CW.	CASEWORK	HTG.	HEATING	PLYWD.	PLYWOOD	TKBD.	TACKBOARD
C.B.	CATCH BASIN	H.C.	HEATING CONTRACTOR	PT.	POINT	TEL.	TELEPHONE
CLG.	CEILING	H.V.A.C.	HEATING, VENTILATING & AIR CONDITIONING	PPG	POLISHED PLATE GLASS	TEMP.	TEMPORARY
CEM.	CEMENT			PPTG	POLISHED PLATE	TER.	TERRAZZO
C.M.T.	CERAMIC MOSAIC TILE	HT.	HEIGHT		TEMPERED GLASS	TEXT.	TEXTURE
C.M.T.B.	CERAMIC MOSAIC TILE BASE	HPC	HIGH PERFORMANCE COATINGS	PPWG	POLISHED PLATE	THK.	THICK (NESS)
CER.	CERAMIC	HPL	HIGH PRESSURE PLASTIC		WIRE GLASS	THR.	THRESHOLD
C.T.	CERAMIC TILE		LAMINATE	POLY.	POLYETHYLENE	TBD	TO BE DETERMINED
C.T.B.	CERAMIC TILE BASE	H.C.	HOLLOW CORE	PRT	POLY RESIN TILE	TLT.	TOILET
CHBD.	CHALK BOARD	H.M.	HOLLOW METAL	P.V.C.	POLYVINYL CHLORIDE	TPH	TOILET PAPER HOLDER
C.O.	CLEAN OUT	HORIZ.	HORIZONTAL	PCF	POUNDS PER CUBIC FOOT	T&G	TONGUE & GROOVE
CLR.	CLEAR	H.B.	HOSE BIB	PSF	POUNDS PER SQUARE FOOT	T.O.G.	TOP OF GRATE
CLO.	CLOSET	H.CAB.	HOSE CABINET	PSI	POUNDS PER SQUARE INCH	T.O.S.	TOP OF STEEL
COL.	COLUMN	H.PL.	HOT PLATE	PT	PORCELAIN TILE	T.O.W.	TOP OF WALL
C.W.	COLD WATER	H.W.	HOT WATER	PCP	PRECAST CONCRETE PANEL	TB	TOWEL BAR
CONC.	CONCRETE	HR.	HOUR	PRE-FAB.	PREFABRICATED	TYP.	TYPICAL
C.M.U.	CONCRETE MASONRY UNIT	H.S.	HOSPITAL STOP	PREF.	PREFINISHED		
CONT.	CONTINUOUS			PMLD.	PREMOLDED	U/C.	UNDER COUNTER
C.J.	CONTROL JOINT	IN.	INCH	PSC.	PRE-STRESSED CONCRETE	UCL.	UNDER COUNTER LIGHT
C.G.	CORNER GUARD	I.M.	INSULATED METAL	PROJ.	PROJECTION	UL	UNDERWRITERS LABORATORIES
CORR.	CORRIDOR	INSUL.	INSULATION OR INSULATED	PL	PROPERTY LINE	UNGND.	UNDERGROUND
C.M.P.	CORRIGATED METAL PANEL	INT.	INTERIOR	PPL	PUSH PLATE	UV	UNIT VENTILATOR
CRS.	COURSES	INV.	INVERT			U.N.O.	UNLESS NOTED OTHERWISE
		ISO.	ISOLATION	QTY.	QUANTITY	UPH.	UPHOLSTERY
DEM.	DEMOLISH / DEMOLITION			QT	QUARRY TILE		
DET.	DETAIL	JAN.	JANITOR'S CLOSET			V.B.	VAPOR BARRIER
DIAG.	DIAGONAL	J.T.	JOINT	RAD.	RADIUS	VIF	VERIFY IN FIELD
DIA.	DIAMETER			R.W.L.	RAIN WATER LEADER	VERT.	VERTICAL
DIFF.	DIFFUSER	LAM.	LAMINATE	RECPT.	RECEPTACLE, ELECTRIC	VEST.	VESTIBULE
DIM.	DIMENSION	LAV.	LAVATORY	REC.	RECESS (ED)	V.C.T.	VINYL COMPOSITION TILE
DISP.	DISPENSER	LH	LEFT HAND	R.C.P.	REFLECTED CEILING PLAN	V.W.C.	VINYL WALL COVERING
DR.	DOOR	LGT.	LENGTH	REF.	REFRIGERATOR		
DBL.	DOUBLE	LT.	LIGHT	REG.	REGISTER	WSCT.	WAINSCOT
DN.	DOWN	LT.P.	LIGHT PANEL	REINF.	REINFORCE (D) (ING) (MENT)	WC	WATER CLOSET
D.S.	DOWNSPOUT	LT.WT.	LIGHT WEIGHT	R.C.P.	REINFORCED CONCRETE PIPE	W.H.	WATER HEATER
DWG.	DRAWING	LF	LINEAR FEET	REQD.	REQUIRED	WT.	WEIGHT
D.F.	DRINKING FOUNTAIN	LTL.	LINTEL	RES.	RESILIENT	W.W.F.	WELDED WIRE FABRIC
D.I.P.	DUCTILE IRON PIPE	LVR.	LOUVER	R.B.	RESILIENT BASE	W/	WITH
		LG.	LONG	RET.	RETURN	W/O	WITHOUT
EA.	EACH			R.A.	RETURN AIR	WD.	WOOD
E.W.	EACH WAY	M.D.H.	MAGNETIC DOOR HOLDER	REV.	REVISION	WB	WOOD BASE
ELEC.	ELECTRIC	M.H.	MANHOLE	R.H.	RIGHT HAND		
E.C.	ELECTRIC CONTRACTOR	MFGR.	MANUFACTURER	R.O.W.	RIGHT OF WAY	XFE	EXISTING FIRE EXTINGUSIHER
ELEV.	ELEVATION	MARB.	MARBLE	RVT.	RIVET	CABINET	
EQ.	EQUAL	MT	MARBLE TILE	R.D.	ROOF DRAIN		
EQUIP.	EQUIPMENT	MKRBD.	MARKER BOARD	RF.H.	ROOF HATCH		
E.B.O.	EQUIPMENT BY OWNER			R.V.	ROOF VENT		
E.F.	EXHAUST FAN						

PLAN SYMBOLS

ALL SYMBOLS NOT NECESSARILY USED

EXISTING WALL TO REMAIN

NEW CONSTRUCTION - REFER TO WALL TYPES

NEW DOOR - SEE DOOR SCHEDULE FOR ADDITIONAL INFORMATION

REFERENCE SYMBOLS

ALL SYMBOLS NOT NECESSARILY USED

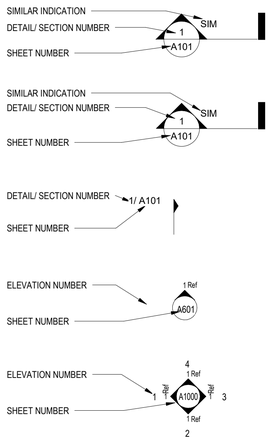

WALL SECTION

BUILDING SECTION

DETAIL SECTION

EXTERIOR ELEVATION

INTERIOR ELEVATION

LARGE SCALE BLOWUP OF PLAN OR DETAIL

PARTITION TYPE

DOOR SYMBOL

WINDOW/ LOUVER SYMBOL

ROOM NAME AND NUMBER

KEYNOTE SYMBOLS

LEVEL ELEVATION

COLUMN GRID BUBBLE

MATCH LINE

REVISION

EQUIPMENT TAG

MATERIALS LEGEND

ALL MATERIALS NOT NECESSARILY USED

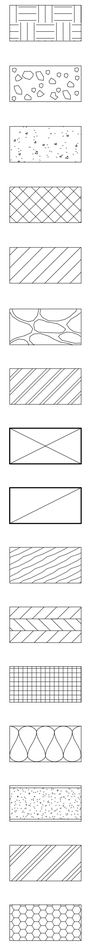

EARTH

POROUS FILL

CONCRETE

C.M.U.

BRICK

STONE

STRUCTURAL STEEL

ROUGH LUMBER

BLOCKING

FINISHED WOOD

PLYWOOD

RIGID INSULATION

BATT INSULATION

GYPSUM DRYWALL

ALUMINUM

POLYCARBONATE

CJS ARCHITECTS

BUFFALO | ROCHESTER
www.cjsarchitects.com

ARCHITECT
CJS ARCHITECTS
755 SENECA STREET, BUFFALO, NY 14210
(716)716.856.6448)

STRUCTURAL ENGINEER
TREDO ENGINEERS
755 SENECA STREET, BUFFALO, NY 14210
(716)716.876.7147)

MEP.FP ENGINEER
BUFFALO ENGINEERING, P.C.
4245UNION ROAD, SUITE 204 BUFFALO, NY 14425
(716.633.5300)

CIVIL ENGINEER
TREDO ENGINEERS
755 SENECA STREET, BUFFALO, NY 14210
(716)716.876.7147)

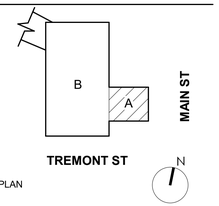

KEY PLAN

RIVIERA THEATRE AND ORGAN PRESERVATION SOCIETY

RIVIERA THEATRE GREEN ROOM

67 WEBSTER ST.
NORTH TONAWANDA, NY
14120

REV. #	DESCRIPTION	DATE

JOB NO.	2545
SCALE	1/4" = 1'-0"
ISSUE DATE	10/21/2026
DRAWN BY	XXX
CHECKED BY	XXX

THIS IS A SINGLE SHEET OF A COHESIVE SET OF CONSTRUCTION DOCUMENTS (INCLUDING DRAWINGS AND SPECIFICATIONS). INTERPRETATION OF THE INFORMATION AS PRESENTED SHOULD BE BASED ON THE ENTIRE SET OF DOCUMENTS.

DRAWING TITLE

SYMBOLS, ABBREVIATIONS & GEN. NOTES

A-001

100% CONSTRUCTION DOCUMENTS

CODE REVIEW LEGEND

ALL SYMBOLS NOT NECESSARILY USED

- Room name — ROOM NAME
- 101 — ROOM NUMBER
- Occ:Occ — OCCUPANCY CLASSIFICATION
- OcLoad:ppl — OCCUPANT LOAD
- 150 SF — UNIT AREA
- 1-HR RATED PARTITION
- 2-HR RATED PARTITION
- 1-HR RATED FLOOR / ROOF
- 2-HR RATED FLOOR / ROOF
- TRAVEL DISTANCE
- MIN. 50 STC RATED DEMISING WALL
- EXIT — EXIT LOCATION
- EXIT DISCHARGE — EXIT DISCHARGE LOCATION

EGRESS CAPACITY

- # / # — REQUIRED WIDTH / PROVIDED WIDTH
- # / # — OCCUPANT LOAD SERVED / DOOR SIZE
- EXIT — ADA ACCESSIBLE ENTRANCE
- EW — EMERGENCY ESCAPE WINDOW
- EXIT SIGN
- ADA ACCESSIBLE RESTROOM
- DRINKING FOUNTAIN / WATER BOTTLE FILLING STATION
- FE — FIRE EXTINGUISHER LOCATION - REF SPECS.
- FD 20 — 20-MIN RATED DOOR
- FD 90 — 90-MIN RATED DOOR

OCCUPANCY LEGEND

ALL SYMBOLS NOT NECESSARILY USED
IBC TABLE 1004.1.2

- STORAGE/MECHANICAL
- ASSEMBLY - FIXED SEATS
- BUSINESS

BUILDING DATA & CODE SUMMARY

BUILDING CODE:	2025 BUILDING CODE OF NEW YORK STATE (BCNYS), 2025 ENERGY CONSERVATION CONSTRUCTION CODE (ECCCNYS)		
OCCUPANCY CLASSIFICATION:			
(2025 BCNYS 304)	BUSINESS GROUP B (303.1.2 LESS THAN 50 PPL)		
CONSTRUCTION TYPE:			
	TYPE VB (B)		
BUILDING LIMITATIONS:			
		ALLOWABLE	ACTUAL
TABLE 504.3	BUILDING HEIGHT (FEET)		
	(B)	70'	19'-6"
TABLE 504.4	BUILDING HEIGHT (STORIES)		
	*S - 903.3.1.1 (B)	4	1
TABLE 506.2	BUILDING AREA (GROSS SQUARE FEET)		
	GRADE (B)	VA - 72,000 SF	2,177 SF
TABLE 506.3	BUILDING AREA (FRONTAGE INCREASE STUDY AND CALCULATIONS REFER TO LS-000)		
	FIRST FLOOR (B)	VA - 18,000 SF/FLR	2,177 SF
	SEPARATED OCCUPANCIES		
TABLE 508.4	A + B (NFPA 13)	1	HOUR(S)
FIRE RESISTANCE RATINGS:	**TYPE VB**		
TABLE 601	STRUCTURAL FRAME	0	HOUR(S)
TABLE 601	BEARING WALLS		
	EXTERIOR	0	HOUR(S)
	INTERIOR	0	HOUR(S)
TABLE 601	NON-BEARING WALLS		
TABLE 601	EXTERIOR	0	HOUR(S)
	INTERIOR	0	HOUR(S)
TABLE 601	FLOOR CONSTRUCTION	0	HOUR(S)
TABLE 601	ROOF CONSTRUCTION	0	HOUR(S)
TABLE 706.4	FIRE WALLS (B)	2	HOUR(S)
SECTION 708.3	FIRE PARTITIONS	1	HOUR(S)
		REQUIED	PROVIDED
OPENINGS: TABLE 705.9	MAX. AREA OF EXTERIOR WALL OPENINGS BASED ON FIRE SEPARATION DISTANCE AND DEGREE OF OPENING PROTECTION		
	FIRE SEPARATION DISTANCE	20 FEET TO 25 FEET	20 FEET
	DEGREE OF OPENING PROTECTION	UNPROTECTED, SPRINKLERED	NFPA 13
	ALLOWABLE AREA	45%	30.1%
FIRE AREAS:		REQUIRED (HR.)	ACTUAL (HR.)
TABLE 707.3.10	OCCUPANCY B	2	2
FIRE PROTECTION SYSTEMS:	**TYPE VB**		
SECTION 903.3.1.2	AUTOMATIC SPRINKLER SYSTEM	NOT REQUIRED	
SECTION 906	PORTABLE FIRE EXTINGUISHER	MIN. 2A RATED EXTINGUISHERS	
	* MIN. 1 EXTINGUISHER PER 11,250 SQ. FT.		
	MAX. TRAVEL DIST. TO EXTINGUISHER = 75'-0" *		
SECTION 907.2.2	FIRE ALARM SYSTEM	NOT REQUIRED	

MEANS OF EGRESS: OCCUPANT LOADS (TABLE 1004.1.2): — NUMBER OF EXITS:

FLOOR	OCC. CLASS.	OCCUPANCY	REQUIRED	ACTUAL
GRADE	(B)	15	02	03
	TOTAL	15		

	WIDTH OF EXITS	REQUIRED	ACTUAL
TABLE 1020.3	CORRIDORS	36"	65"
TABLE 1017.2	EXIT ACCESS TRAVEL DISTANCE W/ SPRINKLER SYSTEM		
	B OCCUPANCY	300' MAX	45' - 7"
SECTION 1020.5	DEAD END LIMIT		
	*SPRINKLED B	<50'-0"	N/A

PLUMBING FIXTURE CALCULATIONS (PCNYS TABLE 403.1):
1. NEW BUILDING

1.	OCCUPANCY (ACTUAL)	B = 15 OCCUPANTS			
	FIXTURES	REQUIRED		PROVIDED	
		FEMALE	MALE	FEMALE	MALE
	WATER CLOSETS	1:25	1:25	2	2
	URINALS	0	0	0	0
	LAVATORIES	1:40	1:40	2	2
	SERVICE SINK	1		1	
	WATER FOUNTAIN	1:100		1	

CONSTRUCTION CLASSIFICATION (TABLE 705.5)
FIRE-RESISTANCE RATING REQUIREMENTS FOR EXTERIOR WALLS BASED ON FIRE SEPARATION DISTANCE[a, d, g]

FIRE SEPARATION DISTANCE = X (feet)	TYPE OF CONSTRUCTION	OCCUPANCY GROUP B
X < 5[b]	IA , VA	1
5 \< X < 10	IA , VA	1
10 \< X < 30	IA , VA	1[c]
X >/ 30	IIB , VA	0

ENERGY CONSERVATION:

TO THE BEST OF THE KNOWLEDGE, BELIEF AND PROFESSIONAL JUDGEMENT OF CJS ARCHITECTS, THE DRAWINGS AND SPECIFICATIONS CONTAINED HEREIN COMPLY WITH THE REQUIREMENTS OF THE 2025 ENERGY CONSERVATION CONSTRUCTION CODE OF NEW YORK STATE.

OPAQUE THERMAL ENVELOPE - TABLE 402.1.3	CLIMATE ZONE 5
ROOF	R-33ci - U-0.030 MIN R35 PROVIDED
WALLS ABOVE GRADE	MASS - R13.3ci, WOOD FRAMED - R11+R10ci - U-0.048
WALLS BELOW GRADE	R7.5ci - C-0.019 - MIN R10 PROVIDED
SLAB ON GRADE FLOOR	UNHEATED - R15 FOR 24" BELOW, HEATED - R20 FOR 48" BELOW
OPAQUE DOORS	NON SWINGING - U-0.31 SWINGING DOORS - U-0.37
BUILDING ENVELOPE FENESTRATION- TABLE 402.1.1.1	CLIMATE ZONE 5
ENTRANCE DOORS	U-0.7
SHGC - PF <0.2 , SEW-0.40, N-0.53 REQUIRED, MAX 0.35 PROVIDED (TABLE C405.5)	

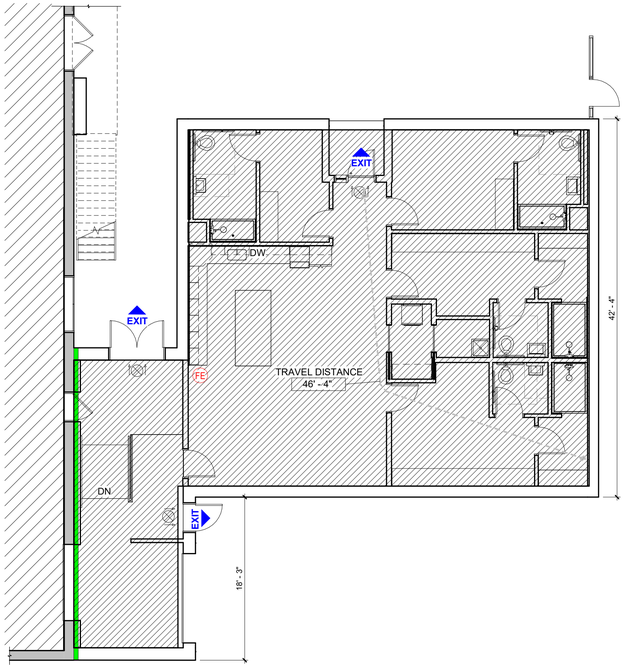

1 LS-01 LIFE SAFETY PLAN
1/8" = 1'-0"

ORIGINAL DOCUMENT PRODUCED IN COLOR - DO NOT REPRODUCE IN BLACK & WHITE, DO NOT UTILIZE FOR CONSTRUCTION PURPOSES IF REPRODUCED IN BLACK & WHITE.

CJS ARCHITECTS
BUFFALO | ROCHESTER
www.cjsarchitects.com

ARCHITECT
CJS ARCHITECTS
755 SENECA STREET, BUFFALO, NY 14210
(716)716.856.6448)

STRUCTURAL ENGINEER
TREDO ENGINEERS
755 SENECA STREET, BUFFALO, NY 14210
(716)716.876.7147)

MEP.FP ENGINEER
BUFFALO ENGINEERING, P.C.
4245UNION ROAD, SUITE 204 BUFFALO, NY 14425
(716.633.5300)

CIVIL ENGINEER
TREDO ENGINEERS
755 SENECA STREET, BUFFALO, NY 14210
(716)716.876.7147)

REGISTERED ARCHITECT — ANDREW E. STRAUB — 019747 — STATE OF NEW YORK

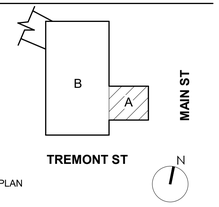

KEY PLAN

RIVIERA THEATRE AND ORGAN PRESERVATION SOCIETY

RIVIERA THEATRE GREEN ROOM

67 WEBSTER ST.
NORTH TONAWANDA, NY
14120

REV. #	DESCRIPTION	DATE

JOB NO.	2545
SCALE	As indicated
ISSUE DATE	10/21/2026
DRAWN BY	XXX
CHECKED BY	XXX

THIS IS A SINGLE SHEET OF A COHESIVE SET OF CONSTRUCTION DOCUMENTS (INCLUDING DRAWINGS AND SPECIFICATIONS). INTERPRETATION OF THE INFORMATION AS PRESENTED SHOULD BE BASED ON THE ENTIRE SET OF DOCUMENTS.

DRAWING TITLE

LIFE SAFETY

LS-01

100% CONSTRUCTION DOCUMENTS

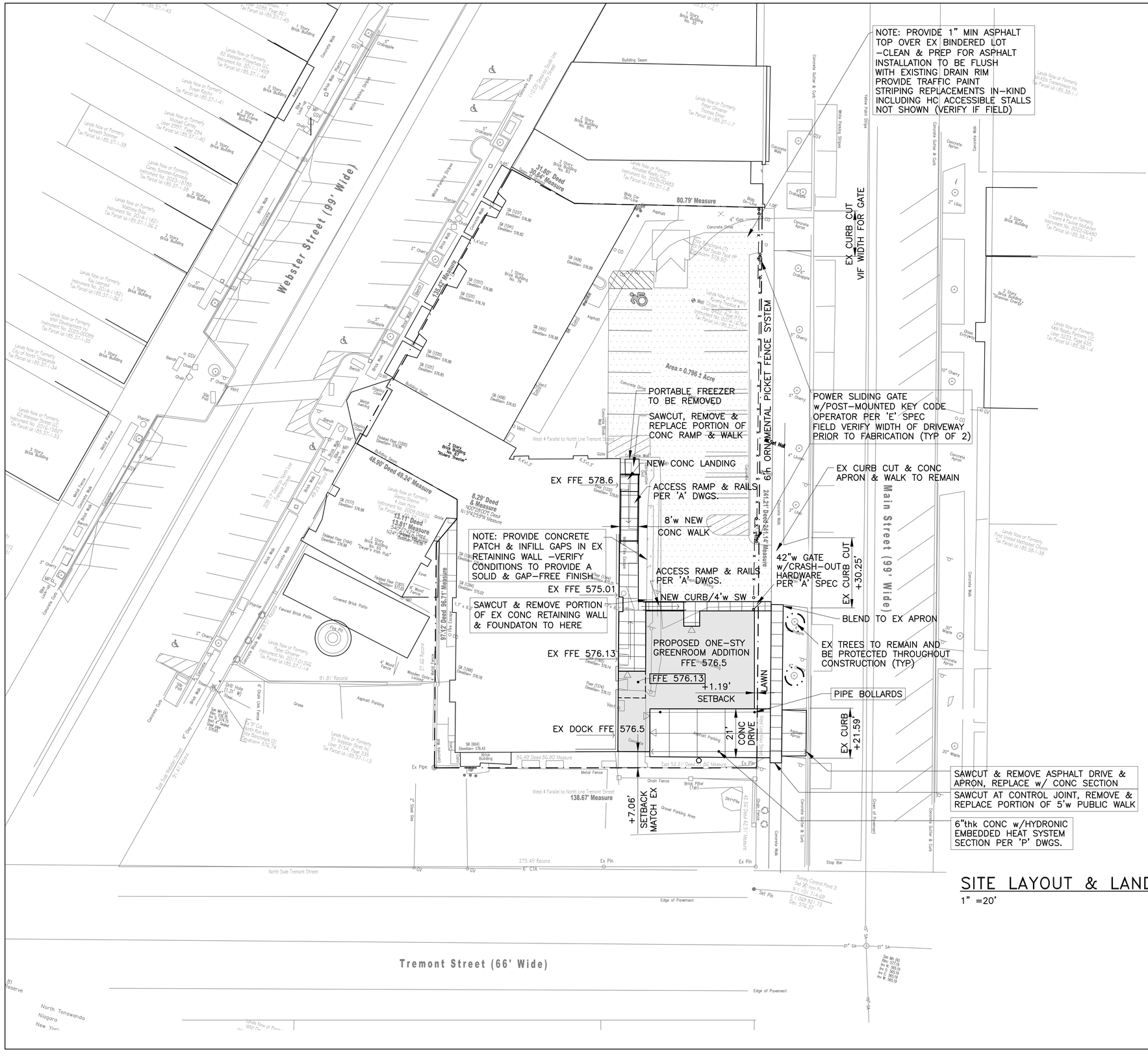

GENERAL SITE NOTES

1. ALL SANITARY SEWER, STORM SEWER AND OTHER WORK SHALL BE IN ACCORDANCE WITH THE LATEST RULES AND REGULATIONS OF THE CITY OF NORTH TONAWANDA, AND NEW YORK STATE DEPT. OF TRANSPORTATION WORK PERMIT SPECIFICATIONS.
2. INSTALL ALL MATERIALS TO THE MANUFACTURER'S RECOMMENDATIONS AND BEST STANDARDS OF THE TRADE INVOLVED.
3. SUBSTITUTIONS SHALL BE MADE ONLY WITH OWNER APPROVAL AND SHALL BE EQUIVALENT QUALITY TO WHAT IS SPECIFIED.
4. WORK SHALL BE COMPLETED IN STRICT ACCORDANCE WITH ALL LOCAL CODES AND OSHA SAFETY RULES AND REGULATIONS.
5. VERIFY ALL EXISTING CONDITIONS AND DIMENSIONS AT THE SITE. NOTIFY OWNER OF ANY DISCREPANCIES IN CONDITIONS SHOWN ON THE DRAWINGS PRIOR TO PROCEEDING WITH THE WORK.
6. CONTRACTORS SHALL BE RESPONSIBLE FOR THE PROTECTION OF ANY EXISTING STRUCTURES TO REMAIN AND ANY FINISH MATERIAL INSTALLED WHILE WORKING ON OTHER COMPONENTS.
7. CONTRACTOR SHALL KEEP THE JOB SITE FREE OF DEBRIS AND MAKE FINAL CLEANUP TO THE SATISFACTION OF THE OWNER.
8. CONTRACTOR SHALL ASCERTAIN THE LOCATION OF ALL UTILITIES PRIOR TO CONSTRUCTION SO THAT THIS WORK DOES NOT DISTURB EXISTING LINES AND/OR INSTALLATIONS. COORDINATE ALL WORK WITH THE APPLICABLE UTILITY COMPANIES.
9. CONTRACTOR SHALL OBTAIN AND PAY FOR ALL PERMITS NECESSARY TO PERFORM THE WORK.
10. DURING CONSTRUCTION, THE CONTRACTOR SHALL INSTALL SILT FENCE OR COMPOST FILTER SOCK STAKED–IN TO CONTROL EROSION FROM THE SITE.
11. REFER TO ARCHITECTURAL DRAWINGS FOR EXACT BUILDING DIMENSIONS AND MEP DWGS. FOR UTILITY CONNECTIONS.
12. ALL UTILITY TRENCHES UNDER PAVEMENT, CURBS, SIDEWALKS, AND DRIVEWAYS SHALL BE FULLY BACKFILLED WITH No 2 CRUSHER RUN STONE AND PROPERLY COMPACTED TO AVOID SETTLEMENT.
13. CONTRACTOR SHALL REPLACE IN KIND ANY EXISTING IMPROVEMENTS TO REMAIN THAT ARE DAMAGED DURING CONSTRUCTION. THIS SHALL INCLUDE, BUT NOT BE LIMITED TO, CURBS, ROAD PAVEMENTS, SIDEWALKS, LANDSCAPING, LAWNS AND EXISTING UTILITIES.

SITE LAYOUT & LANDSCAPE PLAN

1" =20'

CJS ARCHITECTS
BUFFALO | ROCHESTER
www.cjsarchitects.com

ARCHITECT
CJS ARCHITECTS
755 SENECA STREET, BUFFALO, NY 14210
(716)716.856.6448)

CIVIL,STRUCTURAL ENGINEER
TREDO ENGINEERS
755 SENECA STREET
BUFFALO, NY 14210
(716)716.876.7147)

MEP,FP ENGINEER
BUFFALO ENGINEERING, P.C.
4245UNION ROAD, SUITE 204 BUFFALO, NY 14425
(716.633.5300)

COPYRIGHT©2026 TREDO ENGINEERS
ALL RIGHTS RESERVED. NO PART OF THIS DRAWING MAY BE REPRODUCED OR COPIED IN ANY FORM BY ANY MEANS WITHOUT THE WRITTEN PERMISSION OF THE ENGINEERS.

REPRODUCTION OF THIS DRAWING FOR USE IN THE PRODUCTION OF SHOP DRAWINGS FROM THESE DRAWINGS IS EXPRESSLY FORBIDDEN.

UNAUTHORIZED ALTERATION AND/OR DUPLICATION OF THIS DRAWING IS A VIOLATION OF SECTION 7209, PROVISION 2, OF THE NEW YORK STATE EDUCATION LAW.

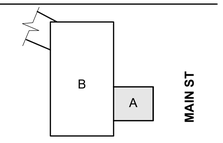

KEY PLAN

RIVIERA THEATRE

RIVIERA THEATRE GREEN ROOM

67 WEBSTER ST.
NORTH TONAWANDA, NY
14120

REV. #	DESCRIPTION	DATE
–	–	–

JOB NO.	(T.E. JOB #25-91)
SCALE	AS NOTED
ISSUE DATE	10.22.26
DRAWN BY	avm
CHECKED BY	AVM

THIS IS A SINGLE SHEET OF A COHESIVE SET OF CONSTRUCTION DOCUMENTS (INCLUDING DRAWINGS AND SPECIFICATIONS). INTERPRETATION OF THE INFORMATION AS PRESENTED SHOULD BE BASED ON THE ENTIRE SET OF DOCUMENTS.

DRAWING TITLE

SITE LAYOUT & LANDSCAPE PLAN

SP101

CONSTRUCTION DOCUMENTS

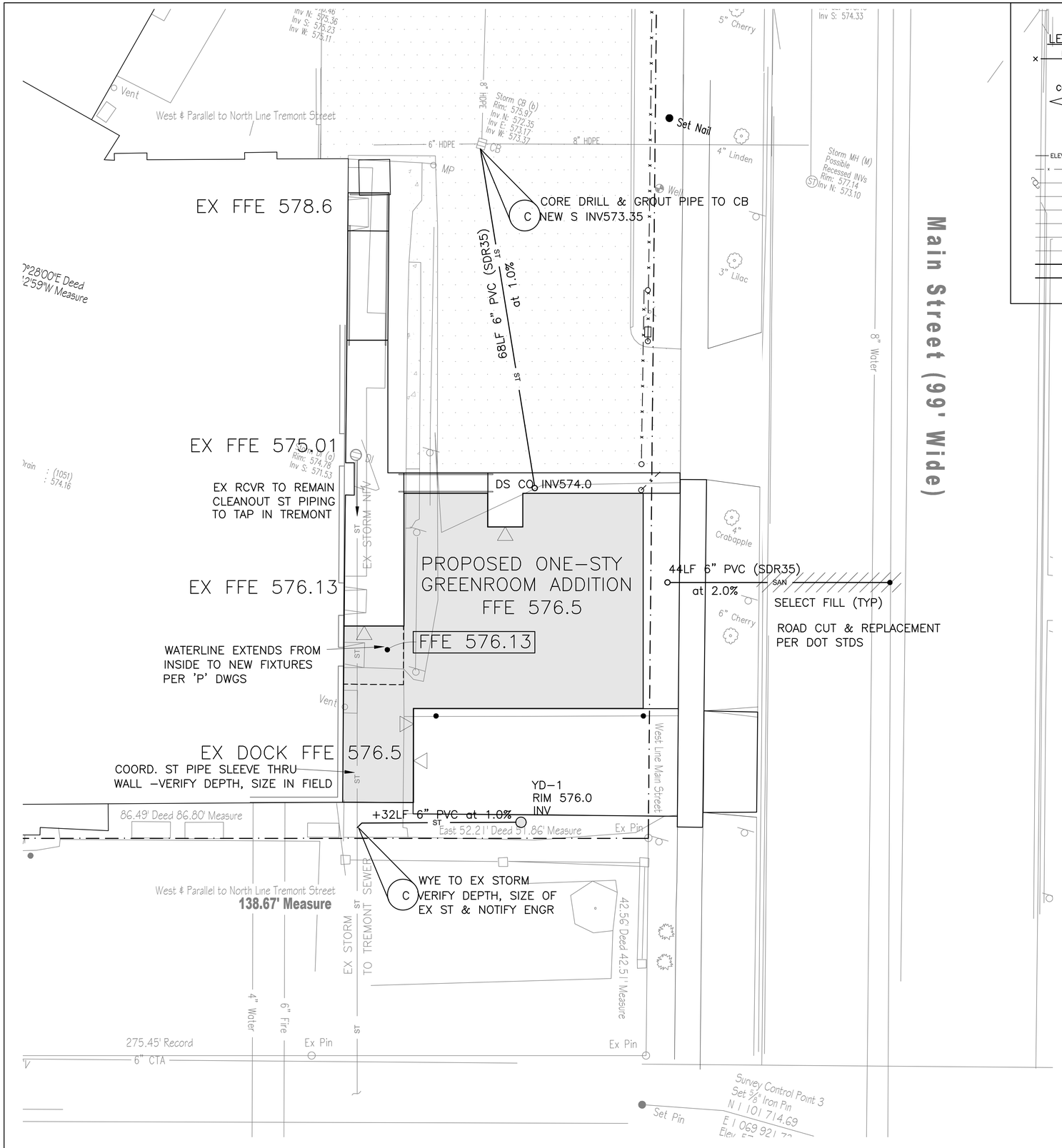

LEGEND:

ELEV	DENOTES PROPOSED SPOT ELEVATIONS	ELEV	DENOTES EXISTING SPOT ELEVATIONS
		D	DENOTES EXISTING STORM SEWER DROP INLET
CO	DENOTES PROPOSED CLEANOUT	ST	DENOTES EXISTING STORM SEWER MANHOLE
C	DENOTES CONNECTION TO EXISTING UTILITY	SAN	DENOTES EXISTING SANITARY SEWER MANHOLE
			DENOTES EXISTING HYDRANT
			DENOTES EXISTING LIGHT POLE
RD	DENOTES PROPOSED ROOF DRAIN		DENOTES EXISTING WATER VALVE
ELEV	DENOTES NEW CONTOURS	ELEV	DENOTES EXISTING CONTOURS
			DENOTES EXISTING FENCE
OHE		OHE	DENOTES EXISTING UTILITY POLE AND OVERHEAD UTILITIES
ST		ST	DENOTES EXISTING STORM SEWER LINE
SAN		SAN	DENOTES EXISTING SANITARY SEWER LINE
W		W	DENOTES EXISTING WATER LINE
E		E	DENOTES EXISTING ELECTRIC LINE
G		G	DENOTES EXISTING GAS LINE
ST			DENOTES PROPOSED STORM SEWER LINE
SAN			DENOTES PROPOSED SANITARY SEWER LINE

PARTIAL DRAINAGE &
UTILITIES PLAN
1" =10'

CJS ARCHITECTS
BUFFALO | ROCHESTER
www.cjsarchitects.com

ARCHITECT
CJS ARCHITECTS
755 SENECA STREET, BUFFALO, NY 14210
(716)716.856.6448)

CIVIL,STRUCTURAL ENGINEER
TREDO ENGINEERS
755 SENECA STREET
BUFFALO, NY 14210
(716)716.876.7147)

MEP,FP ENGINEER
BUFFALO ENGINEERING, P.C.
4245UNION ROAD, SUITE 204 BUFFALO, NY 14425
(716.633.5300)

COPYRIGHT©2026 TREDO ENGINEERS
ALL RIGHTS RESERVED. NO PART OF THIS DRAWING MAY BE REPRODUCED OR COPIED IN ANY FORM BY ANY MEANS WITHOUT THE WRITTEN PERMISSION OF THE ENGINEERS.

REPRODUCTION OF THIS DRAWING FOR USE IN THE PRODUCTION OF SHOP DRAWINGS OR FIELD DRAWINGS IS EXPRESSLY FORBIDDEN.

UNAUTHORIZED ALTERATION AND/OR DUPLICATION OF THIS DRAWING IS A VIOLATION OF SECTION 7209, PROVISION 2, OF THE NEW YORK STATE EDUCATION LAW.

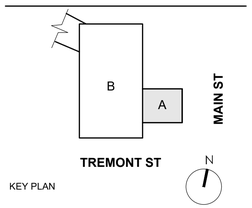

KEY PLAN

RIVIERA THEATRE

RIVIERA THEATRE GREEN ROOM

67 WEBSTER ST.
NORTH TONAWANDA, NY
14120

REV. #	DESCRIPTION	DATE
–	–	–

JOB NO.	(T.E. JOB #25-91)
SCALE	AS NOTED
ISSUE DATE	10.22.26
DRAWN BY	avm
CHECKED BY	AVM

THIS IS A SINGLE SHEET OF A COHESIVE SET OF CONSTRUCTION DOCUMENTS (INCLUDING DRAWINGS AND SPECIFICATIONS). INTERPRETATION OF THE INFORMATION AS PRESENTED SHOULD BE BASED ON THE ENTIRE SET OF DOCUMENTS.

DRAWING TITLE

SITE DRAINAGE & UTILITIES PLAN

SP102

CONSTRUCTION DOCUMENTS

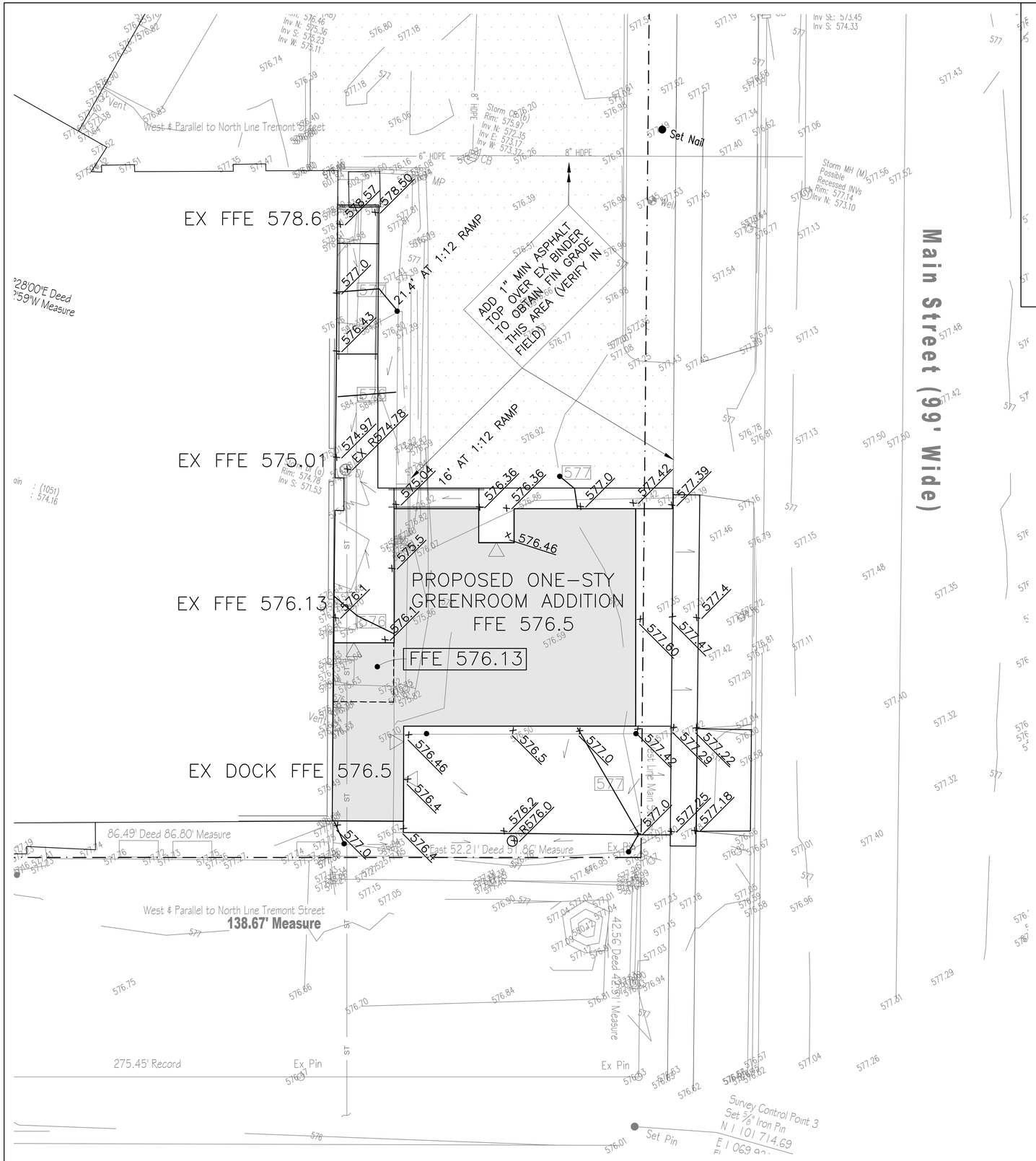

PARTIAL SITE GRADING PLAN

1" =10'

LEGEND:

× ELEV	DENOTES PROPOSED SPOT ELEVATIONS	* ELEV	DENOTES EXISTING SPOT ELEVATIONS
		DI	DENOTES EXISTING STORM SEWER DROP INLET
CO ○	DENOTES PROPOSED CLEANOUT	ST	DENOTES EXISTING STORM SEWER MANHOLE
Ⓒ	DENOTES CONNECTION TO EXISTING UTILITY	SAN	DENOTES EXISTING SANITARY SEWER MANHOLE
			DENOTES EXISTING HYDRANT
			DENOTES EXISTING LIGHT POLE
RD	DENOTES PROPOSED ROOF DRAIN	⊗	DENOTES EXISTING WATER VALVE
ELEV	DENOTES NEW CONTOURS	ELEV	DENOTES EXISTING CONTOURS
			DENOTES EXISTING FENCE
OHE		OHE	DENOTES EXISTING UTILITY POLE AND OVERHEAD UTILITIES
ST		ST	DENOTES EXISTING STORM SEWER LINE
SAN		SAN	DENOTES EXISTING SANITARY SEWER LINE
W		W	DENOTES EXISTING WATER LINE
E		E	DENOTES EXISTING ELECTRIC LINE
G		G	DENOTES EXISTING GAS LINE
ST			DENOTES PROPOSED STORM SEWER LINE
SAN			DENOTES PROPOSED SANITARY SEWER LINE

CJS ARCHITECTS
BUFFALO | ROCHESTER
www.cjsarchitects.com

ARCHITECT
CJS ARCHITECTS
755 SENECA STREET, BUFFALO, NY 14210
(716)716.856.6448)

CIVIL,STRUCTURAL ENGINEER
TREDO ENGINEERS
755 SENECA STREET
BUFFALO, NY 14210
(716)716.876.7147)

MEP,FP ENGINEER
BUFFALO ENGINEERING, P.C.
4245UNION ROAD, SUITE 204 BUFFALO, NY 14425
(716.633.5300)

COPYRIGHT©2026 TREDO ENGINEERS
ALL RIGHTS RESERVED. NO PART OF THIS DRAWING MAY BE REPRODUCED OR COPIED IN ANY FORM BY ANY MEANS WITHOUT THE WRITTEN PERMISSION OF THE ENGINEERS.

REPRODUCTION OF THIS DRAWING FOR USE IN THE PRODUCTION OF SHOP DRAWINGS OR OTHER DRAWINGS IS EXPRESSLY FORBIDDEN.

UNAUTHORIZED ALTERATION AND/OR DUPLICATION OF THIS DRAWING IS A VIOLATION OF SECTION 7209, PROVISION 2, OF THE NEW YORK STATE EDUCATION LAW.

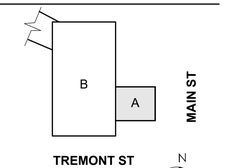

KEY PLAN

RIVIERA THEATRE

RIVIERA THEATRE GREEN ROOM

67 WEBSTER ST.
NORTH TONAWANDA, NY
14120

REV. #	DESCRIPTION	DATE
–	–	–

JOB NO.	(T.E. JOB #25-91)
SCALE	AS NOTED
ISSUE DATE	10.22.26
DRAWN BY	avm
CHECKED BY	AVM

THIS IS A SINGLE SHEET OF A COHESIVE SET OF CONSTRUCTION DOCUMENTS (INCLUDING DRAWINGS AND SPECIFICATIONS). INTERPRETATION OF THE INFORMATION AS PRESENTED SHOULD BE BASED ON THE ENTIRE SET OF DOCUMENTS.

DRAWING TITLE

SITE GRADING PLAN

SP103

CONSTRUCTION DOCUMENTS

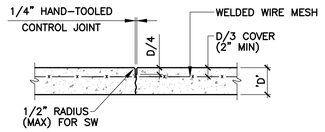

5 CONTROL JOINT IN EXTERIOR CONC PAVEMENT

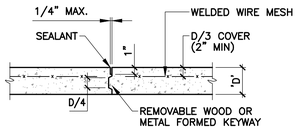

6 CONSTRUCTION JOINT IN EXTERIOR CONC PAVEMENT

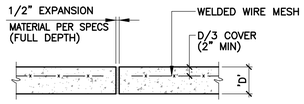

7 EXPANSION JOINT IN EXTERIOR CONC PAVEMENT

4 not used

3 not used

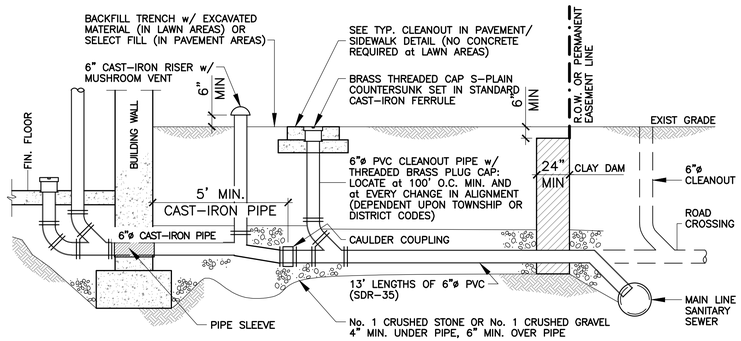

10 COMMERCIAL SERVICE DETAIL

COMMERCIAL SERVICE NOTES:

1. PVC PIPE MATERIAL SHALL BE MANUFACTURED IN ACCORDANCE WITH THE LATEST REQUIREMENTS OF ASTM D-3033 / D-3034. CAST-IRON PIPE MATERIAL SHALL BE EXTRA HEAVY ASTM A74-42.
2. PURSUANT TO DISTRICT RULES AND REGULATIONS, PIPE SHALL BE LAID at 1/4" PER FOOT GRADE. ANY VARIANCE MUST BE APPROVED BY THE DISTRICT MANAGER. IN NO CASE SHALL PIPE SLOPE BE LESS THAN 1/8" PER FOOT.
3. VENTS AND CLEANOUTS MUST BE INSTALLED IN LAWN AREAS, NOT IN SIDEWALK OR DRIVEWAY AREAS, PREFERABLY BETWEEN THE CURB OR EDGE OF PAVEMENT AND THE SIDEWALK.
4. CONCRETE ENCASEMENT IS REQUIRED IF COVER DEPTH IS LESS THAN 4'-0" UNDER PAVED AREAS.
5. SELECT BACKFILL IS REQUIRED UNDER PAVED AREAS.
6. MINIMUM DEPTH OF COVER SHALL BE 3'-0".
7. A GREASE TRAP AND OIL SEPARATOR IS REQUIRED WHERE APPLICABLE -REF. KITCHEN DWGS.
8. CLEANOUT MEASUREMENTS SHALL START FROM THE CENTERLINE OF THE MAIN SEWER FOR NEARSIDE LATERALS, AND FROM THE 0" CLEANOUT FOR FARSIDE CONNECTIONS. A CLEANOUT MAY BE REQUIRED FOR ANY ABRUPT CHANGES IN LATERAL DIRECTION FLOW.
9. A 6" CLEANOUT IS REQUIRED at THE R.O.W. WHENEVER THE MAIN SEWER IS UNDER THE PAVEMENT LIMITS OR at THE FAR SIDE OF PAVEMENT.
10. ANY SEWER LAID THROUGH OR OVER A SEPTIC TANK MUST BE CAST-IRON (SEPTIC TANK MUST BE FILLED WITH BANK-RUN GRAVEL.
11. ANY SEPTIC TANK THAT IS REMOVED FROM SERVICE MUST BE PUMPED OUT AND CRUSHED, OR FILLED WITH BANK-RUN GRAVEL, WHEN SEPTIC SYSTEM IS BEING CONVERTED TO A SANITARY SEWER LINE.
12. NO SEWER WORK SHALL BE BACKFILLED BEFORE THE WORK HAS BEEN INSPECTED BY A DISTRICT INSPECTOR.
13. ANY EXCAVATION TO BE LEFT OPEN OVERNIGHT SHALL BE COMPLETELY ENCLOSED IN FENCING, OR WHERE NECESSARY COVERED WITH STEEL PLATES.
14. DOWNSPOUTS, SUMP PUMPS, AND FOOTING DRAINS ARE NOT PERMITTED TO BE CONNECTED TO THE SANITARY LATERAL.
15. NO INSPECTION WILL BE PROVIDED WITHOUT A PERMIT. INSPECTIONS REQUIRE 24 HR. ADVANCE NOTICE FOR SCHEDULING.
16. FOR NEW STRUCTURES, NO CONNECTION SHALL BE MADE UNTIL BUILDING BASEMENT FLOOR IS POURED.
17. A DISTRICT INSPECTOR MUST BE PRESENT WHEN A CAP OR PLUG IS PULLED FROM A WYE OR LATERAL.

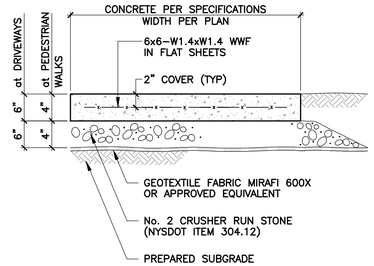

NOTE: CONC. SHALL BE 4000 PSI at 28-DAYS, 6% AIR-ENTRAINED, 4" MAX. SLUMP-PROVIDE LT. BROOM FINISH PERPENDICULAR TO DIRECTION OF TRAFFIC

2 TYPICAL CONCRETE SIDEWALK

ITEM	DESCRIPTION	NYSDOT REF.	DEPTH
1	TOP COURSE	402.099803-9.5 F2-80	1-1/2"
2	BINDER COURSE	402.198203-19 F9-80	2"
3	NOT USED		
4	SUBBASE COURSE	304.12000	8"
5	GEOTEXTILE FABRIC (NONWOVEN/HEAT BONDED)		
6	TACK COAT ITEM	407.01020	

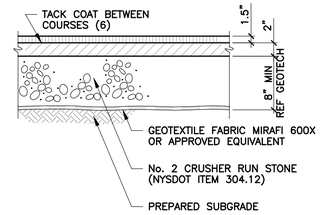

1 TYPICAL TYPE I BITUMINOUS PAVEMENT SECTION

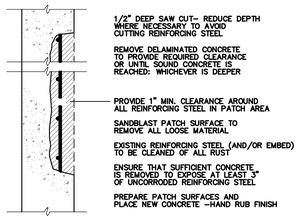

9 TYP. WALL OR COLUMN DELAMINATION REPAIR
NO SCALE

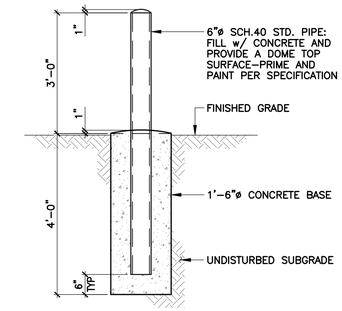

8 STEEL PIPE BOLLARD

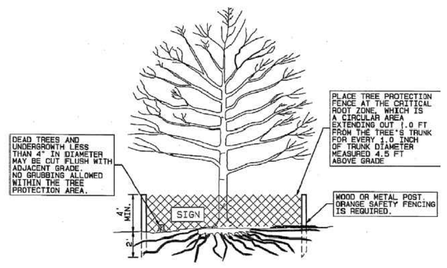

NOTES:
1. SEE PLANS FOR LOCATION OF ALL TREE PROTECTION FENCES.
2. ALL TREE PROTECTION DEVICES MUST BE INSTALLED PRIOR TO LAND DISTURBANCE, INCLUDING THE CUTTING OF ANY TREES, AND MUST BE INSPECTED BY THE OWNER'S CONSTRUCTION REPRESENTATIVE
3. NO GRADING, TRENCHING, FILLING OR STORING OF MATERIALS IS TO OCCUR IN THE TREE PROTECTION AREA.
4. TREE PROTECTION FENCE MAY NOT BE REMOVED WITHOUT THE APPROVAL OF THE OWNER'S CONSTRUCTION REPRESENTATIVE
5. THE TREE PRESERVATION AREA SHOULD BE DESIGNATED WITH SIGNS POSTED VISIBLY ON THE OUTSIDE OF THE FENCED-IN AREA. SIGNS MAY NOT BE POSTED ON THE TREES.

14 TREE PROTECTION

BLACK ALUMINUM ORNAMENTAL FENCING
VERTICAL BLADE Model No. FDCI211001 BY FENCE DEPOT OR ACCEPTED EQUIVALENT
FINAL SELECTION BY ARCHITECT
PROVIDE MAN-GATES & HARDWARE OF A SINGLE SYSTEM
INSTALL FENCING PER MANUFACTURERS RECOMMENDATIONS-

PROVIDE SLIDING VEHICLE GATE AND CONTROLLER (1 HP MIN.) INCLUDE KNOX BOX KEY HOLDER AND/OR LOCK CODE COORD. w/FIRE CHIEF REFER TO 'E' DWGS FOR POWER & CONTROLLER SPEC

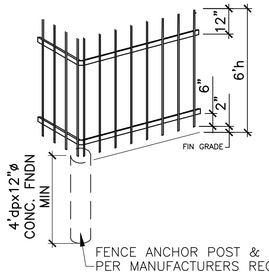

FENCE ANCHOR POST & EMBED DEPTH PER MANUFACTURERS RECOMMENDATIONS

13 ORNAMENTAL FENCE BASIS OF DESIGN

12 not used

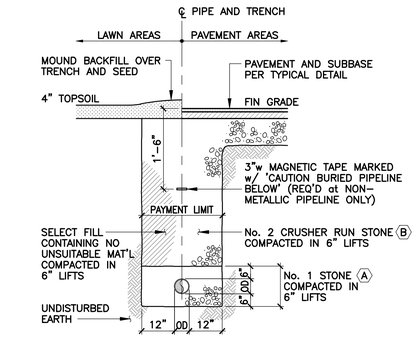

NOTES:
1. PIPE SHALL BE IN ACCORDANCE w/ MANUFACTURER'S RECOMMENDATIONS
2. TRENCHING OPERATIONS SHALL INCLUDE ALL NECESSARY DEWATERING
3. TRENCH DETAILS ARE ONLY SHOWN FOR MATERIAL PLACEMENT PURPOSES
4. AN OSHA APPROVED MOVEABLE PROTECTIVE TRENCH SHIELD MAY BE USED.

MATERIALS:
(A) No. 1 STONE WITH A GRADATION CONFORMING TO NYSDOT SECTION 703-02, LATEST EDITION. THE CRUSHED STONE SHALL BE WELL GRADED WITH NO PARTICLES LARGER THAN (1) INCH AND HAVING A MAX. GRADATION MEETING THE LIMITS DESCRIBED IN THE SPECIFICATIONS. NO SLAG SHALL BE USED IN PLACE OF MATERIAL 'A'.
(B) No. 2 CRUSHER RUN STONE OR No. 2 RUN OF CRUSHED GRAVEL WITH A GRADATION CONFORMING WITH NYSDOT SECTION 304-2.02 TYPE 4 AND NYSDOT SECTION 703-02 (COMPACTED IN 6" LIFTS TO 90% DENSITY). NO SLAG SHALL BE USED IN PLACE OF MATERIAL 'B'.

11 UTILITY TRENCH SECTION

CJS ARCHITECTS
BUFFALO | ROCHESTER
www.cjsarchitects.com

ARCHITECT
CJS ARCHITECTS
755 SENECA STREET, BUFFALO, NY 14210
(716)716.856.6448)

CIVIL,STRUCTURAL ENGINEER
TREDO ENGINEERS
755 SENECA STREET
BUFFALO, NY 14210
(716)716.876.7147)

MEP,FP ENGINEER
BUFFALO ENGINEERING, P.C.
4245UNION ROAD, SUITE 204 BUFFALO, NY 14425
(716.633.5300)

COPYRIGHT©2026 TREDO ENGINEERS ALL RIGHTS RESERVED. NO PART OF THIS DRAWING MAY BE REPRODUCED OR COPIED IN ANY FORM BY ANY MEANS WITHOUT THE WRITTEN PERMISSION OF THE ENGINEERS.

REPRODUCTION OF THIS DRAWING FOR USE IN THE PRODUCTION OF SHOP DRAWINGS OR AS CONSTRUCTION DRAWINGS IS EXPRESSLY FORBIDDEN.

UNAUTHORIZED ALTERATION AND/OR DUPLICATION OF THIS DRAWING IS A VIOLATION OF SECTION 7209, PROVISION 2, OF THE NEW YORK STATE EDUCATION LAW.

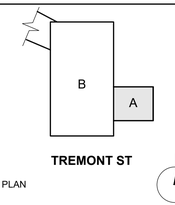

KEY PLAN

RIVIERA THEATRE

RIVIERA THEATRE GREEN ROOM

67 WEBSTER ST.
NORTH TONAWANDA, NY
14120

REV. #	DESCRIPTION	DATE
–	–	–

JOB NO.	(T.E. JOB #25-91)
SCALE	AS NOTED
ISSUE DATE	10.22.26
DRAWN BY	avm
CHECKED BY	AVM

THIS IS A SINGLE SHEET OF A COHESIVE SET OF CONSTRUCTION DOCUMENTS (INCLUDING DRAWINGS AND SPECIFICATIONS). INTERPRETATION OF THE INFORMATION AS PRESENTED SHOULD BE BASED ON THE ENTIRE SET OF DOCUMENTS.

DRAWING TITLE

SITEWORK DETAILS

SP201

CONSTRUCTION DOCUMENTS

DIVISION 1 - GENERAL CONDITIONS

A. ALL WORK SHALL COMPLY WITH THE LATEST ADDITION OF THE BUILDING CODE OF NEW YORK STATE, ACI BUILDING CODE (ACI-318), ASTM STANDARDS, NYSDOT, NYSDEC, AND ANY OTHER APPLICABLE CODES, RULES AND REGULATIONS BY AGENCIES HAVING JURISDICTIONS INCLUDING BUT NOT LIMITED TO THE LOCAL MUNICIPALITY. WHERE CODES OVERLAP, COMPLY WITH THE MORE STRINGENT REQUIREMENTS.

B. THE CONTRACTOR SHALL MAINTAIN INSURANCE AS WILL PROTECT HIM FROM LIABILITY UNDER WORKMAN'S COMPENSATION ACTS AND OTHER EMPLOYEE BENEFITS ACTS IN ACCORDANCE WITH THE LAWS OF NEW YORK STATE, AND FROM LIABILITY FOR DAMAGES BECAUSE OF BODILY INJURY, INCLUDING DEATH AND PROPERTY DAMAGE.

C. CONTRACTOR IS TO REVIEW DRAWINGS AND EXISTING SITE CONDITIONS AND DIMENSIONS FOR SCOPE OF WORK INVOLVED. CONTRACTOR IS TO INCLUDE IN HIS PROPOSAL ALL ITEMS, MATERIALS, ETC...TO ACHIEVE THE DESIGN CONCEPTS SHOWN ON THE DRAWINGS. MINOR CHANGES IN THE WORK, DUE TO EXISTING CONDITIONS, WILL BE ALLOWED IF APPROVED BY THE ARCHITECT/ENGINEER BEFORE PROCEEDING.

D. EXISTING DIMENSIONS SHOWN ARE APPROXIMATE; CONTRACTOR SHALL VERIFY ALL DIMENSIONS ON THE JOB. BOUNDARY SURVEY INFORMATION SHOWN IS FOR INFORMATION ONLY, REFER TO SURVEY(S) PROVIDED BY THE OWNER. SITE PLANS MAY NOT HAVE BEEN PREPARED WITH THE BENEFIT OF RECENT TOPOGRAPHIC SURVEY AND UTILITY SEARCH AND ENGINEER ASSUMES NO LIABILITY FOR INFO CONTAINED HEREIN OR UNFORESEEN CONDITIONS BELOW GROUND. CONTRACTOR IS ADVISED TO CONTACT UNDERGROUND UTILITY LOCATION SERVICES PRIOR TO ANY EXCAVATION ACTIVITIES.

E. CONTRACTOR IS TO INCLUDE IN HIS PROPOSAL ALL ADDITIONAL MATERIALS AND LABOR AS REQUIRED TO WORK AROUND EXISTING CONDITIONS, AND PAY FOR ALL PERMITS AND INSPECTIONS REQUIRED.

F. ALL WORKMANSHIP MUST BE IN THE BEST PRACTICE OF THE TRADE AS DETERMINED BY THE ARCHITECT/ENGINEER. ANY WORK NOT MEETING THESE STANDARDS WILL BE REJECTED.

G. CONTRACTOR IS TO DISPOSE OF ALL DEMOLITION MATERIALS AND LEAVE THE WORK IN A READY TO USE CONDITION. STATE AND FEDERAL DISPOSE REQUIREMENTS SHALL CONTROL THE DISPOSAL OF WASTE MATERIALS AND CONTAMINATED SOILS, IF ENCOUNTERED.

H. CONTRACTOR IS RESPONSIBLE FOR LOCATING AND PROTECTING ANY EXISTING UTILITIES ON OR ADJACENT TO PROPERTY.

I. THE CONTRACTOR MUST SUBMIT SHOP DRAWINGS AND/OR PRODUCT INFORMATION FOR ARCHITECT/ENGINEER REVIEW AND APPROVAL. MINOR ITEMS IN THE WORK ARE NOT SPECIFIED. CONTRACTOR IS TO USE QUALITY AND QUANTITY THAT IS STANDARD TO THE TRADE. FOR ALL PRODUCTS, WORK MUST COMPLY WITH THE MANUFACTURER'S STRICT RECOMMENDATIONS FOR INSTALLATION. IT IS THE CONTRACTOR'S RESPONSIBILITY TO OBTAIN INSTRUCTIONS AND TO THEN FOLLOW THEM.

J. CONSULT THE ARCHITECTURAL, STRUCTURAL, MECHANICAL, PLUMBING AND ELECTRICAL DRAWINGS FOR LOCATIONS AND DIMENSIONS OF OTHER BUILDING RELATED PROJECT REQUIREMENTS.

K. TYPICAL DETAILS APPLY TO ALL DRAWINGS AND SHALL BE USED EXCEPT WHERE OTHERWISE SHOWN OR NOTED.

DIVISION 1.4 - TESTING

A. PROVIDE TESTING IN ACCORDANCE WITH CHAPTER 17 OF THE BUILDING CODE OF NEW YORK STATE AS A QUALITY ASSURANCE PROGRAM INTENDED TO ENSURE THAT THE WORK IS PERFORMED IN ACCORDANCE WITH THE CONTRACT DOCUMENTS.

B. CONTRACTOR'S SHALL COOPERATE WITH LABORATORY PERSONNEL AND PROVIDE ACCESS TO THE WORK AS REQUIRED FOR THE PERFORMANCE OF THEIR SERVICES, SHALL RETAIN THE LATEST SET OF CONSTRUCTION DRAWINGS, FIELD SKETCHES, APPROVED SHOP DRAWINGS, AND SPECIFICATION AT THE PROJECT SITE FOR USE BY THE TESTING TECHNICIANS. CONTRACTOR'S SHALL ALSO PROVIDE CASUAL LABOR AND FACILITIES TO PROVIDE ACCESS TO THE WORK TO BE INSPECTED OR TESTED, TO OBTAIN AND HANDLE SAMPLES AT THE SITE, TO FACILITATE INSPECTIONS AND TESTS, TO CONSTRUCT A STORAGE BOX ON THE SITE OF SUFFICIENT SIZE TO STORE CYLINDERS, WHICH WILL AFFORD PROTECTION, REQUIRED BY ASTM C_31.

C. CONTRACTOR'S SHALL PROVIDE THE LABORATORY WITH PRELIMINARY REPRESENTATIVE SAMPLES OF MATERIALS TO BE TESTED, IN REQUESTED QUANTITIES. WHEN THE SOURCE, QUALITY OR CHARACTERISTIC OF AN APPROVED MATERIAL CHANGES OR INDICATES LACK OF COMPLIANCE WITH CONTRACT REQUIREMENTS, CONTRACTOR'S SHALL SUBMIT ADDITIONAL SAMPLES OF MATERIALS TO TESTING LABORATORY.

D. ADVANCED NOTIFICATION, SHALL BE 48 HOURS (MIN.) PRIOR TO COMMENCEMENT OF THE FOLLOWING:

1. SITE PREPARATION: EXCAVATION AND PROOF-ROLLING OF SUBGRADE
2. SOIL COMPACTION: DELIVERY OF FILL TO THE SITE, PLACEMENT AND COMPACTION OF FILL OR BACKFILL
3. CONCRETE: SETTING OF REINFORCING AND FORMWORK, PLACING CONCRETE

E. THE TESTING PROGRAM DOES NOT, IN ANY WAY, RELIEVE THE CONTRACTOR OF HIS OBLIGATION TO PERFORM WORK IN ACCORDANCE WITH THE REQUIREMENTS OF THE CONTRACT DOCUMENTS OR FROM IMPLEMENTING AN EFFECTIVE QUALITY CONTROL PROGRAM. ALL WORK THAT IS TO BE SUBJECTED TO INSPECTIONS SHALL FIRST BE REVIEWED BY THE CONTRACTOR'S QUALITY CONTROL PERSONNEL.

F. SERVICES OF TESTING LABORATORY RETAINED BY THE OWNER IS FOR VERIFICATION OF CONTRACTOR'S COMPLIANCE AND IF SUCH TESTS OF INSPECTION INDICATES FAILURE TO COMPLY WITH THE CONTRACT DOCUMENTS, THE CONTRACTOR SHALL BEAR ALL COST ASSOCIATED WITH ADDITIONAL TESTING AND INSPECTION, AFTER THE WORK HAS BEEN CORRECTED, TO VERIFY COMPLIANCE. AREAS WHERE SAMPLES ARE TAKEN FOR PURPOSES OF TESTING SHALL BE PATCHED TO THE SATISFACTION OF THE ARCHITECT/ENGINEER.

G. ANY DISCREPANCIES FROM THE CONTRACT DOCUMENTS FOUND DURING AN INSPECTION SHALL BE IMMEDIATELY REPORTED TO THE CONTRACTOR. IF THE DISCREPANCIES ARE NOT CORRECTED, THE INSPECTOR SHALL NOTIFY THE REGISTERED DESIGN PROFESSIONAL IN RESPONSIBLE CHARGE AND BUILDING OFFICIAL. REPORTS SHALL DOCUMENT ALL DISCREPANCIES IDENTIFIED AND THE CORRECTIVE ACTION TAKEN.

H. TESTING AND INSPECTIONS FOR EXISTING SUBGRADES SHALL INCLUDE LABORATORY TESTING AND FIELD VERIFICATION AS FOLLOWS:

1. LABORATORY TESTS

A. FOR EXISTING SITE MATERIAL
   1. COHESIVE SOILS AND SEMI_COHESIVE SOILS: PROVIDE ONE OPTIMUM MOISTURE_MAXIMUM DENSITY CURVE FOR EACH TYPE OF SUBGRADE SOIL ENCOUNTERED IN ACCORDANCE WITH ASTM D_1557.
   2. NON-COHESIVE SOILS: PROVIDE MAXIMUM AND MINIMUM INDEX DENSITIES AND RELATIVE DENSITIES FOR EACH TYPE OF SUBGRADE SOIL ENCOUNTERED IN ACCORDANCE WITH ASTM D_4254.

B. FOR BORROW MATERIALS: ANALYZE EACH TYPE OF BORROW MATERIALS BEFORE ACCEPTANCE AND DELIVERY TO THE SITE. ANY CHANGE IN THE SOURCE OR QUALITY OF THE MATERIAL WILL REQUIRE A NEW SERIES OF TESTS TO DETERMINE ACCEPTABILITY.
   1. PARTICLE SIZE ANALYSIS OF SOILS ASTM D_422, ASTM D_421, ASTM D_420, ASTM C_117 RECOMMENDED PRACTICE.
   2. PLASTICITY INDEX DETERMINATION ASTM D_4318.
   3. MOISTURE_DENSITY CURVE DETERMINATION ASTM D_1557 OR RELATIVE DENSITY (ASTM D_4253 OR ASTM D_4254) AS SPECIFIED ABOVE.
   4. FROST SUSCEPTIBILITY ANALYSIS.

   2. FIELD TESTS:

A. THE OWNER'S SOILS TESTING AGENCY REPRESENTATIVE SHALL BE PRESENT DURING DELIVERY AND COMPACTION OF FILL MATERIALS. OBSERVE PROOFROLLING OPERATIONS, IDENTIFY LOCATION AND EXTENT OF SOFT, LOOSE, OR YIELDED SUBGRADE MATERIAL THAT MUST BE REMOVED OR UNDERCUT, AND INSPECT UNDERCUT SUBGRADE.
B. ESTABLISH SUITABLE BEARING GRADES BELOW PAVEMENTS.
C. VERIFY NATURAL SOIL AND STRUCTURAL FILL SUBGRADES BELOW PAVEMENTS.
D. IN_PLACE DENSITY TESTS: TEST IN ACCORDANCE WITH ASTM D_1556 (SAND CONE METHOD) OR ASTM D_2922 (NUCLEAR METHOD) ON COMPACTED NATURAL SOILS OR STRUCTURAL FILL MATERIALS AS FOLLOWS:
   1. ONE TEST FOR EACH 2000 SQ. FT. OF PAVEMENT SUBGRADE PER 12" LIFT.
   2. ONE TEST FOR EACH 200 CU. YD. OF FILL AND BACKFILL AT EXTERIOR SIDE OF FOUNDATION WALLS AND UNPAVED AREAS.

I. CONCRETE SAMPLES SHALL BE TAKEN IN ACCORDANCE WITH ASTM C_172 "SAMPLING FRESH CONCRETE" AND COMPRESSION TESTS TO VERIFY THAT DESIGN MIX COMPLIES WITH CONTRACT DOCUMENTS SHALL BE COMPLETED. TEST SLUMP AND AIR CONTENT OF CONCRETE AT SAME FREQUENCY AND FROM SAME TRUCKLOAD AS COMPRESSION TESTS

J. INSPECT FORMWORK AND REINFORCING PRIOR TO PLACING OF CONCRETE.

K. INSPECT CONCRETE BATCHING, MIXING AND DELIVERY OPERATIONS FOR COMPLIANCES WITH THE SPECIFICATIONS.

DIVISION 2.1 - SITE CLEARING

A. CONDUCT SITE CLEARING OPERATIONS TO ENSURE MINIMUM INTERFERENCE WITH ROADS, STREETS, WALKS, AND OTHER ADJACENT OCCUPIED OR USED FACILITIES. DO NOT CLOSE OR OBSTRUCT STREETS, WALKS OR OTHER OCCUPIED OR USED FACILITIES WITHOUT PERMISSION FROM AUTHORITIES HAVING JURISDICTION.

B. PROVIDE PROTECTIONS NECESSARY TO PREVENT DAMAGE TO EXISTING IMPROVEMENTS INDICATED TO REMAIN IN PLACE.

C. PROTECT IMPROVEMENTS ON ADJOINING PROPERTIES AND ON OWNER'S PROPERTY.

D. PROTECT EXISTING TREES AND OTHER VEGETATION INDICATED TO REMAIN IN PLACE, AGAINST UNNECESSARY CUTTING, BREAKING OR SKINNING OF ROOTS, SKINNING OR BRUISING OF BARK, SMOTHERING OF TREES BY STOCKPILING CONSTRUCTION MATERIALS OR EXCAVATED MATERIALS WITHIN DRIP LINE, EXCESS FOOT OR VEHICULAR TRAFFIC, OR PARKING OF VEHICLES WITHIN DRIP LINE. PROVIDE TEMPORARY GUARDS TO PROTECT TREES AND VEGETATION TO BE LEFT STANDING.

E. WATER TREES AND OTHER VEGETATION TO REMAIN WITHIN LIMITS OF CONTRACT WORK AS REQUIRED TO MAINTAIN THEIR HEALTH DURING COURSE OF CONSTRUCTION OPERATIONS.

F. CAREFULLY REMOVE ITEMS INDICATED TO BE SALVAGED, AND STORE ON OWNER'S PREMISES WHERE INDICATED OR DIRECTED.

G. REMOVE TREES, SHRUBS, GRASS AND OTHER VEGETATION, IMPROVEMENTS, OR OBSTRUCTIONS AS REQUIRED TO PERMIT INSTALLATION OF NEW CONSTRUCTION. REMOVE SIMILAR ITEMS ELSEWHERE ON SITE OR PREMISES AS SPECIFICALLY INDICATED. "REMOVAL" INCLUDES DIGGING OUT AND OFF_SITE DISPOSING OF STUMPS AND ROOTS.

H. CUT MINOR ROOTS AND BRANCHES OF TREES INDICATED TO REMAIN IN A CLEAN AND CAREFUL MANNER, WHERE SUCH ROOTS AND BRANCHES OBSTRUCT INSTALLATION OF NEW CONSTRUCTION. PROVIDE PROTECTION FOR ROOTS OVER 1_1/2 INCH DIAMETER THAT ARE CUT DURING CONSTRUCTION OPERATIONS. COAT CUT FACES WITH AN EMULSIFIED ASPHALT, OR OTHER ACCEPTABLE COATING, FORMULATED FOR USE ON DAMAGED PLANT TISSUES. TEMPORARILY COVER EXPOSED ROOTS WITH WET BURLAP TO PREVENT ROOTS FROM DRYING OUT; COVER WITH EARTH AS SOON AS POSSIBLE.

I. STRIP TOPSOIL (REFERENCE DIVISION 2.2) TO WHATEVER DEPTHS ENCOUNTERED IN A MANNER TO PREVENT INTERMINGLING WITH UNDERLYING SUBSOIL OR OTHER OBJECTIONABLE MATERIAL. REMOVE HEAVY GROWTHS OF GRASS FROM AREAS BEFORE STRIPPING. WHERE EXISTING TREES ARE INDICATED TO REMAIN, LEAVE EXISTING TOPSOIL IN PLACE WITHIN DRIP LINES TO PREVENT DAMAGE TO ROOT SYSTEM. STOCKPILE TOPSOIL IN STORAGE PILES IN AREAS INDICATED OR DIRECTED. CONSTRUCT STORAGE PILES TO PROVIDE FREE DRAINAGE OF SURFACE WATER. COVER STORAGE PILES, IF REQUIRED, TO PREVENT WIND EROSION.

J. CLEAR SITE OF TREES, SHRUBS AND OTHER VEGETATION, EXCEPT FOR THOSE INDICATED TO BE LEFT STANDING. COMPLETELY REMOVE STUMPS, ROOTS, AND OTHER DEBRIS PROTRUDING THROUGH GROUND SURFACE. USE ONLY HAND METHODS FOR GRUBBING INSIDE TREE PROTECTION ZONES AND AREAS BETWEEN SUCH POINTS AND EXISTING FINISHED GRADES. ABRUPT CHANGES IN SLOPES SHALL BE ROUNDED. ALL NEW GRADES, OTHER THAN GRADES FOR PAVED AREAS, TO BE WITHIN PLUS OR MINUS 0.50" OF GRADES INDICATED ON DRAWINGS OR IN SPECIFICATIONS. GRADE FOR PAVED AREAS, BOTH SUBGRADE AND BASE COURSES, TO BE PLUS OR MINUS 0.25" OF INDICATED GRADES.

K. REMOVE EXISTING ABOVE_GRADE AND BELOW_GRADE IMPROVEMENTS AS INDICATED AND AS NECESSARY TO FACILITATE NEW CONSTRUCTION. ABANDONMENT OR REMOVAL OF CERTAIN UNDERGROUND PIPE OR CONDUITS MAY BE INDICATED ON MECHANICAL OR ELECTRICAL DRAWINGS, AND INCLUDED UNDER WORK OF RELATED DIVISION 15 AND 16 SECTIONS. REMOVAL OF ABANDONED UNDERGROUND PIPING OR CONDUIT INTERFERING WITH CONSTRUCTION IS INCLUDED UNDER THIS SECTION.

L. REMOVE WASTE MATERIALS AND UNSUITABLE OR EXCESS TOPSOIL FROM OWNER'S PROPERTY.

DIVISION 2.2 - EARTHMOVING

A. SLOPED SIDES OF EXCAVATIONS ARE TO COMPLY WITH THE LOCAL CODES, ORDINANCES AND REQUIREMENTS OF AGENCIES HAVING JURISDICTION. SHORE AND/OR BRACE WHERE SLOPING IS NOT POSSIBLE BECAUSE OF SPACE RESTRICTIONS OR STABILITY OF MATERIAL EXCAVATED. MAINTAIN SIDES AND SLOPES OF EXCAVATIONS IN SAFE CONDITION UNTIL COMPLETION OF BACKFILLING.

B. PROVIDE MATERIALS FOR SHORING AND BRACING, SUCH AS SHEET PILING, UP-RIGHTS, STRINGERS, AND CROSS BRACES, AS REQUIRED. MAINTAIN SHORING AND BRACING IN EXCAVATIONS REGARDLESS OF TIME PERIOD EXCAVATIONS WILL REMAIN OPEN. EXTEND SHORING AND BRACING AS EXCAVATION PROGRESSES.

C. BARRICADE OPEN EXCAVATIONS OCCURRING AS PART OF THIS WORK AND POST WITH WARNING LIGHTS. OPERATE WARNING LIGHTS DURING HOURS FROM DUSK TO DAWN EACH DAY AND AS OTHERWISE REQUIRED.

D. PREVENT SURFACE WATER AND SUBSURFACE GROUND WATER FROM FLOWING INTO EXCAVATIONS AND FROM FLOODING PROJECT SITE AND SURROUNDING AREA. NO MATERIALS SHALL BE PLACED IN WATER OR ON FROZEN GROUND.

E. MATERIALS:

1. GENERAL FILL: SAND, GRAVEL, FRIABLE EARTH OR CLAYS OF LOW PLASTICITY, FREE OF ORGANIC MATERIALS, FROZEN MATERIAL, TRASH, MASONRY, RUBBLE, CONCRETE, DEBRIS AND FREE OF STONES HAVING A DIMENSION OF 4-INCHES OR GREATER
2. CONCRETE SAND: NYSDOT ITEM 703-07
3. GROUT SAND: NYSDOT 703-04
4. GRAVEL: NYSDOT ITEM 703-02, TYPE 1
5. SRUCTURAL FILL: NYSDOT ITEM 304-2.02, TYPE 2 OR TYPE 4
6. CRUSHED STONE: NYSDOT 703-02, BLEND OF TYPE 1 AND TYPE 2, WITH 100% PASSING 1.5", 90-100% PASSING 1", 25-60% PASSING ½", 0-10% PASSING #4, AND 0-5% PASSING #8.
7. WOVEN GEOTEXTILE FABRIC: MIRAFI 500X
8. NON-WOVEN GEOTEXTILE FABRIC: MIRAFI 140N
9. TOPSOIL: NATURAL, FERTILE, FRIABLE GRANULAR SOIL CHARACTERISTIC OF PRODUCTIVE SOILS IN THE VICINITY, UNIFORM IN COMPOSITION AND TEXTURE, FREE FROM SUBSOIL, CLAY LUMPS, STONES, ORGANIC MATERIAL, TOXIC OR HAZARDOUS SUBSTANCES, AND ANY MATERIAL TWO INCHES OR MORE IN GREATEST DIMENSION
10. SLAG NOT PERMITTED

F. REMOVE EXISTING SURFACE SOIL MATERIAL, INCLUDING VEGETATION, TOPSOIL AND LOOSE BOULDERS TO A MINIMUM DEPTH OF 12 INCHES BELOW EXISTING SURFACE GRADE OR AS REQUIRED TO COMPLY WITH CROSS-SECTIONS, ELEVATIONS, AND GRADES AS INDICATED. THE EXPOSED SURFACE SOIL MUST BE PROOFROLLED, WITH A MINIMUM 10-TON STATIC ROLLER, IN THE PRESENCE OF THE SOILS TESTING AGENCY. WHERE UNCONTROLLED FILL, SOFT, LOOSE OR YIELDED MATERIAL EXISTS, THESE AREAS MUST BE UNDERCUT A MINIMUM OF 2'-0". TESTING AND INSPECTION OF THE UNDERCUT SUBGRADE, BY THE SOILS TESTING AGENCY, MAY REQUIRE FURTHER UNDERCUTTING ON SOME AREAS, DEPENDING ON THE TYPE AND NATURE OF FILL/UNSUITABLE MATERIAL EXPOSED.

G. EXCAVATE TRENCHES TO THE UNIFORM WIDTH REQUIRED FOR PARTICULAR ITEM TO BE INSTALLED AND SUFFICIENTLY WIDE TO PROVIDE AMPLE WORKING ROOM. PROVIDE 1'-0" MINIMUM CLEARANCE ON BOTH SIDES OF PIPE OR CONDUIT, BUT NOT LESS THAN 3'-0" TOTAL TRENCH WIDTH. EXCAVATE TRENCHES TO DEPTH INDICATED OR REQUIRED. CARRY DEPTH OF TRENCHES FOR PIPING TO ESTABLISH INDICATED FLOW LINES AND INVERT ELEVATIONS. GRADE BOTTOMS OF TRENCHES AS INDICATED, NOTCHING TO PROVIDE SOLID BEARING FOR ENTIRE BODY OF PIPE. REMOVE UNSTABLE, SOFT AND UNSUITABLE MATERIALS AT THE SURFACE UPON WHICH PIPES ARE TO BE LAID AND BACKFILL WITH CLEAN SAND OR PEA GRAVEL TO INDICATED LEVEL. FILL UNEVENNESS WITH TAMPED SAND BACKFILL. DIG BELL HOLES AT EACH PIPE JOINT TO RELIEVE THE BELLS OF ALL LOADS AND TO ENSURE CONTINUOUS BEARING OF THE PIPE BARREL ON THE FOUNDATION. DO NOT BACKFILL TRENCHES UNTIL TESTS AND INSPECTIONS HAVE BEEN MADE AND BACKFILLING AUTHORIZED BY THE ARCHITECT/ENGINEER. USE CARE IN BACKFILLING TO AVOID DAMAGE OR DISPLACEMENT OF PIPE SYSTEMS.

H. CONTRACTORS WILL TAKE EVERY PRECAUTION DURING FINAL STAGES OF EXCAVATION TO PREVENT DISTURBANCE OF THE NATURAL SOIL AT PROPOSED SUBGRADE ELEVATIONS. SUCH PRECAUTIONS SHALL INCLUDE, BUT NOT BE LIMITED TO, KEEPING EQUIPMENT OFF FINAL SUBGRADE DURING THE LAST SEVERAL FEET OF EXCAVATION, USING EXCAVATING BUCKETS WITHOUT TEETH, PLACING CONCRETE MUD MATS BELOW FOUNDATIONS AND DEWATERING EXCAVATIONS.

I. SET GRADE STAKES WHERE SPOT ELEVATIONS ARE SHOWN, AT BREAKS IN GRADE, ALONG DRAINAGE "SWALES" AND AS OTHERWISE REQUIRED TO CORRECTLY GRADE THE AREA ACCORDING TO ELEVATIONS SHOWN ON PLANS. MAXIMUM SPACING OF STAKES TO BE 50 FEET ON CENTER. GRADE NOT OTHERWISE INDICATED SHALL BE UNIFORM LEVELS OR SLOPES BETWEEN POINTS WHERE ELEVATIONS ARE GIVEN OR BETWEEN SUCH POINTS AND EXISTING FINISHED GRADES. ABRUPT CHANGES IN SLOPES SHALL BE ROUNDED. ALL NEW GRADES, OTHER THAN GRADES FOR PAVED AREAS, TO BE WITHIN PLUS OR MINUS 0.50" OF GRADES INDICATED ON DRAWINGS OR IN SPECIFICATIONS. GRADE FOR PAVED AREAS, BOTH SUBGRADE AND BASE COURSES, TO BE PLUS OR MINUS 0.25" OF INDICATED GRADES.

J. COMPACTION OF FILL: UNIFORMLY SPREAD EACH LAYER, MOISTEN OR DRY AS REQUIRED FOR OPTIMUM MOISTURE CONTENT, AND THEN COMPACT SO DENSITY OF THE COMPACTED MATERIAL MEETS OR EXCEEDS 95% MAXIMUM DRY DENSITY EXCEPT IN NON-LOADED GRASSED AREAS WHICH NEED NOT EXCEED 90%.

K. REPAIR TO PROPER GRADE ANY SETTLEMENT OF SLAB, PAVEMENT, UTILITY, STRUCTURE, OR LAWN, ADVERSELY AFFECTED BY SETTLEMENT, WITHIN ONE YEAR AFTER FINAL ACCEPTANCE AT NO EXPENSE TO THE OWNER.

DIVISION 2.3 - TEMPORARY EROSION AND SEDIMENT CONTROL

A. FURNISH, INSTALL, INSPECT, MAINTAIN, AND REMOVE SOIL EROSION AND SEDIMENT CONTROL MEASURES AS SHOWN ON THE CONTRACT DOCUMENTS OR AS ORDERED BY THE ENGINEER DURING THE LIFE OF THE CONTRACT. COORDINATE WITH THE SOIL EROSION AND SEDIMENT CONTROL FEATURES SPECIFIED ELSEWHERE IN THE CONTRACT DOCUMENTS TO THE EXTENT PRACTICAL TO ASSURE EFFECTIVE AND CONTINUOUS SOIL EROSION AND SEDIMENT CONTROL THROUGHOUT THE CONSTRUCTION AND POST CONSTRUCTION PERIOD IN ACCRODANCE WITH REFERENCE STANDARDS NOTED IN DIVISION 1 AND "NEW YORK STANDARDS AND SPECIFICATIONS FOR EROSION AND SEDIMENT CONTROL", SOIL AND WATER CONSERVATION SOCIETY, EMPIRE STATE CHAPTER. IN THE EVENT OF CONFLICT BETWEEN THESE SPECIFICATION REQUIREMENTS AND POLLUTION CONTROL LAWS, RULES, REGULATIONS OR PERMIT CONDITIONS BY OTHER FEDERAL OR STATE OR LOCAL GOVERNMENT AGENCIES, THE MORE RESTRICTIVE LAWS, RULES OR REGULATIONS SHALL APPLY.

B. MATERIALS:

1. STONE FILLING: STONE FILLING SHALL MEET THE REQUIREMENTS OF NYSDOTSS SECTION 620-2.02 STONE FILLING, LIGHT.
2. GEOTEXTILE: GEOTEXTILES SHALL MEET THE REQUIREMENTS OF NYSDOTSS SECTION 207-2 MATERIALS. UV SENSITIVE GEOTEXTILES SHALL BE PROTECTED FROM EXPOSURE TO SUNLIGHT DURING TRANSPORT AND STORAGE.

C. PERIMETER SEDIMENT CONTROLS SHALL BE INSTALLED PRIOR TO PERFORMING GRUBBING, EXCAVATION, AND BORROW OR FILL OPERATIONS.

D. TEMPORARY SILT FENCE

1. SILT FENCE SHALL BE LISTED IN THE NYSDOT APPROVED LIST. A SILT FENCE ASSEMBLY SHALL CONSIST OF SILT FENCE GEOTEXTILE, POSTS, AND FASTENERS AND MAY INCLUDE MESH SUPPORT CONSISTENT WITH THE APPROVED LIST.

A. POSTS SHALL BE DRIVEN INTO THE GROUND. POSTS SHALL BE EITHER WOOD, METAL, OR SYNTHETIC. SOFTWOOD POST SHALL BE 38 MM X 89 MM, HARDWOOD POST SHALL BE AT LEAST 32 MM X 32 MM, STEEL POST SHALL BE "I" OR "L" SHAPED IN CROSS SECTION, WITH A MINIMUM WEIGHT OF 2 KG/M. POSTS SHALL BE A MINIMUM OF 1.2 M LONG AND SHALL BE SPACED CONSISTENT WITH THE MATERIAL SELECTED AND AS INDICATED IN THE NYSDOT APPROVED LIST.
B. GEOTEXTILE AND ANY MESH SUPPORT (IF APPLICABLE) SHALL BE PLACED ON THE UPSTREAM SIDE OF THE POSTS. FOR THOSE SILT FENCE ASSEMBLIES ON THE NYSDOT APPROVED LIST THAT REQUIRE A MESH SUPPORT, THE SUPPORT SHALL CONSIST OF 14 GAUGE (MIN) WELDED WIRE MESH WITH A MAXIMUM 150 MM X 150 MM OPENING OR POLYMERIC MESH. ALL MESH SUPPORT SHALL BE A MINIMUM OF 750 MM IN HEIGHT.
C. THE GEOTEXTILE SHALL BE FASTENED TO EACH POST IN NO LESS THAN 4 LOCATIONS WITH APPROVED FASTENERS. THE MESH SUPPORT SHALL BE FASTENED TO EACH POST AT THE TOP, BOTTOM, AND TWO ADDITIONAL EVENLY SPACED LOCATIONS, OR BY A CONTINUOUS CORDED ATTACHMENT ALONG THE TOP OF THE ASSEMBLY. FASTENERS SHALL BE HEAVY-DUTY STAPLES, HOG RINGS, TIE WIRES, OR ANY OTHER FASTENER COMPATIBLE WITH THE POST MATERIAL.
D. GEOTEXTILE AT THE BOTTOM OF THE FENCE SHALL BE BURIED IN A TRENCH TO A DEPTH OF 150 MM. THE TRENCH SHALL BE BACK FILLED WITH THE EXCAVATED SOIL AND THE SOIL COMPACTED BY TAMPING.
E. ANY GEOTEXTILE OR MESH SPLICES NECESSARY FOR FENCE ERECTION SHALL BE CONTINUOUS BETWEEN TWO POST SECTIONS.

E. DRAINAGE STRUCTURE INLET PROTECTION

1. DRAINAGE STRUCTURE INLET PROTECTION SHALL BE PLACED WHERE SHOWN IN THE CONTRACT DOCUMENTS AND CONSTRUCTED IN ACCORDANCE WITH THE STANDARD DETAIL SHEETS.

F. CONSTRUCTION ENTRANCES

1. CONSTRUCTION ENTRANCES SHALL BE PLACED WHERE SHOWN IN THE CONTRACT DOCUMENTS AND CONSTRUCTED IN ACCORDANCE WITH THE STANDARD SHEETS. CONSTRUCTION ENTRANCES SHALL CONSIST OF A GEOTEXTILE, CRUSHED STONE OR GRAVEL AND, IF NECESSARY, A DRAINAGE PIPE TO MAINTAIN DITCH FLOW.

A. GEOTEXTILE SHALL MEET THE REQUIREMENTS OF NYSDOTSS SECTION 207-2 MATERIALS, GEOTEXTILE STABILIZATION, STRENGTH CLASS 1.
B. CRUSHED STONE OR GRAVEL SHALL BE 150 MM OF COARSE AGGREGATE MATERIAL MEETING THE GRADATION REQUIREMENTS OF SIZE DESIGNATION #3 ON NYSDOTSS TABLE 703-4.

C. THE CONTRACTOR SHALL PROVIDE A DRAINAGE PIPE SIZED WITH SUFFICIENT CAPACITY TO CARRY DITCH FLOW. THE PIPE DIMENSION SHALL BE CONSISTENT WITH THE MODIFIED SOIL EROSION AND SEDIMENT CONTROL PLAN APPROVED BY THE ENGINEER. THE DRAINAGE PIPE MAY CONSIST OF NEW OR USED MATERIAL IN SATISFACTORY CONDITION AND SUITABLE FOR THE INTENDED USE. THE ENGINEER WILL REJECT ANY MATERIALS DETERMINED TO BE UNSATISFACTORY.
   2. THE CONTRACTOR SHALL GRADE, INCLUDING EXCAVATING OR PLACING FILL, TO PREPARE THE ORIGINAL GROUND SURFACE FOR THE PLACEMENT OF A STABILIZED PAD OF 150 MM OR COARSE AGGREGATE MATERIAL, UNDERLAIN BY A GEOTEXTILE. IF NECESSARY, A DRAINAGE PIPE SHALL BE INSTALLED TO MAINTAIN THE CAPACITY OF THE DITCH. THE PIPE DIMENSION SHALL BE CONSISTENT WITH THE MODIFIED SOIL EROSION AND SEDIMENT CONTROL PLAN APPROVED BY THE ENGINEER. ALL AREAS CUT OR FILLED AND NOT STABILIZED BY THE SEDIMENT CONTROL PLAN APPROVED BY THE ENGINEER. ALL AREAS CUT OR FILLED AND NOT STABILIZED BY THE CONSTRUCTION ENTRANCE MATERIAL SHALL BE COVERED WITH AN EROSION CONTROL TREATMENT (TEMPORARY MULCH, TEMPORARY SEED AND MULCH, ETC.) AND SHALL BE INCLUDED IN THIS PAY ITEM.
   3. WHEN WASHING IS PERFORMED, THE WASHING AREA WITHIN THE CONSTRUCTION ENTRANCE SHALL BE LOCATED IN AN AREA, WHICH WILL DRAIN INTO AN APPROVED SEDIMENT CONTROL MEASURE(S).
   4. THE CONSTRUCTION ENTRANCE SHALL BE MAINTAINED IN A CONDITION, WHICH WILL PREVENT TRACKING OR FLOWING OF SEDIMENT ONTO THE RIGHT-OF-WAY. ALL SEDIMENT SPILLED, DROPPED, WASHED OR TRACKED ONTO THE RIGHT-OF-WAY SHALL BE REMOVED IMMEDIATELY. IN THEE VENT THE ENTRANCE IS NO LONGER PERFORMING PROPERLY (I.E. THE ENTRANCE AGGREGATE BECOMES CLOGGED WITH SEDIMENT), THE CONTRACTOR SHALL TOP-DRESS THE ENTRANCE WITH ADDITIONAL COARSE AGGREGATE MATERIAL.

DIVISION 2.4 - PAVING

A. FINE GRADE AND PROOF ROLL SUBGRADE UNDER PAVEMENT IN ALL AREAS IN ACCORDANCE WITH NYSDOT SPECIFICATIONS 203-3.14.

B. BITUMINOUS PAVING MATERIALS

1. SUB-BASE COURSE - STRUCTURAL FILL PER DIVISION 2.2
2. ASPHALT BINDER: SEE DETAIL
3. ASPHALT TOPPING: SEE DETAIL
4. TACK COAT: SEE DETAIL
5. BITUMINOUS PAVEMENT SEALER: A COAL TAR EMULSION MATERIAL SPECIFICALLY FORMULATED TO SEAL ASPHALT CONCRETE PAVEMENT. ADD FOUR POUNDS OF GROUT SAND PER GALLON OF UNDILUTED PAVEMENT SEALER AND MIX TO A UNIFORM CONSISTENCY. DILUTE SEALER WITH POTABLE WATER IN ACCORDANCE WITH THE MANUFACTURER'S RECOMMENDATIONS.

C. BITUMINOUS PAVING PLACEMENT

1. ALL COURSES: ROLL EACH COURSE WITH 10 TON ROLLER OR EQUIVALENT. COMMENCE ROLLING ALONG LOWER EDGE AND CONTINUE UNTIL EDGE IS THOROUGHLY COMPACTED, AFTER WHICH GRADUALLY ADVANCE TO THE CROWN. CONTINUE ROLLING UNTIL THE LAYER HAS BECOME THOROUGHLY COMPACTED AND IS TRUE TO GRADE AND CROSS SECTION.
2. SUB-BASE COURSE: PLACE ON DRY SUBGRADE IN MAXIMUM LIFTS OF 6" WITH A MINIMUM COMPACTION OF 95% OF MAXIMUM DRY DENSITY. REMOVE SUBGRADE MATERIAL, WHICH BECOMES MIXED WITH BASE COURSE AND RECONSTRUCT. GRADE TOLERANCE: PLUS OR MINUS 3/8" FROM INDICATED GRADES.
3. ASPHALT TOP COURSE: DO NOT INSTALL ASPHALT PAVING OVER WET BASE COURSE OR IF AMBIENT TEMPERATURE IS BELOW 50 DEGREES F. PLACE IN TWO COURSES TO COMPACTED THICKNESS AS DETAILED. WHERE PAVEMENT ABUTS CURBS

FOOTING SCHEDULE

MARK	SIZE			REINFORCING – BOTTOM EACH WAY (UON)	REMARKS
	W	L	t		
F1	3'–0"	3'–0"	1'–0"	#6 at 12" O.C.	--

FOUNDATION/FLOOR PLAN

1/4" = 1'–0"

1. TOP OF FINISHED FLOOR SLAB EL. 576.50' UON [+ OR –] FROM EL. 576.50'
2. BOTTOM OF FOOTING EL. 572.00' (–4'–6") UNLESS NOTED THUS:
3. BOTTOM OF GRADE BEAM EL. 571.50' (–5'–0")
4. SJ AND FJ INDICATE SLAB CONTROL JOINTS AS PER TYPICAL DETAILS
5. HD# INDICATES LOCATION OF SIMPSON HOLDOWN PER SCHEDULE AND TYPICAL DETAIL
6. WS INDICATES STEP IN TOP OF CONCRETE FOUNDATION TOP OF CONCRETE FOUNDATION EL. 576.50' UON THUS:
7. LS INDICATES STEPPED BRICK LEDGE IN FOUNDATION TOP OF LEDGE ELEVATION NOTED THUS:
8. FS INDICATES STEPPED WALL FOOTING AS PER TYPICAL DETAIL
9. U INDICATES APPROXIMATE LOCATIONS OF UTILITY CROSSINGS. COORDINATE WITH CIVIL AND MEP DWGS: REFERENCE TYPICAL DETAIL ON DRAWING S–202

HOLDOWN SCHEDULE

LABEL	PRODUCT	POST SIZE	ANCHOR ROD
HD1	DTT2Z	(4) 2x6	PAB4x54
HD2	HDUE5–SDS3	(4) 2x8	PAB4x54

NOTES: 1. ALL HOLDOWNS TO BE SUPPLIED IN PAIRS
2. LOCATE HOLDOWNS WHERE SHOWN ON PLAN AS CLOSE TO CORNERS OR ROUGH OPENINGS ABOVE AS POSSIBLE

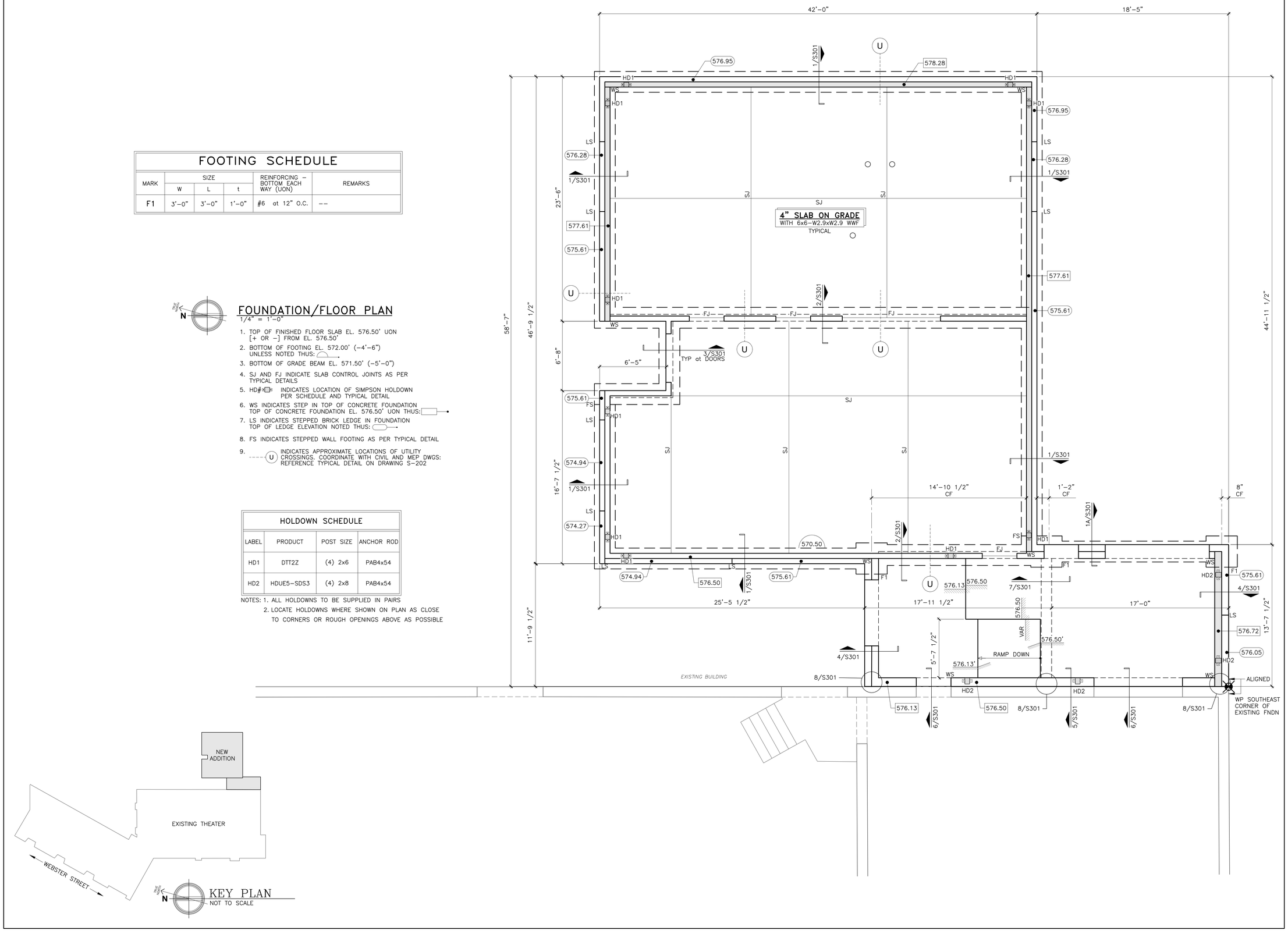

CJS ARCHITECTS
BUFFALO | ROCHESTER
www.cjsarchitects.com

ARCHITECT
CJS ARCHITECTS
755 SENECA STREET, BUFFALO, NY 14210
(716)716.856.6448)

CIVIL.STRUCTURAL ENGINEER
TREDO ENGINEERS
755 SENECA STREET
BUFFALO, NY 14210
(716)716.876.7147)

MEP.FP ENGINEER
BUFFALO ENGINEERING, P.C.
4245UNION ROAD, SUITE 204 BUFFALO, NY 14425
(716.633.5300)

COPYRIGHT©2026 TREDO ENGINEERS
ALL RIGHTS RESERVED. NO PART OF THIS DRAWING MAY BE REPRODUCED OR COPIED IN ANY FORM BY ANY MEANS WITHOUT THE WRITTEN PERMISSION OF THE ENGINEERS.

REPRODUCTION OF THIS DRAWING FOR CONSTRUCTION PURPOSES ON OF SHOP AND/OR FIELD DETAIL DRAWINGS IS EXPRESSLY FORBIDDEN.

UNAUTHORIZED ALTERATION AND/OR DUPLICATION OF THIS DRAWING IS A VIOLATION OF SECTION 7209, PROVISION 2, OF THE NEW YORK STATE EDUCATION LAW.

100% CD

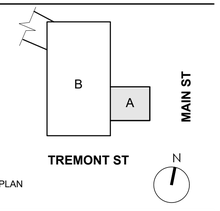

KEY PLAN

RIVIERA THEATRE

RIVIERA THEATRE GREEN ROOM

67 WEBSTER ST.
NORTH TONAWANDA, NY
14120

REV. #	DESCRIPTION	DATE

JOB NO.	2234 (T.E. JOB #25-92)
SCALE	AS NOTED
ISSUE DATE	10.21.2026
DRAWN BY	CAS
CHECKED BY	MJE

THIS IS A SINGLE SHEET OF A COHESIVE SET OF CONSTRUCTION DOCUMENTS (INCLUDING DRAWINGS AND SPECIFICATIONS). INTERPRETATION OF THE INFORMATION AS PRESENTED SHOULD BE BASED ON THE ENTIRE SET OF DOCUMENTS.

DRAWING TITLE

FOUNDATION / FLOOR PLAN

S-101

CONSTRUCTION DOCUMENTS

ROOF FRAMING PLAN

1/4" = 1'-0"

1. ROOF TRUSS BEARING EL. 588' UON ON PLAN (+11'-6" ABOVE FINISHED FLOOR)
2. ROOF SHEATHING TO BE 5/8" APA RATED EXP. 1 PLYWOOD (TYPICAL)
3. d t s — INDICATES FLOOR FRAMING THUS:
   - SPACING (IN INCHES)
   - TYPE OF FRAMING:
     - J = DFL#2 2x LUMBER
     - L = 1.9E LVL (1 3/4"w)
     - W = OPEN WEB TRUSS
     - T = TJI
   - DEPTH (IN INCHES)
4. —⊙ INDICATES WALL TYPE PER SCHEDULE
5. H* INDICATES LOAD BEARING WOOD HEADER REQUIRED PER SCHEDULE: REF. TYPICAL DETAILS
6. RTU INDICATES APPROXIMATE LOCATION OF RTU AND CURB: COORDINATE SIZE AND WEIGHT WITH MEP DRAWINGS AND PROVIDE SUB-FRAMING PER TYPICAL DETAILS
7. ORD INDICATES APPROXIMATE LOCATION OF ROOF DRAIN: COORDINATE WITH ARCHITECT AND MEP DRAWINGS
8. COORDINATE EXACT SIZE AND LOCATION OF ALL ROOF OPENINGS w/ ARCH AND MECH DWGS. PRIOR TO PREPARING SHOP DWGS

FLOOR TRUSS DESIGN LOADS:

TOP CHORD DL 15 PSF
SL 45 PSF
(REFERENCE SUPERIMPOSED DRIFT SURCHARGE LOAD DIAGRAM ON DRAWING S201)

BOTTOM CHORD DL 10 PSF

STRUCTURAL WALL TYPE SCHEDULE	
MARK	DESCRIPTION
1	2x6 SPF STUD at 16" O.C.
2	(2) 2x6 SPF STUD at 16" O.C.
3	(2) 2x8 SPF STUD at 16" O.C.
SHEAR WALL SHEATHING SCHEDULE	
A	ADD 7/16 APA RATED EXP. 1 SHEATHING 8d COMMON at 6"

NOTES:

1. ALL DBL TOP AND SILL PLATES TO MATCH STUD FRAMING
2. AT FOUNDATION, SILL PLATE ANCHORAGE SHALL BE 5/8"øGr 36 HOOKED ANCHORS WITH 7" MIN EMBEDMENT at 48" O.C. UNLESS OTHERWISE REQUIRED FOR SHEAR WALLS PER TYPICAL DETAILS.
   LOWEST ON-CENTER SPACING SHALL GOVERN.
4. PROVIDE PT 2x MATERIAL FOR ALL SILL PLATES IN CONTACT WITH FOUNDATIONS
5. TAG POINTS TO SIDE OF WALL WITH SHEATHING (UON)

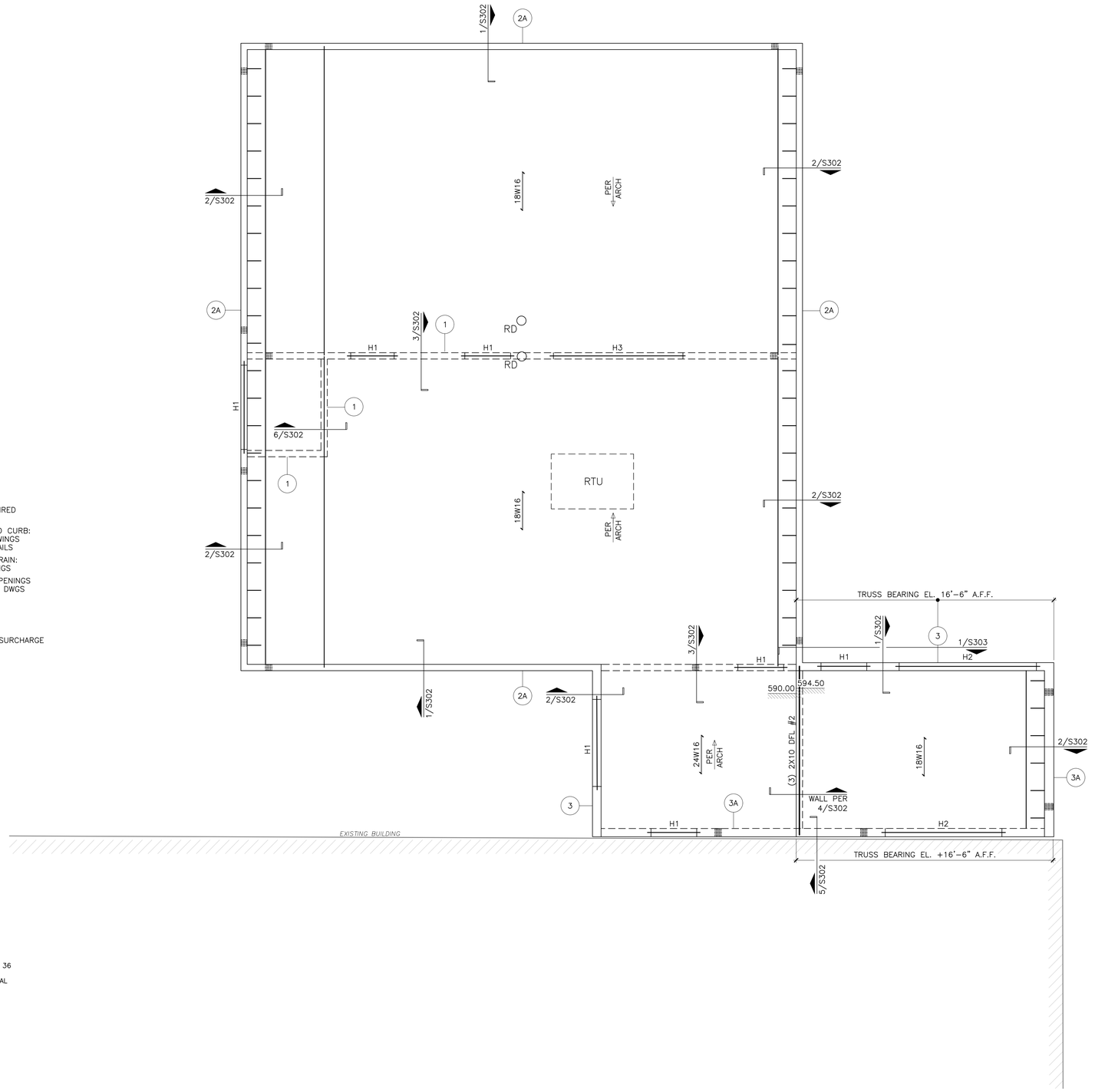

CJS ARCHITECTS
BUFFALO | ROCHESTER
www.cjsarchitects.com

ARCHITECT
CJS ARCHITECTS
755 SENECA STREET, BUFFALO, NY 14210
(716)716.856.6448)

CIVIL,STRUCTURAL ENGINEER
TREDO ENGINEERS
755 SENECA STREET
BUFFALO, NY 14210
(716)716.876.7147)

MEP,FP ENGINEER
BUFFALO ENGINEERING, P.C.
4245UNION ROAD, SUITE 204 BUFFALO, NY 14425
(716.633.5300)

COPYRIGHT©2026 TREDO ENGINEERS
ALL RIGHTS RESERVED. NO PART OF THIS DRAWING MAY BE REPRODUCED OR COPIED IN ANY FORM BY ANY MEANS WITHOUT THE WRITTEN PERMISSION OF THE ENGINEERS.

REPRODUCTION OF THIS DRAWING FOR CONSTRUCTION PURPOSES ON OF SHOP AND/OR FIELD DETAIL DRAWINGS IS EXPRESSLY FORBIDDEN.

UNAUTHORIZED ALTERATION AND/OR DUPLICATION OF THIS DRAWING IS A VIOLATION OF SECTION 7209, PROVISION 2, OF THE NEW YORK STATE EDUCATION LAW.

100% CD

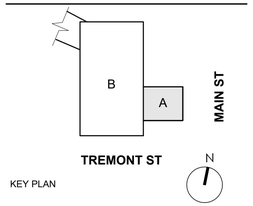

KEY PLAN

RIVIERA THEATRE

RIVIERA THEATRE GREEN ROOM

67 WEBSTER ST.
NORTH TONAWANDA, NY
14120

REV. #	DESCRIPTION	DATE

JOB NO.	2234 (T.E. JOB #25-92)
SCALE	AS NOTED
ISSUE DATE	10.21.2026
DRAWN BY	CAS
CHECKED BY	MJE

THIS IS A SINGLE SHEET OF A COHESIVE SET OF CONSTRUCTION DOCUMENTS (INCLUDING DRAWINGS AND SPECIFICATIONS). INTERPRETATION OF THE INFORMATION AS PRESENTED SHOULD BE BASED ON THE ENTIRE SET OF DOCUMENTS.

DRAWING TITLE

ROOF FRAMING PLAN

S-102

CONSTRUCTION DOCUMENTS

FOUNDATIONS

F1 IN GENERAL, EXTERIOR CONSTRUCTION SHALL BE CARRIED DOWN NOT LESS THAN FOUR FEET BELOW FINISHED EXTERIOR GRADE.

F2 ALL SOIL SUPPORTED FOOTINGS SHALL BEAR ON STABLE, NATURAL, DENSE OR BETTER SILTY SAND (SM) OR ON AN APPROVED SELECT GRANULAR FILL SECTION WHICH IS PLACED IN LOOSE LIFTS NO GREATER THAN 12 INCHES THICK AND COMPACTED TO 95% MAX. DRY DENSITY AS PER ASTM D1557; YIELDING A NET ALLOWABLE BEARING CAPACITY OF 3.0 KIPS PER SQUARE FOOT (1 KIP=1000 LBS.), PER THE RECOMMENDATIONS OF THE GEOTECHNICAL INVESTIGATION AND REPORT PREPARED BY BARRON AND ASSOCIATES, PC DATED JAN 13, 2023

F3 NO FOOTINGS OR SLABS SHALL BE PLACED IN WATER OR ON FROZEN GROUND.

F4 ALL FOOTING EXCAVATIONS ARE TO BE FINISHED BY HAND. COMPACT FOOTING SUBGRADES TO A MINIMUM OF 95% MODIFIED PROCTOR DENSITY AT OPTIMUM MOISTURE CONTENT. PLACE FOOTING CONCRETE SAME DAY OF EXCAVATION OR PROTECT SUBGRADE BY IMMEDIATELY PLACING A 3-INCH LEAN CONCRETE MUD MAT.

F5 ALL FINISHED EXCAVATIONS AND BEARING GRADES SHALL BE INSPECTED AND APPROVED BY THE OWNER'S SOIL TESTING AGENCY BEFORE ANY CONCRETE IS PLACED.

F6 ALL STRUCTURAL FILL UNDER ANY PORTION OF THE BUILDING SHALL BE COMPACTED IN 8-INCH LIFTS. SEE SPECIFICATIONS FOR THE ACCEPTABLE GRADATIONS AND COMPACTION REQUIREMENTS.

F7 THE ARCHITECT/ENGINEER ASSUMES NO RESPONSIBILITY FOR THE VALIDITY OF THE SUBSURFACE CONDITIONS DESCRIBED ON THE DRAWINGS, TEST BORINGS OR TEST PITS. THESE DATA REPRESENT CONDITIONS ONLY AT THESE SPECIFIC LOCATIONS AT THE PARTICULAR TIME THEY WERE MADE.

F8 BACKFILL AGAINST FOUNDATION WALLS BELOW GRADE SO THAT THE DIFFERENCE IN FILL LEVEL ON OPPOSITE SIDES DOES NOT EXCEED 1'_0" AT ANY TIME.

F9 ALL FOUNDATION WALLS SHALL BE BRACED DURING THE OPERATION OF BACKFILLING AND COMPACTION. BRACING SHALL BE LEFT IN POSITION UNTIL PERMANENT RESTRAINTS ARE EFFECTIVE. BACKFILL NO FOUNDATION WALLS UNTIL PERMANENT LATERAL STRUCTURAL SUPPORT SYSTEM IS IN PLACE AND OF ADEQUATE STRENGTH TO WITHSTAND THE APPLIED LATERAL PRESSURES.

F10 LOCATE ALL EXISTING BELOW GRADE UTILITIES. PROVIDE UTILITIES WITH POSITIVE PROTECTION AGAINST DAMAGE DUE TO SETTLEMENT AND CONSTRUCTION OPERATIONS.

F11 USE SIDE FORMS FOR ALL FOOTINGS, PIERS, AND WALLS.

F12 THE SUB-BASE FOR THE SLAB ON GRADE SHALL BE AS DETAILED ON THE DRAWINGS PLACED AND COMPACTED IN LOOSE LAYERS NOT EXCEEDING 8 INCHES IN THICKNESS, TO 95% OF MODIFIED PROCTOR DENSITY AT OPTIMUM MOISTURE CONTENT.

F13 THE EXPOSED SUBGRADE SOILS MAY BE SENSITIVE TO DISTURBANCE AND STRENGTH DEGRADATION WHEN HIGH MOISTURE CONTENTS ARE PRESENT. MINIMIZE CONSTRUCTION TRAFFIC OVER EXPOSED SUBGRADES AND DO NOT ALLOW WATER TO POND ON THESE SUBGRADES. CONTROL SURFACE AND GROUND WATER BY PROPER SITE GRADING, SURFACE DRAINAGE CHANNELS, PERIMETER CUTOFF TRENCHES AND SUMP PUMP METHODS UNTIL GROUND FLOOR SLABS, PERIMETER WALLS AND WATERPROOFING ARE INSTALLED AND THE PERMANENT BUILDING DRAINAGE SYSTEM IS FULLY OPERATIONAL.

F14 RETAIN THE PERIMETER OF THE GENERAL EXCAVATION WHERE NECESSARY AND AS RECOMMENDED BY THE OWNER'S SOILS TESTING AGENCY. THE DESIGN, INSTALLATION, MAINTENANCE AND REMOVAL ARE THE COMPLETE AND SOLE RESPONSIBILITY OF THE CONTRACTOR. PROVIDE ALL MEASURES AND PRECAUTIONS NECESSARY TO PREVENT AND MINIMIZE SETTLEMENT OF EXISTING OR NEW CONSTRUCTION INSIDE OR OUTSIDE THE PROJECT LIMITS.

F15 SEE SPECIFICATION SECTION 312000 - EARTHMOVING FOR ADDITIONAL REQUIREMENTS.

CONCRETE

C1 ALL CONCRETE SHALL BE CONTROLLED CONCRETE.

C2 A QUALITY CONTROL PROGRAM OF FIELD TESTING AND INSPECTION SHALL BE PERFORMED ON ALL STRUCTURAL CONCRETE WORK IN ACCORDANCE WITH THE SPECIFICATIONS.

C3 CONCRETE SHALL HAVE THE FOLLOWING MINIMUM COMPRESSIVE STRENGTH AT 28-DAYS:

A.	FOUNDATION WALLS, PIERS, AND FOOTINGS	4000 PSI
B.	SLABS ON GRADE	3500 PSI
C.	ALL OTHER CONCRETE	3000 PSI

C4 ALL CONCRETE SHALL BE NORMAL WEIGHT CONCRETE WITH A NOMINAL AIR DRY DENSITY OF 145 PCF.

C5 FOR AIR ENTRAINMENT AND OTHER CONCRETE CHARACTERISTICS - SEE SPECIFICATIONS.

C6 PROVIDE CONSTRUCTION JOINTS WHERE SHOWN. OMIT NONE AND ADD NONE WITHOUT WRITTEN APPROVAL FROM THE ARCHITECT/ENGINEER. SUBMIT DRAWINGS SHOWING ALL PROPOSED CONSTRUCTION JOINT LOCATIONS FOR APPROVAL PRIOR TO PREPARATION OF AFFECTED REINFORCEMENT SHOP DRAWINGS.

C7 SIZES OF CONCRETE PLACEMENTS SHALL NOT EXCEED THE FOLLOWING:

A. WALLS - SECTION 60-FEET MAXIMUM LENGTH.

B. SLABS ON GRADE - PLACE IN ACCORDANCE WITH JOINT PATTERNS INDICATED ON PLAN. PLACE IN LINEAR STRIPS NOT TO EXCEED 30 FT. PLACEMENTS AREA SHALL NOT EXCEED "FORMED JOINTS" AS INDICATED ON PLAN WITHOUT PRIOR ACCEPTANCE BY THE ARCHITECT/ENGINEER. BEGIN SAWCUTTING OF THE SLAB AS SOON AS THE SAW DOES NOT CAUSE THE SURFACE TO BE TORN OR DAMAGED, BUT IN NO CASE MORE THAN 12 HOURS AFTER SLAB FINISHING OPERATIONS.

C8 MINIMUM ELAPSED TIME BETWEEN ADJACENT CONCRETE PLACEMENTS SHALL BE 48 HOURS.

C9 CONCRETE SLABS SHALL BE CAST SO THAT THE SLAB THICKNESS IS AT NO POINT LESS THAN THAT INDICATED ON THE DRAWINGS.

C10 CONCRETE MIX DESIGN FOR EACH TYPE AND STRENGTH OF CONCRETE SPECIFIED SHALL BE SUBMITTED FOR ARCHITECT/ENGINEER REVIEW 30-DAYS PRIOR TO PLACEMENT OF CONCRETE.

C11 WIRE BRUSH CLEAN AND MOISTEN ALL CONSTRUCTION JOINTS IMMEDIATELY PRIOR TO PLACING NEW CONCRETE.

C12 NO CALCIUM CHLORIDE SHALL BE USED IN ANY CONCRETE.

CONCRETE(CONTINUED)

C13 REFER TO ACI 305 FOR HOT WEATHER CONCRETE REQUIREMENTS AND ACI 306 FOR COLD WEATHER CONCRETE REQUIREMENTS.

C14 SEE SPECIFICATION SECTION 033100 - CONCRETE, REINFORCEMENT, AND FORMWORK FOR CONCRETE MIX CRITERIA AND ADDITIONAL REQUIREMENTS.

REINFORCING

R1 ALL BAR REINFORCEMENT SHALL CONFORM TO ASTM 615, GRADE 60.

R2 WELDED WIRE FABRIC REINFORCEMENT SHALL CONFORM TO ASTM A185.

R3 CLEARANCE OF MAIN REINFORCEMENT FROM ADJACENT SURFACES SHALL CONFORM TO THE FOLLOWING (UNLESS OTHERWISE SHOWN IN DETAIL):

A.	UNFORMED SURFACES IN CONTACT WITH GROUND (FOOTING OR WALL BOTTOM)	3 INCHES
B.	SLABS ON GRADE	2 1/2 INCHES
C.	FORMED SURFACES IN CONTACT WITH GROUND OR EXPOSED TO WEATHER	2 INCHES
D.	INTERIOR AND EXTERIOR STRUCTURAL SLABS	1 INCH
E.	INTERIOR WALL SURFACES	1 INCH
F.	IN ALL CASES, CLEARANCE NOT LESS THAN DIAMETER OF BARS.	

NOTE: MAXIMUM DEVIATION FROM THESE REQUIREMENTS SHALL BE +1/4" FOR SECTIONS TEN (10) INCHES OR LESS AND +1/2" FOR SECTIONS OVER TEN (10) INCHES THICK.

R4 REINFORCEMENT SHALL BE CONTINUOUS THROUGH ALL CONSTRUCTION JOINTS UNLESS OTHERWISE INDICATED ON DRAWINGS.

R5 WHERE REINFORCING IS NOT SHOWN ON THE DRAWINGS, PROVIDE REINFORCEMENT IN ACCORDANCE WITH APPLICABLE TYPICAL DETAILS OR SIMILAR TO THAT SHOWN FOR MOST NEARLY SIMILAR SITUATIONS, AS DETERMINED BY THE ARCHITECT/ENGINEER. IN NO CASE SHALL REINFORCEMENT BE LESS THAN MINIMUM PERMITTED BY THE APPLICABLE CODES.

R6 ALL WORKMANSHIP AND MATERIAL SHALL CONFORM TO THE "MANUAL OF STANDARD PRACTICE FOR DETAILING REINFORCED CONCRETE STRUCTURES" (ACI-315), AND BUILDING CODE REQUIREMENTS FOR REINFORCED CONCRETE (ACI-318).

R7 ALL REINFORCING SHALL BE INSPECTED AND APPROVED BY THE ARCHITECT/ENGINEER OR OWNER'S TESTING AGENCY BEFORE CONCRETE IS PLACED.

R8 WHERE CONTINUOUS BARS ARE CALLED FOR, THEY SHALL BE RUN CONTINUOUSLY AROUND CORNERS, LAPPED AT NECESSARY SPLICES AND HOOKED AT DISCONTINUOUS ENDS.

R9 WELDED WIRE FABRIC SHALL BE LAPPED ONE FULL MESH PANEL OR 6" MINIMUM.

R10 ALL REINFORCING SPLICES SHALL CONFORM TO THE TABLE(S) PROVIDED IN THE GENERAL NOTES FOR EACH STRENGTH OF CONCRETE BUT IN NO CASE LESS THAN THE REQUIREMENTS OF THE LATEST EDITION OF ACI-318.

R11 SLABS AND WALLS SHALL NOT BE SLEEVED OR BOXED OUT OR HAVE THEIR REINFORCING INTERRUPTED EXCEPT AS SPECIFICALLY NOTED ON THE DRAWINGS. PROVIDE ADDITIONAL REINFORCEMENT AROUND OPENINGS AS SHOWN IN THE DETAILS.

R12 SUBMIT CHECKED SHOP DRAWINGS TO THE ARCHITECT/ENGINEER FOR REVIEW PRIOR TO FABRICATION OF REINFORCING. DRAWINGS SHALL SHOW REINFORCING DETAILS, INCLUDING SIZE AND SPACING OF BARS AND SUPPORT DETAILS. SHOP DRAWINGS SHALL INDICATE CONSTRUCTION JOINTS, CURBS, DEPRESSIONS, SLEEVES, AND OPENINGS, ETC... WITH ALL ADDITIONAL REINFORCING REQUIRED.

R13 BAR SUPPORTS SHALL BE GALVANIZED OR STAINLESS STEEL. IN ADDITION, BAR SUPPORTS IN CONTACT WITH EXPOSED SURFACES SHALL BE PLASTIC TIPPED.

R14 SEE SPECIFICATION SECTION 033000 - CAST IN PLACE CONCRETE FOR ADDITIONAL REQUIREMENTS.

SLAB, AND WALL REINFORCING LAP SPLICE LENGTHS

LAP SPLICE LENGTHS FOR REINFORCING IN 4000 PSI CONCRETE ARE AS FOLLOWS:

BAR SIZE	TENSION SPLICE TOP	TENSION SPLICE OTHER	DEVELOPMENT LENGTH
3	21	15	13
4	29	20	17
5	36	26	21
6	43	31	25
7	54	39	32
8	71	51	42
9	90	65	53
10	115	82	68
11	163	101	83

LAP SPLICE LENGTHS FOR REINFORCING IN 3000 PSI CONCRETE ARE AS FOLLOWS:

BAR SIZE	TENSION SPLICE TOP	TENSION SPLICE OTHER	DEVELOPMENT LENGTH
3	21	15	13
4	29	20	17
5	36	26	21
6	46	33	27
7	63	45	37
8	82	59	49
9	104	75	61
10	132	95	78
11	163	116	96

REINFORCING(CONTINUED)

NOTES:

1. LAPPED SPLICE LENGTHS BASED ON ASTM A-615, GRADE 60, REBAR.
2. REINFORCING BARS ARE CLASSED AS TOP BARS WHEN MORE THAN 12" OF CONCRETE IS CAST BENEATH RESPECTIVE REINFORCING BAR.
3. COMPRESSION SPLICES PERMISSIBLE ONLY WHERE SPECIFICALLY NOTED ON THE DRAWINGS, DETAILS OR SCHEDULES.
4. TENSION SPLICES SHALL BE USED IN ALL BEAMS, SLABS AND WALLS UNLESS OTHERWISE NOTED.
5. WHEN LAPPING LARGER BAR WITH SMALLER BAR, LAP LENGTH FOR SMALLER BAR SHALL GOVERN RESPECTIVE SPLICE.
6. SPLICE CONTINUOUS TOP REINFORCING BARS AT CENTER OF CLEAR SPAN WITH COMPRESSION SPLICES.
7. SPLICE CONTINUOUS BOTTOM REINFORCING BARS AT CENTER OF SUPPORTING ELEMENT WITH COMPRESSION SPLICES.
8. ALL SPLICE LENGTHS NOTED IN INCHES.

POST-INSTALLED ANCHORS

PI1 EXCEPT WHERE INDICATED ON THE DRAWINGS, POST INSTALLED ANCHORS SHALL CONSIST OF THE FOLLOWING ANCHOR TYPES AND INSTALLED IN ACCORDANCE WITH THEIR RESPECTIVE ICC-ES REPORT AND MANUFACTURER'S PUBLISHED INSTALLATION INSTRUCTIONS:

APPLICATION	ANCHORING SYSTEM	ICC-ES REPORT
ANCHORAGE TO CONCRETE	HILTI HY 200 V3 ADHESIVE	ESR-4878
REBAR DOWELING INSTALLATION	HILTI HY 200 V3 WITH SAFESET	ESR-3187
ANCHORAGE TO SOLID GROUTED MASONRY	HILTI HY 270 ADHESIVE WITH SAFESET	ESR-4143

BASIS OF DESIGN INCLUDES THE FOLLOWING DESIGN PARAMETERS:

(1) CRACKED CONCRETE
(2) WATER-SATURATED CONCRETE
(3) BASE MATERIAL TEMPERATURE OF 23-104 DEGREES FAHRENHEIT
(4) ALLOWABLE DRILLING METHOD: HAMMER-DRILL HOLLOW DRILL BIT SYSTEM
(5) CURRENT ICC-ES REPORT WITH APPROVAL FOR DEVELOPMENT OF BAR USING ACI PROVISIONS FOR EMBEDMENT DEPTHS GREATER THAN 20 BAR DIAMETERS

PI2 ACI 318 REQUIRES ADHESIVE ANCHORS TO BE INSTALLED IN CONCRETE HAVING A MINIMUM AGE OF 21 DAYS AT THE TIME OF ANCHOR INSTALLATION.

PI3 FOR ADHESIVE ANCHORS INSTALLED IN CONCRETE AGED LESS THAN 21 DAYS, CONTACT ENGINEER TO RE-EVALUATE THE ANCHOR DESIGN BASED ON THE CONCRETE STRENGTH AT THE TIME OF INSTALLATION AND USE A BOND STRENGTH VALUE FOR WATER SATURATED CONCRETE. SITE TESTING IS RECOMMENDED TO VERIFY THE FASTENING CAPACITY.

PI4 ANCHOR CAPACITY USED IN DESIGN MUST BE BASED ON THE TECHNICAL DATA PUBLISHED BY ANCHOR MANUFACTURER OR SUCH OTHER METHOD AS APPROVED BY THE STRUCTURAL ENGINEER. SUBSTITUTION REQUESTS FOR ALTERNATE PRODUCTS MUST BE APPROVED IN WRITING BY THE STRUCTURAL ENGINEER. PRIOR TO USE, CONTRACTOR MUST PROVIDE CALCULATIONS STAMPED BY PROFESSIONAL ENGINEER DEMONSTRATING THAT THE SUBSTITUTED PRODUCT IS CAPABLE OF ACHIEVING THE PERFORMANCE VALUES OF THE SPECIFIED PRODUCT. SUBSTITUTIONS WILL BE EVALUATED BY THEIR HAVING AN ICC ESR SHOWING COMPLIANCE WITH THE RELEVANT BUILDING CODE FOR SEISMIC USES, LOAD RESISTANCE, INSTALLATION CATEGORY, AND AVAILABILITY OF COMPREHENSIVE INSTALLATION INSTRUCTIONS. ADHESIVE ANCHOR EVALUATION WILL ALSO CONSIDER CREEP, IN-SERVICE TEMPERATURE, AND INSTALLATION TEMPERATURE. CONTRACTOR IS RESPONSIBLE FOR PREPARATION OF SHOP DRAWINGS IN ACCORDANCE WITH THE DESIGN DOCUMENTS. SUBMIT SHOP DRAWINGS TO THE ENGINEER FOR APPROVAL.

PI5 THE DESIGN OF STRAIGHT POST-INSTALLED REINFORCING BARS TO CONCRETE MUST BE PERFORMED PER THE DEVELOPMENT AND SPLICE REQUIREMENTS OF ACI 318. THE POST-INSTALLED REINFORCING BAR SYSTEM IS AN ALTERNATIVE TO CAST-IN-PLACE REINFORCING BARS GOVERNED BY ACI 318 AND BCNYS CHAPTER 19. SUBSTITUTION REQUESTS FOR ALTERNATE PRODUCTS MUST BE APPROVED IN WRITING BY THE STRUCTURAL ENGINEER PRIOR TO USE. CONTRACTOR MUST PROVIDE SIGNED AND SEALED CALCULATIONS SEALED BY PROFESSIONAL ENGINEER. THE EPOXY SYSTEM MUST BE TESTED IN ACCORDANCE WITH THE ICC-ES ACCEPTANCE CRITERIA FOR POST-INSTALLED EPOXY ANCHORS IN CONCRETE ELEMENTS (AC308), TABLE 3.8. TECHNICAL DATA MUST BE PUBLISHED IN AN ICC-ES EVALUATION SERVICE REPORT SHOWING COMPLIANCE WITH IBC.

PI6 CONTINUOUSLY THREADED CARBON STEEL ANCHOR ELEMENTS MUST BE HILTI ASTM F1554 COMPLIANT UNLESS NOTED OTHERWISE.

PI7 DRILL HOLES WITH ROTARY IMPACT HAMMER DRILLS USING HOLLOW DRILL BIT WITH INTEGRAL VACUUM CLEAN AS PERMITTED BY ICC-ESR. USE OF DIAMOND CORE BIT WITH ROUGHENING TOOL SHALL BE PERMITTED AFTER ENGINEERS OF RECORD APPROVAL. UNLESS OTHERWISE SHOWN ON THE DRAWINGS, ALL HOLES MUST BE DRILLED PERPENDICULAR TO THE CONCRETE SURFACE.

PI8 INSTALL ANCHORS PER THE MANUFACTURER INSTRUCTIONS, AS INCLUDED IN THE ANCHOR PACKAGING. THE CONTRACTOR MUST ARRANGE AN ANCHOR MANUFACTURER'S REPRESENTATIVE TO PROVIDE ONSITE INSTALLATION TRAINING FOR ALL OF THEIR ANCHORING PRODUCTS SPECIFIED. THE STRUCTURAL ENGINEER MUST RECEIVE DOCUMENTED CONFIRMATION THAT ALL OF THE CONTRACTOR'S PERSONNEL WHO INSTALL ANCHORS ARE TRAINED PRIOR TO THE COMMENCEMENT OF INSTALLING ANCHORS.

PI9 INSTALLATION OF ADHESIVE ANCHORS HORIZONTALLY OR UPWARDLY INCLINED TO SUPPORT SUSTAINED TENSION LOADS MUST BE PERFORMED BY PERSONNEL CERTIFIED BY AN APPLICABLE CERTIFICATION PROGRAM. CERTIFICATION MUST INCLUDE WRITTEN AND PERFORMANCE TESTS IN ACCORDANCE WITH THE ACI/CRSI ADHESIVE ANCHOR INSTALLER CERTIFICATION PROGRAM, OR APPROVED EQUIVALENT.

PI10 ANCHOR CAPACITY IS DEPENDENT UPON SPACING BETWEEN ADJACENT ANCHORS AND PROXIMITY OF ANCHORS TO EDGE OF CONCRETE. INSTALL ANCHORS IN ACCORDANCE WITH SPACING AND EDGE CLEARANCES INDICATED ON THE DRAWINGS.

ROUGH CARPENTRY AND STRUCTURAL LAMINATED MEMBERS

RC1 LUMBER SHALL COMPLY WITH PS20 "AMERICAN SOFTWOOD LUMBER STANDARD" WITH APPLICABLE GRADING RULES.

RC2 ALL LUMBER SHALL BE VISUALLY GRADED OR MACHINE RATED SPRUCE-PINE-FIR (SPF) STUD GRADE, DOUGLAS FIR-LARCH (DFL) No. 2 GRADE, OR MACHINE RATED SOUTHERN PINE (SP) 2400f-2.0E MSR WITH THE FOLLOWING MINIMUM ALLOWABLE UNIT STRESSES:

		SPF STUD:	DFL No. 2:
Fb	EXTREME FIBER IN BENDING	675 PSI	900 PSI
Fv	HORIZONTAL SHEAR, PARALLEL TO GRAIN	135 PSI	180 PSI
Fc||	COMPRESSION PARALLEL TO GRAIN	725 PSI	1,350 PSI
Fc/-	COMPRESSION PERPENDICULAR TO GRAIN	425 PSI	625 PSI
E	MODULUS OF ELASTICITY	1,200,000 PSI	1,600,000 PSI

ROUGH CARPENTRY AND STRUCTURAL LAMINATED MEMBERS(CONTINUED)

RC3 ALL LUMBER SHALL HAVE A MAXIMUM MOISTURE CONTENT AT TIME OF DRESSING OF 19%.

RC4 PLYWOOD SHALL CONFORM TO REQUIREMENTS OF PS1 "U.S. PRODUCT STANDARD FOR CONSTRUCTION AND INDUSTRIAL PLYWOOD" APA PRP-108 "PERFORMANCE STANDARD AND POLICIES FOR STRUCTURAL USE PANELS", OR UNDER PS-2-92, "PERFORMANCE STANDARD FOR WOOD BASED STRUCTURAL PANELS."

RC5 FACTORY MARK EACH CONSTRUCTION PANEL WITH APA TRADEMARK INDICATING COMPLIANCE WITH GRADE REQUIREMENTS AS FOLLOWS:

SUBFLOORING, WALL AND ROOF SHEATHING: EXTERIOR EXPOSURE 1.

WALL SHEATHING, OSB OR PLYWOOD: EXPOSURE 1

RC6 PROVIDE FASTENERS AND ANCHORAGE AS INDICATED AND AS RECOMMENDED BY APPLICABLE STANDARDS, COMPLYING WITH FEDERAL STANDARDS FOR NAILS, STAPLES, SCREWS, BOLTS, NUTS, WASHERS AND ANCHORING DEVICES.

RC7 WHERE ROUGH CARPENTRY WORK IS EXPOSED TO GROUND OR WEATHER, USE FASTENERS WITH A HOT-DIP ZINC COATING (ASTM A153).

RC8 PRESSURE TREATED LUMBER WITH WATER BORNE PRESERVATIVES TO COMPLY WITH AWPB LP-2 FOR ALL LUMBER EXPOSED TO MOISTURE INCLUDING BUT NOT LIMITED TO WOOD CANTS, NAILERS, BLOCKING, STRIPPING, MEMBERS IN CONNECTION WITH ROOFING, FLASHING, VAPOR BARRIERS AND WATERPROOFING, SILLS, SLEEPERS, MEMBERS IN CONTACT WITH MASONRY OR CONCRETE, AND MEMBERS LESS THAN 18" ABOVE GRADE.

RC9 STRUCTURAL LAMINATED MEMBERS SHALL BE ENGINEERED LUMBER CONSISTING OF THIN PLYWOOD VENEERS SECURELY BONDED TOGETHER. ACCEPTABLE PRODUCTS ARE MICROLLAM BY TRUS JOIST CORPORATION, GANG-LAM LVL BY LOUISIANA PACIFIC. EQUIVALENT SUBSTITUTIONS MAY BE USED IF SUBMITTED TO, AND ACCEPTED BY, THE ARCHITECT/ENGINEER. INSTALL IN ACCORDANCE WITH MANUFACTURERS RECOMMENDATIONS.

PREFABRICATED WOOD TRUSSES

WT1 SUBMIT ENGINEERED AND CHECKED TRUSS SHOP DRAWINGS TO THE ARCHITECT/ENGINEER FOR REVIEW. SHOW SHOP FABRICATION DETAILS, FIELD ASSEMBLY DETAILS AND ERECTION PLANS FOR ALL PREFABRICATED WOOD TRUSSES.

WT2 SUBMIT TRUSS MEMBER, METAL PLATE CONNECTOR, BEAM TO TRUSS AND TRUSS TO TRUSS CONNECTION DESIGN CALCULATIONS, PREPARED AND SEALED BY A QUALIFIED STRUCTURAL ENGINEER REGISTERED IN THE STATE OF NEW YORK, TO THE ARCHITECT/ENGINEER FOR REVIEW PRIOR TO FABRICATION.

WT3 DESIGN ALL TRUSS MEMBERS AND CONNECTIONS IN ACCORDANCE WITH THE LATEST EDITIONS OF TPI "DESIGN SPECIFICATION FOR METAL PLATE CONNECTED WOOD TRUSSES" AND THE NFPA "NATIONAL DESIGN SPECIFICATION FOR WOOD CONSTRUCTION" TO SUPPORT ALL LOAD CONFIGURATIONS INDICATED.

WT4 ALL LUMBER SHALL BE NEW LUMBER.

WT5 TRUSS CONNECTOR PLATES SHALL BE FORMED FROM NEW SHEET STEEL, 20 GAGE MINIMUM, CONFORMING TO ASTM A446 WITH A MINIMUM YIELD STRENGTH OF 33,000 PSI. CONNECTOR PLATES SHALL BE HOT-DIPPED GALVANIZED, COATING DESIGNATION G60.

WT6 PROVIDE TRUSSES WITH AN UPWARD CAMBER WHICH OFFSETS TRUSS DEFLECTIONS CAUSED BY MEMBER SELF-WEIGHT, ROOF SHEATHING, HUNG CEILING AND MECHANICAL UNITS.

WT7 THE TRUSS MANUFACTURER SHALL DESIGN AND PROVIDE ALL TEMPORARY TRUSS BRACING, BRIDGING AND SHORING AS REQUIRED FOR THE SAFETY, STABILITY AND ALIGNMENT OF THE ROOF AND/OR FLOOR TRUSS SYSTEM. TEMPORARY BRACING SHALL REMAIN IN PLACE UNTIL THE PERMANENT LATERAL LOAD RESISTING SYSTEM IS FULLY OPERATIONAL.

WT8 HANDLE AND ERECT ALL TRUSSES IN SUCH A MANNER AS TO AVOID PERMANENT STRUCTURAL DAMAGE TO TRUSS MEMBERS OR CONNECTIONS. HOIST TRUSSES INTO POSITION ONLY AT POINTS SPECIFICALLY DESIGNED AND DESIGNATED BY THE TRUSS MANUFACTURER.

WT9 DO NOT FIELD CUT OR MODIFY TRUSS MEMBERS OR CONNECTIONS WITHOUT THE PRIOR REVIEW OR ACCEPTANCE OF THE ARCHITECT/ENGINEER OR TRUSS MANUFACTURER.

WT10 SEE SPECIFICATION SECTION 061920 - PREFABRICATED WOOD TRUSSES FOR ADDITIONAL REQUIREMENTS.

MISCELLANEOUS

M1 CONTRACTOR SHALL VERIFY ALL DIMENSIONS ON THE JOB. VERIFICATION OF EXISTING DIMENSIONS AND CONDITIONS SHALL BE DONE PRIOR TO PREPARATION OF SHOP DRAWINGS.

M2 ALL OPENINGS THROUGH SLABS AND WALLS ARE NOT SHOWN. PROVIDE UNIT PRICES FOR ADDITIONAL FRAMING AND REINFORCING.

M3 CONSULT THE ARCHITECTURAL, MECHANICAL AND ELECTRICAL DRAWINGS FOR LOCATIONS AND DIMENSIONS OF CHASES, INSERTS, OPENINGS, SLEEVES, WASHES, DRIPS, REVEALS, DEPRESSIONS AND OTHER PROJECT REQUIREMENTS.

M4 ALL WORK SHALL CONFORM TO THE LATEST EDITIONS OF THE BUILDING CODE OF NEW YORK STATE, THE AISC CODE, THE ACI BUILDING CODE (ACI 318, ACI 530), THE AMERICAN WELDING SOCIETY CODE AND ALL OTHER APPLICABLE ASTM STANDARDS. IN CASES OF CONFLICT, THE MOST STRINGENT SHALL GOVERN.

M5 TYPICAL DETAILS APPLY TO ALL DRAWINGS AND SHALL BE USED EXCEPT WHERE OTHERWISE SHOWN OR NOTED.

CJS ARCHITECTS
BUFFALO | ROCHESTER
www.cjsarchitects.com

ARCHITECT
CJS ARCHITECTS
755 SENECA STREET, BUFFALO, NY 14210
(716)716.856.6448)

CIVIL.STRUCTURAL ENGINEER
TREDEO ENGINEERS
755 SENECA STREET
BUFFALO, NY 14210
(716)716.876.7147)

MEP.FP ENGINEER
BUFFALO ENGINEERING, P.C.
4245UNION ROAD, SUITE 204 BUFFALO, NY 14425
(716.633.5300)

COPYRIGHT©2026 TREDEO ENGINEERS
ALL RIGHTS RESERVED. NO PART OF THIS DRAWING MAY BE REPRODUCED OR COPIED IN ANY FORM BY ANY MEANS WITHOUT THE WRITTEN PERMISSION OF THE ENGINEERS.

REPRODUCTION OF THIS DRAWING FOR CONSTRUCTION OF SHOP AND/OR FIELD DETAIL DRAWINGS IS EXPRESSLY FORBIDDEN.

UNAUTHORIZED ALTERATION AND/OR DUPLICATION OF THIS DRAWING IS A VIOLATION OF SECTION 7209, PROVISION 2, OF THE NEW YORK STATE EDUCATION LAW.

100% CD

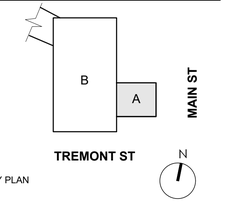

KEY PLAN

RIVIERA THEATRE

RIVIERA THEATRE GREEN ROOM

67 WEBSTER ST.
NORTH TONAWANDA, NY
14120

REV. #	DESCRIPTION	DATE

JOB NO.	2234 (T.E. JOB #25-92)
SCALE	--
ISSUE DATE	10.21.2026
DRAWN BY	CAS
CHECKED BY	MJE

THIS IS A SINGLE SHEET OF A COHESIVE SET OF CONSTRUCTION DOCUMENTS (INCLUDING DRAWINGS AND SPECIFICATIONS). INTERPRETATION OF THE INFORMATION AS PRESENTED SHOULD BE BASED ON THE ENTIRE SET OF DOCUMENTS.

DRAWING TITLE

GENERAL NOTES

S-201a

CONSTRUCTION DOCUMENTS

DESIGN LOADS

CEILINGS 5 PSF

ROOF SNOW LOAD

GROUND SNOW LOAD, Pg = 56 PSF
SNOW EXPOSURE FACTOR, Ce = 1.00
THERMAL FACTOR, Ct = 1.15
FLAT ROOF SNOW LOAD, Pf = 45.0 PSF (Service)

WIND LOAD

ULTIMATE DESIGN WIND SPEED 109 MPH
RISK CATEGORY II
WIND EXPOSURE C
APPLICABLE INTERNAL PRESSURE COEFFICIENT +/- 0.18

COMPONENTS AND CLADDING

		ULTIMATE		SERVICE	
Zone Per Figure 1609.6(2)	Effective Wind Area (SF)	C&C Loads Adjusted for Exposure and Height (PSF)		C&C Loads Adjusted for Exposure and Height (PSF)	
1	10	8.5	-33.3	6.0	-23.3
1	20	8.7	-32.5	6.1	-22.7
1	50	9.2	-24.5	6.5	-17.1
1	100	6.7	-26.2	4.7	-18.4
1'	10	8.5	-19.2	6.0	-13.4
1'	20	8.7	-19.2	6.1	-13.4
1'	50	9.2	-19.2	6.5	-13.4
1'	100	6.7	-19.2	4.7	-13.4
2	10	8.5	-44.0	6.0	-30.8
2	20	8.7	-43.8	6.1	-30.7
2	50	9.2	-43.3	6.5	-30.3
2	100	6.7	-42.2	4.7	-29.5
3	10	8.5	-59.9	6.0	-42.0
3	20	8.7	-58.2	6.1	-40.7
3	50	9.2	-52.1	6.5	-36.5
3	100	6.7	-42.2	4.7	-29.5
4	10	20.9	-22.7	14.6	-15.9
4	20	20.0	-21.8	14.0	-15.3
4	50	19.2	-20.9	13.4	-14.6
4	100	17.4	-19.2	12.2	-13.4
4	500	15.6	-17.4	10.9	-12.2
5	10	20.9	-28.0	14.6	-19.6
5	20	20.0	-26.2	14.0	-18.4
5	50	19.2	-23.6	13.4	-16.5
5	100	17.4	-21.8	12.2	-15.3
5	500	15.6	-17.4	10.9	-12.2

SEISMIC LOAD

RISK CATEGORY II
SEISMIC IMPORTANCE FACTOR, Ie = 1.00
MAPPED SPECTRAL RESPONSE COEFFICIENTS S/S = 0.170
S/1 = 0.040
SITE CLASS D
DESIGN SPECTRAL RESPONSE COEFFICIENTS S/DS = 0.14
S/D1 = 0.057
SEISMIC DESIGN CATEGORY A
BASIC SEISMIC FORCE RESISTING SYSTEM BEARING WALL -
LIGHT FRAME WALLS WITH SHEAR PANELS: WOOD STRUCTURAL PANELS

IF BUILDING IS CLASSIFIED AS SDC A, IT NEED ONLY COMPLY WITH ASCE 7 SECTION 1.4:
GENERAL STRUCTURAL INTEGRITY.
THE WIND LOADS APPLIED TO THE BUILDING EXCEED
THE MINIMUM SEISMIC FORCED OF 1% BUILDING WEIGHT.

BUILDING IS NOT DESIGNED FOR ADDITIONAL HORIZONTAL OR VERTICAL EXTENSIONS.

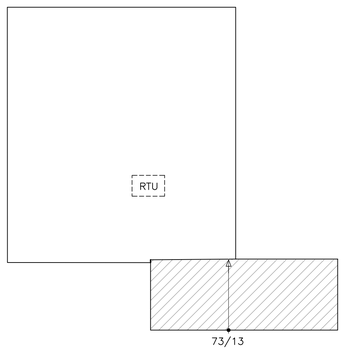

SURCHARGE LOADS PRESENTED THUS:
Pd (PSF, SERV) / w (FT)
IN ADDITION TO Pf VALUES PRESENTED

SUPERIMPOSED DRIFT SURCHARGE LOAD DIAGRAM

CJS ARCHITECTS
BUFFALO | ROCHESTER
www.cjsarchitects.com

ARCHITECT
CJS ARCHITECTS
755 SENECA STREET, BUFFALO, NY 14210
(716)716.856.6448

COPYRIGHT©2026 TREDO ENGINEERS
ALL RIGHTS RESERVED. NO PART OF THIS DRAWING MAY BE REPRODUCED OR COPIED IN ANY FORM BY ANY MEANS WITHOUT THE WRITTEN PERMISSION OF THE ENGINEERS.

REPRODUCTION OF THIS DRAWING FOR SHOP DRAWING PREPARATION OF SHOP AND/OR FIELD DETAIL DRAWINGS IS EXPRESSLY FORBIDDEN.

UNAUTHORIZED ALTERATION AND/OR DUPLICATION OF THIS DRAWING IS A VIOLATION OF SECTION 7209, PROVISION 2, OF THE NEW YORK STATE EDUCATION LAW.

CIVIL.STRUCTURAL ENGINEER
TREDO ENGINEERS
755 SENECA STREET
BUFFALO, NY 14210
(716)716.876.7147

MEP.FP ENGINEER
BUFFALO ENGINEERING, P.C.
4245UNION ROAD, SUITE 204 BUFFALO, NY 14425
(716.633.5300)

100% CD

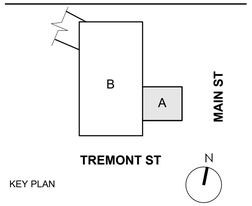

KEY PLAN

RIVIERA THEATRE

RIVIERA THEATRE GREEN ROOM

67 WEBSTER ST.
NORTH TONAWANDA, NY
14120

REV. #	DESCRIPTION	DATE

JOB NO.	2234 (T.E. JOB #25-92)
SCALE	--
ISSUE DATE	10.21.2026
DRAWN BY	CAS
CHECKED BY	MJE

THIS IS A SINGLE SHEET OF A COHESIVE SET OF CONSTRUCTION DOCUMENTS (INCLUDING DRAWINGS AND SPECIFICATIONS). INTERPRETATION OF THE INFORMATION AS PRESENTED SHOULD BE BASED ON THE ENTIRE SET OF DOCUMENTS.

DRAWING TITLE

GENERAL NOTES

S-201b

CONSTRUCTION DOCUMENTS

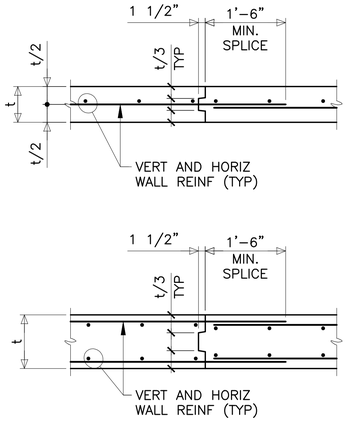

3 WALL CONSTRUCTION JOINT

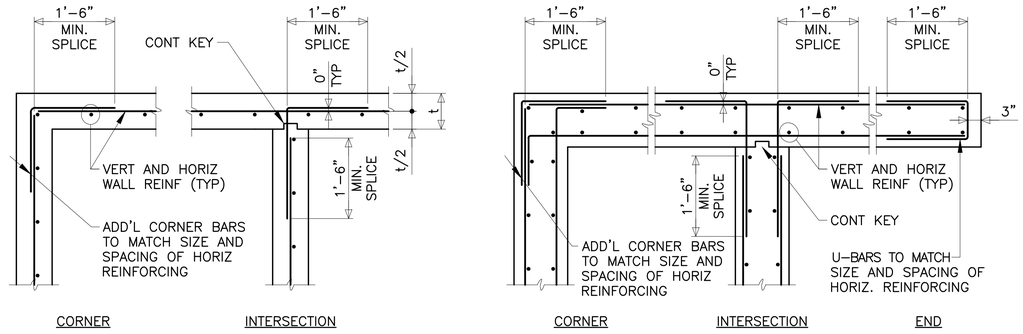

2 HORIZONTAL WALL REINFORCEMENT

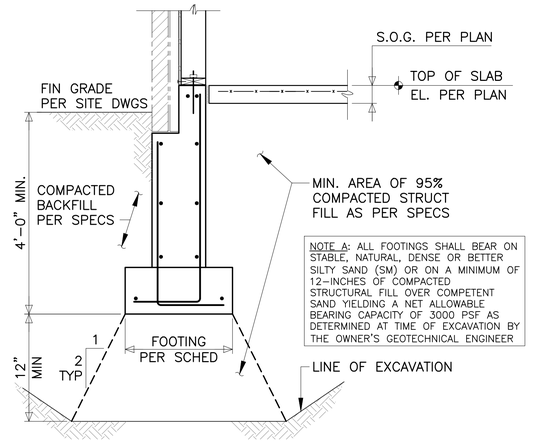

1 EXTERIOR FOUNDATION WALL ON STRUCTURAL FILL

NOTE: USE OF VAPOR RETARDER REQUIRES WRITTEN ASSURANCE FROM FLATWORK CONTRACTOR THAT CURLING OR CUPPED SLAB WILL BE GROUND SMOOTH AND LEVEL IF REQUIRED

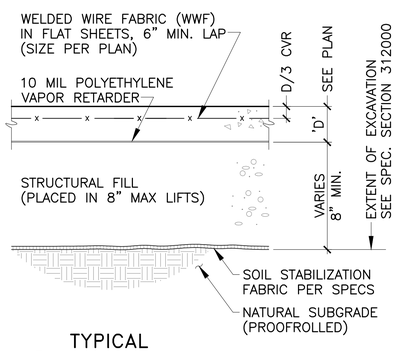

7 TYPICAL SLAB ON GRADE DETAIL

FOR AREAS WITH VCT, TILE OR CARPET COORDINATE WITH ARCH DRAWINGS

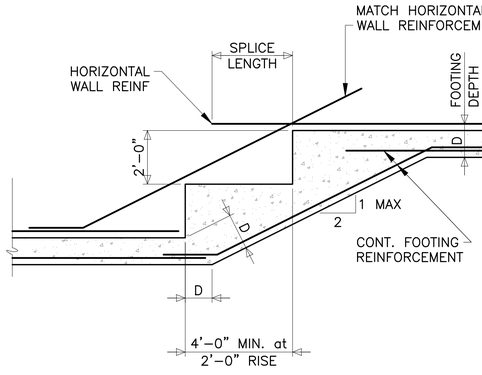

6 ELEVATION OF STEPPED WALL FOOTING

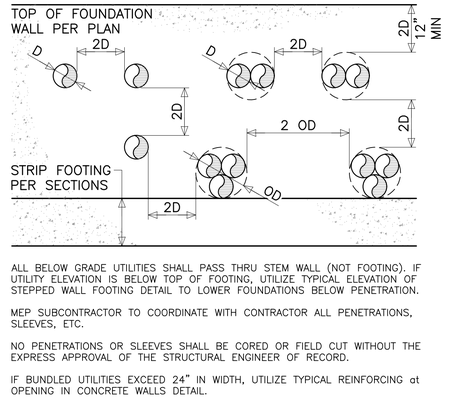

ALL BELOW GRADE UTILITIES SHALL PASS THRU STEM WALL (NOT FOOTING). IF UTILITY ELEVATION IS BELOW TOP OF FOOTING, UTILIZE TYPICAL ELEVATION OF STEPPED WALL FOOTING DETAIL TO LOWER FOUNDATIONS BELOW PENETRATION.

MEP SUBCONTRACTOR TO COORDINATE WITH CONTRACTOR ALL PENETRATIONS, SLEEVES, ETC.

NO PENETRATIONS OR SLEEVES SHALL BE CORED OR FIELD CUT WITHOUT THE EXPRESS APPROVAL OF THE STRUCTURAL ENGINEER OF RECORD.

IF BUNDLED UTILITIES EXCEED 24" IN WIDTH, UTILIZE TYPICAL REINFORCING at OPENING IN CONCRETE WALLS DETAIL.

5 TYPICAL SLEEVE SPACE DETAIL IN FROST WALL

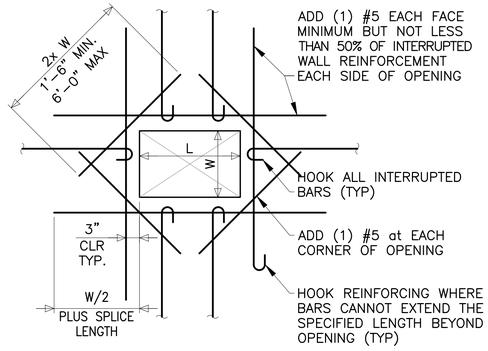

4 REINFORCING at OPENINGS IN CONCRETE WALLS

(4'–0" SQ. MAXIMUM OPENING SIZE)

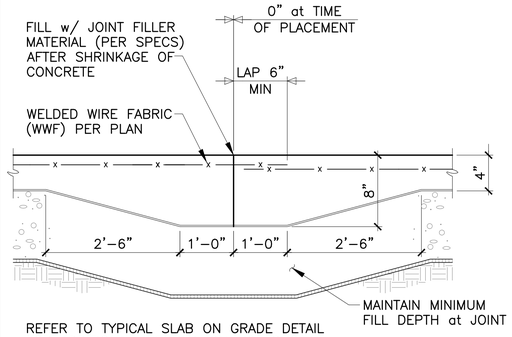

REFER TO TYPICAL SLAB ON GRADE DETAIL FOR ADDITIONAL INFORMATION NOT SHOWN

11 FORMED JOINT DETAIL (FJ) at SLAB ON GRADE

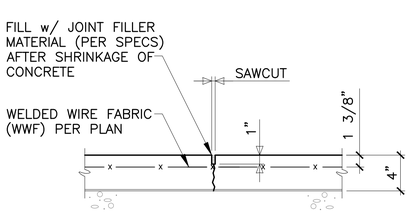

SAWCUT JOINT (PER SPECS)
REFER TO TYPICAL SLAB ON GRADE DETAIL FOR ADDITIONAL INFORMATION NOT SHOWN

10 SAWCUT JOINT DETAIL (SJ) at SLAB ON GRADE

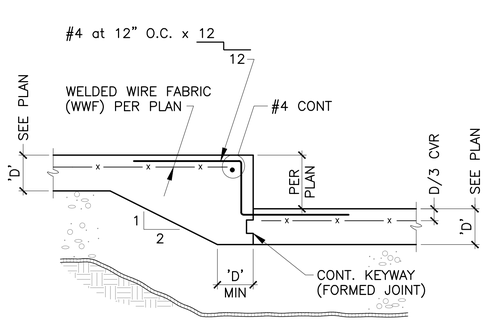

REFER TO TYPICAL SLAB ON GRADE DETAIL FOR ADDITIONAL INFORMATION NOT SHOWN

9 DEPRESSED SLAB ON GRADE DETAIL

(DEPTH ≥ TO TOTAL SLAB THICKNESS)

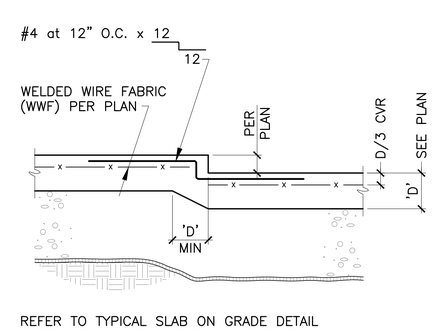

REFER TO TYPICAL SLAB ON GRADE DETAIL FOR ADDITIONAL INFORMATION NOT SHOWN

8 DEPRESSED SLAB ON GRADE DETAIL

(DEPTH LESS THAN TOTAL SLAB THICKNESS)

CJS ARCHITECTS
BUFFALO | ROCHESTER
www.cjsarchitects.com

ARCHITECT
CJS ARCHITECTS
755 SENECA STREET, BUFFALO, NY 14210
(716)716.856.6448)

CIVIL,STRUCTURAL ENGINEER
TREDO ENGINEERS
755 SENECA STREET
BUFFALO, NY 14210
(716)716.876.7147)

MEP,FP ENGINEER
BUFFALO ENGINEERING, P.C.
4245UNION ROAD, SUITE 204 BUFFALO, NY 14425
(716.633.5300)

COPYRIGHT©2026 TREDO ENGINEERS
ALL RIGHTS RESERVED. NO PART OF THIS DRAWING MAY BE REPRODUCED OR COPIED IN ANY FORM BY ANY MEANS WITHOUT THE WRITTEN PERMISSION OF THE ENGINEERS.

REPRODUCTION OF THIS DRAWING FOR CONSTRUCTION ON OF SHOP AND/OR FIELD DETAIL DRAWINGS IS EXPRESSLY FORBIDDEN.

UNAUTHORIZED ALTERATION AND/OR DUPLICATION OF THIS DRAWING IS A VIOLATION OF SECTION 7209, PROVISION 2, OF THE NEW YORK STATE EDUCATION LAW.

100% CD

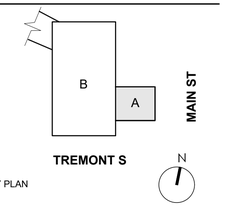

KEY PLAN

RIVIERA THEATRE

RIVIERA THEATRE GREEN ROOM

67 WEBSTER ST.
NORTH TONAWANDA, NY
14120

REV. #	DESCRIPTION	DATE

JOB NO.	2234 (T.E. JOB #25-92)
SCALE	N.T.S.
ISSUE DATE	10.21.2026
DRAWN BY	CAS
CHECKED BY	MJE

THIS IS A SINGLE SHEET OF A COHESIVE SET OF CONSTRUCTION DOCUMENTS (INCLUDING DRAWINGS AND SPECIFICATIONS). INTERPRETATION OF THE INFORMATION AS PRESENTED SHOULD BE BASED ON THE ENTIRE SET OF DOCUMENTS.

DRAWING TITLE

TYPICAL DETAILS

S-202

CONSTRUCTION DOCUMENTS

STUDWALL BEARING HEADER SCHEDULE		
MARK	SIZE	MINIMUM BEARING EACH END
H1	(3) 2x6 DFL#2	(1) 2x
H2	(3) 1 3/4 x 9 1/4 1.9E LVL	(2) 2x
H3	(3) 1 3/4 x 11 1/4 1.9E LVL	(3) 2x

NOTES

1. ALL HEADERS TO HAVE A MINIMUM BEARING AS SHOWN
2. COORDINATE OPENING SIZE AND LOCATION WITH ARCH DRAWINGS
3. SEE ARCH DRAWINGS FOR NON–LOAD BEARING HEADERS

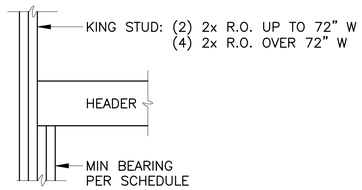

HEADER BEARING

3 STUDWALL BEARING HEADER SCHEDULE

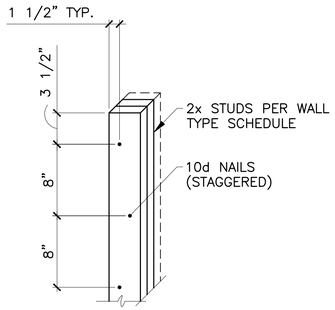

2 TYP. BUILT–UP STUD DETAIL

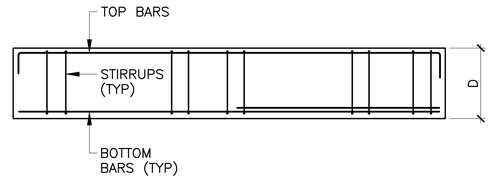

NOTES:

1. PROVIDE #4 at 12" EA FACE CONT. FACE BARS IN BEAMS OVER 18" DEEP.
2. PROVIDE #4 TIES at 12" MIN. STIRRUPS IN ALL BEAMS (UON).
3. PLACE TOP REINFORCING IN ONE LAYER WHERE POSSIBLE.
4. SEE SECTIONS FOR TOP AND BOTTOM REINFORCING.

1 GRADE BEAM REINFORCING DETAIL

EXTERIOR MASONRY LINTEL SCHEDULE			
THIS SCHEDULE PERTAINS TO ALL OPENINGS AND RECESSES IN NON–BEARING MASONRY WALLS. LOCATION AND SIZE AS PER ARCH AND/OR MECH DRAWINGS.			
CMU THICKNESS	LINTEL SIZE	MAX. OPNG. WIDTH	BEARING EA. END
4–INCH	L4x3 1/2x5/16 LLV	6'–4"	6"
4–INCH	L6x3 1/2x3/8 LLV	10'–0"	10"

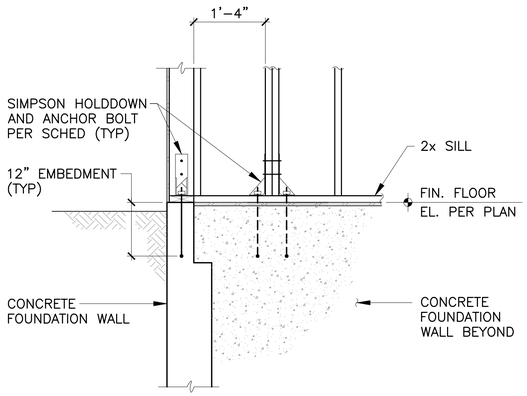

6 DETAIL at HOLDOWNS

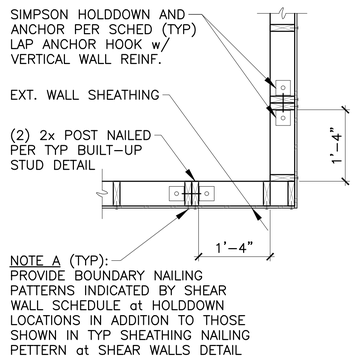

5 PLAN VIEW at HOLDOWNS

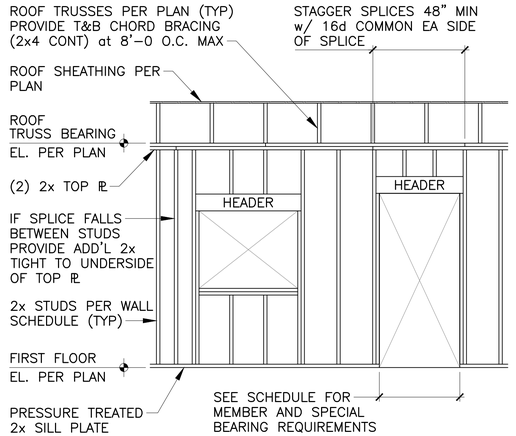

4 TYPICAL LOAD BEARING WALL

CJS ARCHITECTS
BUFFALO | ROCHESTER
www.cjsarchitects.com

ARCHITECT
CJS ARCHITECTS
755 SENECA STREET, BUFFALO, NY 14210
(716)716.856.6448)

CIVIL,STRUCTURAL ENGINEER
TREDO ENGINEERS
755 SENECA STREET
BUFFALO, NY 14210
(716)716.876.7147)

COPYRIGHT©2026 TREDO ENGINEERS
ALL RIGHTS RESERVED. NO PART OF THIS DRAWING MAY BE REPRODUCED OR COPIED IN ANY FORM BY ANY MEANS WITHOUT THE WRITTEN PERMISSION OF THE ENGINEERS.

REPRODUCTION OF THIS DRAWING FOR USE IN CONSTRUCTION OF SHOP AND/OR FIELD DETAIL DRAWINGS IS EXPRESSLY FORBIDDEN.

UNAUTHORIZED ALTERATION AND/OR DUPLICATION OF THIS DRAWING IS A VIOLATION OF SECTION 7209, PROVISION 2, OF THE NEW YORK STATE EDUCATION LAW.

MEP,FP ENGINEER
BUFFALO ENGINEERING, P.C.
4245UNION ROAD, SUITE 204 BUFFALO, NY 14425
(716.633.5300)

100% CD

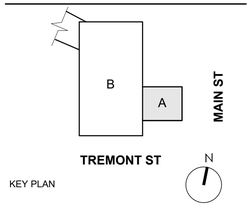

KEY PLAN

RIVIERA THEATRE

RIVIERA THEATRE GREEN ROOM

67 WEBSTER ST.
NORTH TONAWANDA, NY
14120

REV. #	DESCRIPTION	DATE

JOB NO.	2234 (T.E. JOB #25-92)
SCALE	N.T.S.
ISSUE DATE	10.21.2026
DRAWN BY	CAS
CHECKED BY	MJE

THIS IS A SINGLE SHEET OF A COHESIVE SET OF CONSTRUCTION DOCUMENTS (INCLUDING DRAWINGS AND SPECIFICATIONS). INTERPRETATION OF THE INFORMATION AS PRESENTED SHOULD BE BASED ON THE ENTIRE SET OF DOCUMENTS.

DRAWING TITLE

TYPICAL DETAILS

S-203

CONSTRUCTION DOCUMENTS

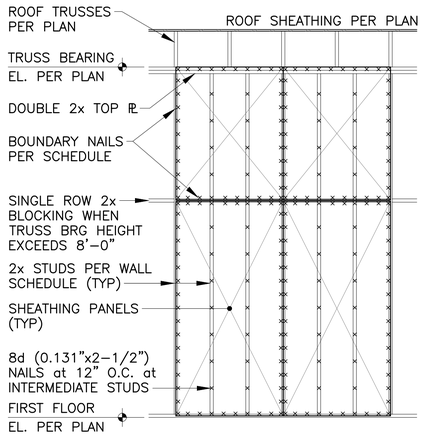

TYP. SHEATHING NAILING PATTERN at SHEAR WALLS

2

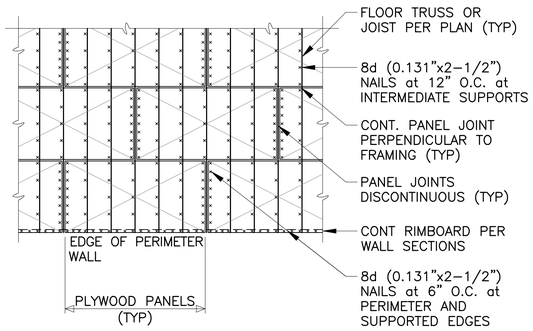

TYP. PLYWOOD NAILING at FLOOR DIAPHRAGM

3

SHEARWALL AND FASTENING SCHEDULE

SPECIFICATIONS		7/16" APA RATED SHEATHING							
FASTENING PATTERN OF WALL ABOVE		SINGLE SHEATHED				DOUBLE SHEATHED			
		8d at 6" O.C.		8d at 4" O.C.		8d at 6" O.C.		8d at 4" O.C.	
DETAIL OPTION		A	B	A	B	A	B	A	B
LOAD BEARING WALLS	MINIMUM RIM BOARD THICKNESS	1 1/4" LSL	1 1/4" LSL	1 1/2" LSL	1 1/4" LSL	1 1/2" LSL	1 1/4" LSL	1 1/2" LSL	(2) 1 1/4" LSL
	PLATE NAIL – 16D (0.162" x 3 1/2")	5" O.C.	–	(2) ROWS STAGGERED at 7" O.C.	–	(2) ROWS STAGGERED at 5" O.C.	–	(2) ROWS STAGGERED at 3 1/2" O.C.	–
	PLATE SCEW–SIMPSON SDWS22500DB TIMBER SCREW	–	15" O.C.	–	10" O.C.	–	8" O.C.	–	(2) ROWS STAGGERED at 10" O.C.
	FLOOR–TO–FLOOR SCREW (SIMPSON SDWF27XX–TUW)	32" O.C.		20" O.C.		16" O.C.		10" O.C.	
	RIM BOARD TO FLOOR FRAMING–10D(0.131"X3")	ONE EACH INTO TOP AND BOTTOM CHORDS							
	TOE NAIL RIM TO TOP PLATE –10D (0.131" x 3")	6" O.C.							
	FRAMING TO TOP PLATE –8D (0.131" x 2")	TWO NAILS DRIVEN AT AN ANGLE INTO BOTTOM CHORD, ONE EACH SIDE AT LEAST 1–1/2" FROM END							
	RIM TO TOP PLATE SHEAR CLIPS	SIMPSON A35 at 10" O.C.		SIMPSON A35 at 8" O.C.		SIMPSON HGA10KT at 10" O.C.		SIMPSON HGA10KT at 8" O.C.	
NON–LOAD BEARING WALLS	PLATE NAIL – 16d (0.162" x 3 1/2")	5" O.C.	–	(2) ROWS STAGGERED at 7" O.C.	–	(2) ROWS STAGGERED at 5" O.C.	–	(2) ROWS STAGGERED at 3 1/2" O.C.	–
	PLATE SCREW–SIMPSON SDWS22500DB TIMBER SCREW	10" O.C.	8" O.C.	6" O.C.	5" O.C.	(2) ROWS STAGGERED at 10" O.C.	(2) ROWS STAGGERED at 8" O.C.	(2) ROWS STAGGERED at 6" O.C.	(2) ROWS STAGGERED at 5" O.C.
SOLE PLATE SHEAR FASTENING SCHEDULE	5/8" DIAM A36 WITH 3" HOOK AND 7" MIN EMBED AND SIMPSON BPS 5/8–6 at	48.0		32.0		24.0		16.0	

NOTES: 1. THE FLOOR–TO–FLOOR SCREW LENGTH 'XX' SHALL BE NOT LESS THAN THE FLOOR TRUSS DEPTH PLUS 5 1/4 INCHES.
2. RIM BOARD SHALL BE 1.3E TIMBERSTRAND LSL OR EQUIVALENT
3. NAILS AND SCREWS SHALL BE SPACED AT LEAST 0.41" AND 0.55", RESPECTIVELY, FROM FACE OF RIM BOARD AND FROM STAGGERED FASTENING

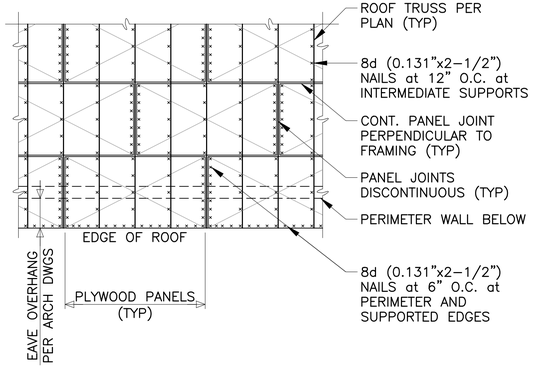

TYP. PLYWOOD NAILING at ROOF DIAPHRAGM

4

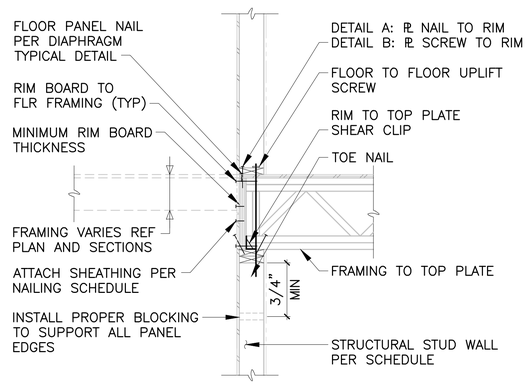

SHEARWALL FLOOR TO FLOOR FASTENING DETAIL: LOAD BEARING WALL

1C

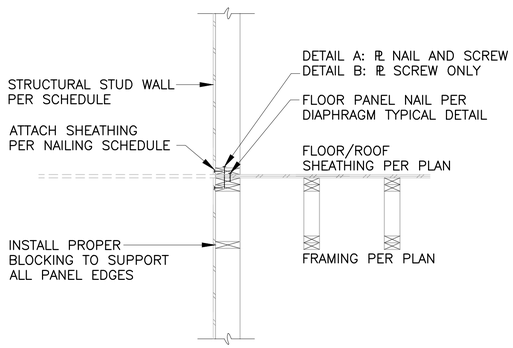

SHEARWALL FLOOR TO FLOOR FASTENING DETAIL: NON–LOAD BEARING WALL

1B

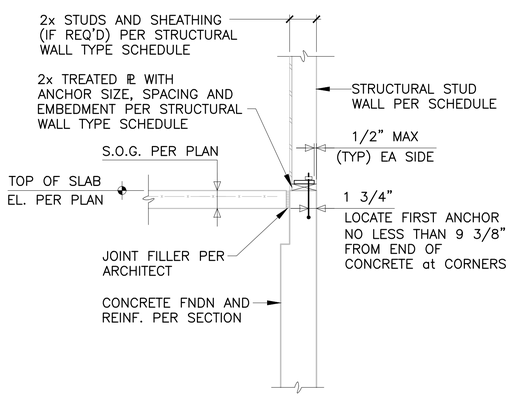

SHEARWALL SOLE PLATE FASTENING DETAIL

1A

CJS ARCHITECTS
BUFFALO | ROCHESTER
www.cjsarchitects.com

ARCHITECT
CJS ARCHITECTS
755 SENECA STREET, BUFFALO, NY 14210
(716)716.856.6448)

CIVIL,STRUCTURAL ENGINEER
TREDO ENGINEERS
755 SENECA STREET
BUFFALO, NY 14210
(716)716.876.7147)

MEP,FP ENGINEER
BUFFALO ENGINEERING, P.C.
4245UNION ROAD, SUITE 204 BUFFALO, NY 14425
(716.633.5300)

COPYRIGHT©2026 TREDO ENGINEERS
ALL RIGHTS RESERVED. NO PART OF THIS DRAWING MAY BE REPRODUCED OR COPIED IN ANY FORM BY ANY MEANS WITHOUT THE WRITTEN PERMISSION OF THE ENGINEERS.

REPRODUCTION OF THIS DRAWING FOR CONSTRUCTION OR ALTERATION OF SHOP AND/OR FIELD DETAIL DRAWINGS IS EXPRESSLY FORBIDDEN.

UNAUTHORIZED ALTERATION AND/OR DUPLICATION OF THIS DRAWING IS A VIOLATION OF SECTION 7209, PROVISION 2, OF THE NEW YORK STATE EDUCATION LAW.

100% CD

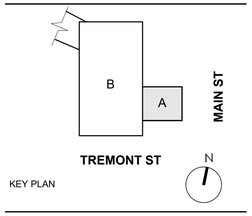

KEY PLAN

RIVIERA THEATRE

RIVIERA THEATRE GREEN ROOM

67 WEBSTER ST.
NORTH TONAWANDA, NY
14120

REV. #	DESCRIPTION	DATE

JOB NO.	2234 (T.E. JOB #25-92)
SCALE	N.T.S.
ISSUE DATE	10.21.2026
DRAWN BY	CAS
CHECKED BY	MJE

THIS IS A SINGLE SHEET OF A COHESIVE SET OF CONSTRUCTION DOCUMENTS (INCLUDING DRAWINGS AND SPECIFICATIONS). INTERPRETATION OF THE INFORMATION AS PRESENTED SHOULD BE BASED ON THE ENTIRE SET OF DOCUMENTS.

DRAWING TITLE

TYPICAL DETAILS

S-204

CONSTRUCTION DOCUMENTS

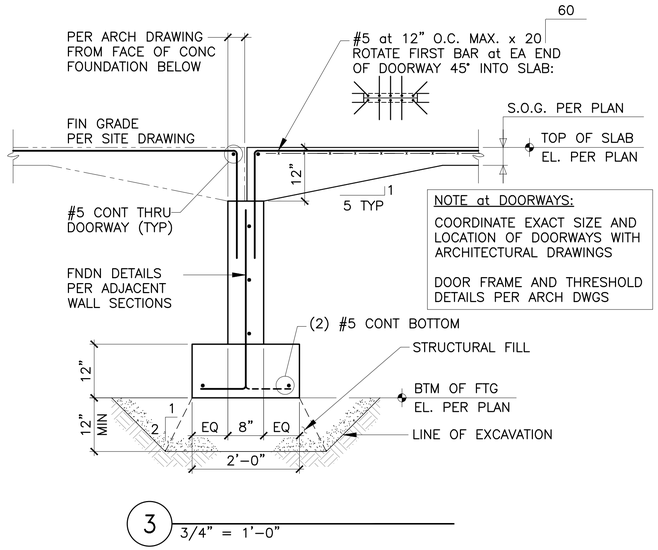

3 3/4" = 1'-0"

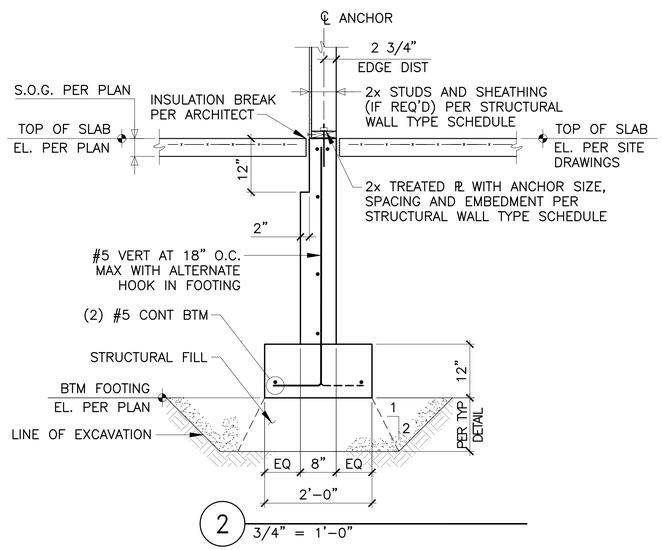

2 3/4" = 1'-0"

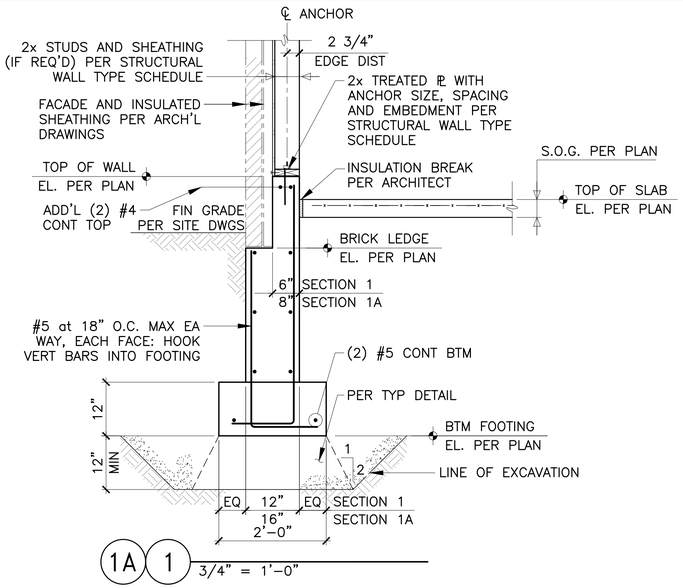

1A 1 3/4" = 1'-0"

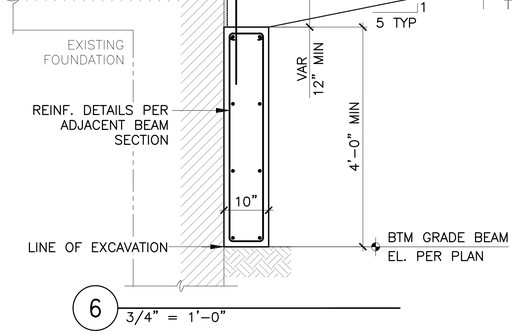

6 3/4" = 1'-0"

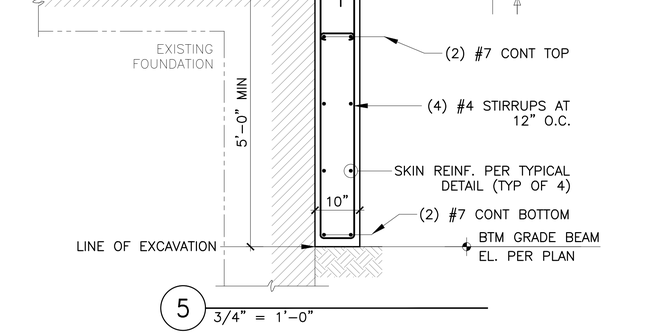

5 3/4" = 1'-0"

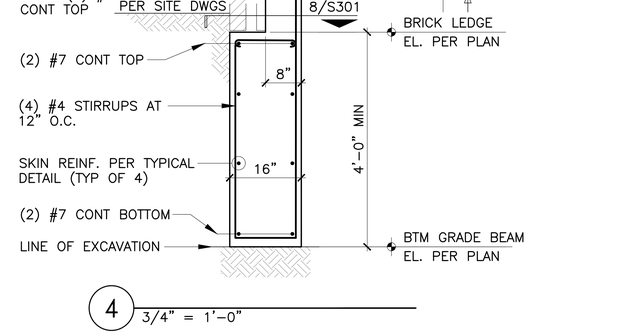

4 3/4" = 1'-0"

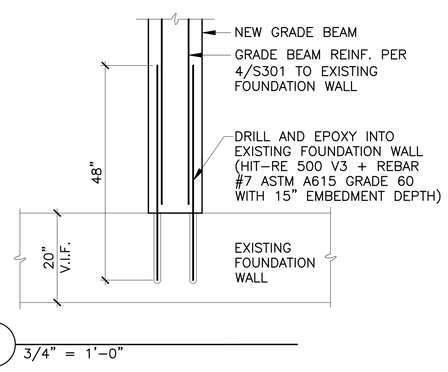

8 3/4" = 1'-0"

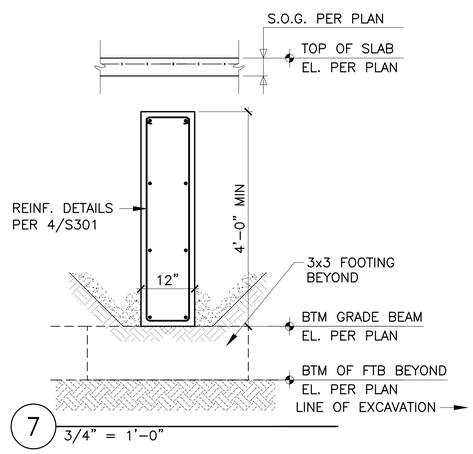

7 3/4" = 1'-0"

CJS ARCHITECTS
BUFFALO | ROCHESTER
www.cjsarchitects.com

ARCHITECT
CJS ARCHITECTS
755 SENECA STREET, BUFFALO, NY 14210
(716)716.856.6448)

CIVIL,STRUCTURAL ENGINEER
TREDO ENGINEERS
755 SENECA STREET
BUFFALO, NY 14210
(716)716.876.7147)

MEP,FP ENGINEER
BUFFALO ENGINEERING, P.C.
4245UNION ROAD, SUITE 204 BUFFALO, NY 14425
(716.633.5300)

COPYRIGHT©2026 TREDO ENGINEERS
ALL RIGHTS RESERVED. NO PART OF THIS DRAWING MAY BE REPRODUCED OR COPIED IN ANY FORM BY ANY MEANS WITHOUT THE WRITTEN PERMISSION OF THE ENGINEERS.

REPRODUCTION OF THIS DRAWING FOR USE IN CONSTRUCTION OF SHOP AND/OR FIELD DETAIL DRAWINGS IS EXPRESSLY FORBIDDEN.

UNAUTHORIZED ALTERATION AND/OR DUPLICATION OF THIS DRAWING IS A VIOLATION OF SECTION 7209, PROVISION 2, OF THE NEW YORK STATE EDUCATION LAW.

100% CD

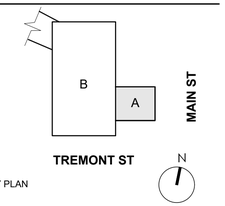

RIVIERA THEATRE

RIVIERA THEATRE GREEN ROOM

67 WEBSTER ST.
NORTH TONAWANDA, NY
14120

REV. #	DESCRIPTION	DATE

JOB NO.	2234 (T.E. JOB #25-92)
SCALE	AS NOTED
ISSUE DATE	10.21.2026
DRAWN BY	CAS
CHECKED BY	MJE

THIS IS A SINGLE SHEET OF A COHESIVE SET OF CONSTRUCTION DOCUMENTS (INCLUDING DRAWINGS AND SPECIFICATIONS). INTERPRETATION OF THE INFORMATION AS PRESENTED SHOULD BE BASED ON THE ENTIRE SET OF DOCUMENTS.

DRAWING TITLE

SECTIONS and DETAILS

S-301

CONSTRUCTION DOCUMENTS

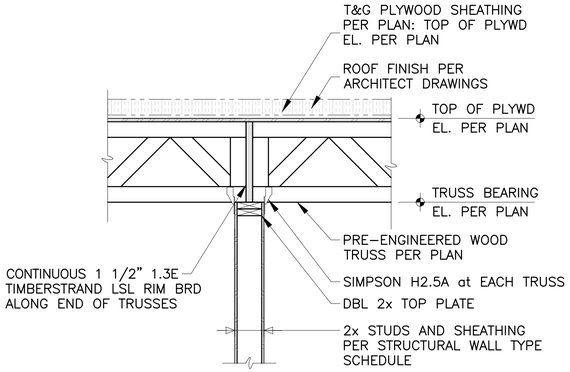

3 3/4" = 1'–0"

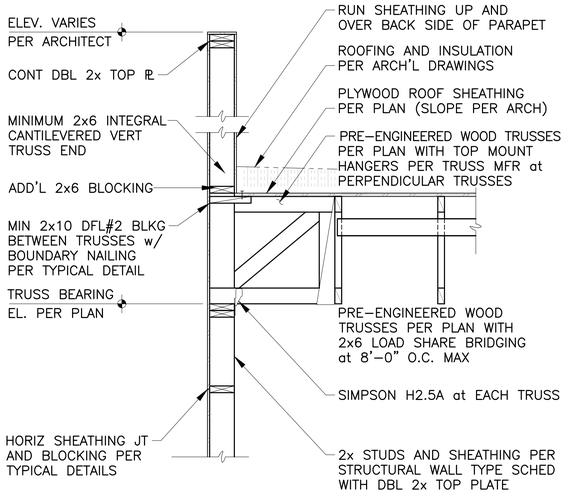

2 3/4" = 1'–0"

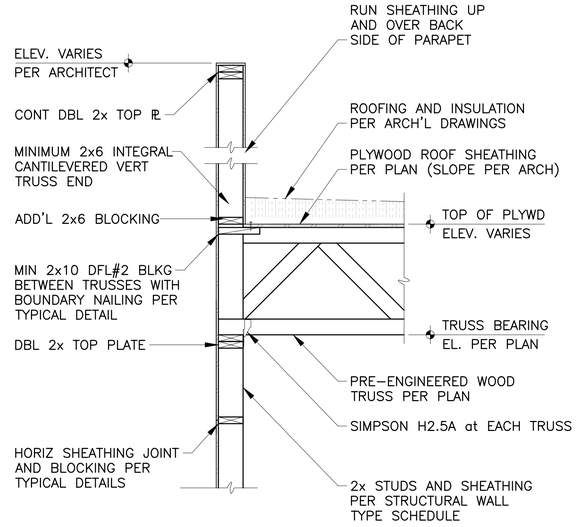

1 3/4" = 1'–0"

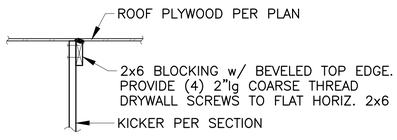

6A DETAIL
3/4" = 1'–0"

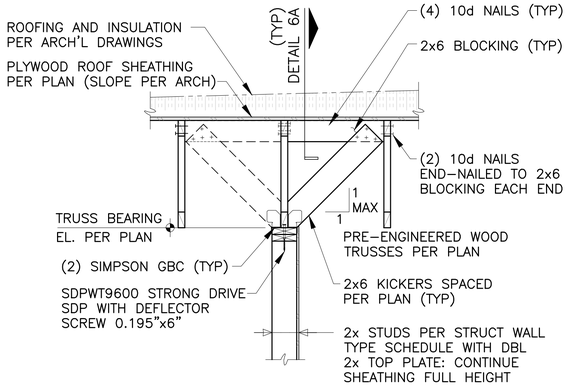

6 3/4" = 1'–0"

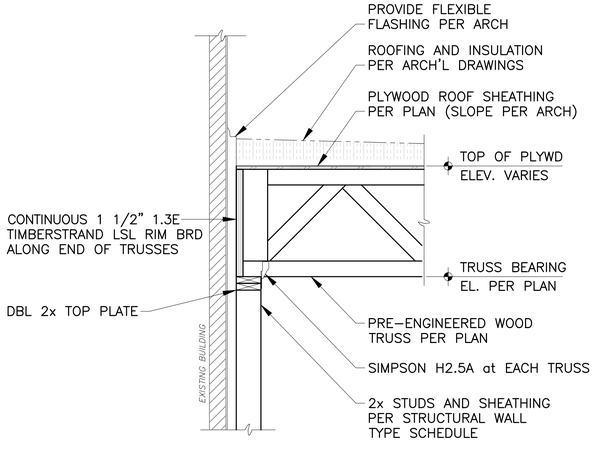

5 3/4" = 1'–0"

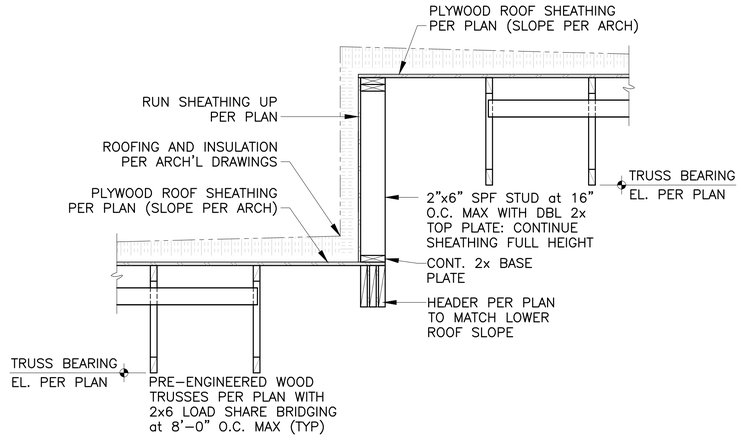

4 3/4" = 1'–0"

CJS ARCHITECTS
BUFFALO | ROCHESTER
www.cjsarchitects.com

ARCHITECT
CJS ARCHITECTS
755 SENECA STREET, BUFFALO, NY 14210
(716)716.856.6448)

CIVIL,STRUCTURAL ENGINEER
TREDO ENGINEERS
755 SENECA STREET
BUFFALO, NY 14210
(716)716.876.7147)

MEP,FP ENGINEER
BUFFALO ENGINEERING, P.C.
4245UNION ROAD, SUITE 204 BUFFALO, NY 14425
(716.633.5300)

COPYRIGHT©2026 TREDO ENGINEERS
ALL RIGHTS RESERVED. NO PART OF THIS DRAWING MAY BE REPRODUCED OR COPIED IN ANY FORM BY ANY MEANS WITHOUT THE WRITTEN PERMISSION OF THE ENGINEERS.

REPRODUCTION OF THIS DRAWING FOR CONSTRUCTION OR FABRICATION OF SHOP AND/OR FIELD DETAIL DRAWINGS IS EXPRESSLY FORBIDDEN.

UNAUTHORIZED ALTERATION AND/OR DUPLICATION OF THIS DRAWING IS A VIOLATION OF SECTION 7209, PROVISION 2, OF THE NEW YORK STATE EDUCATION LAW.

100% CD

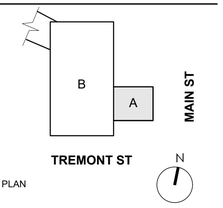

KEY PLAN

RIVIERA THEATRE

RIVIERA THEATRE GREEN ROOM

67 WEBSTER ST.
NORTH TONAWANDA, NY
14120

REV. #	DESCRIPTION	DATE

JOB NO.	2234 (T.E. JOB #25-92)
SCALE	AS NOTED
ISSUE DATE	10.21.2026
DRAWN BY	CAS
CHECKED BY	MJE

THIS IS A SINGLE SHEET OF A COHESIVE SET OF CONSTRUCTION DOCUMENTS (INCLUDING DRAWINGS AND SPECIFICATIONS). INTERPRETATION OF THE INFORMATION AS PRESENTED SHOULD BE BASED ON THE ENTIRE SET OF DOCUMENTS.

DRAWING TITLE

SECTIONS and DETAILS

S-302

CONSTRUCTION DOCUMENTS

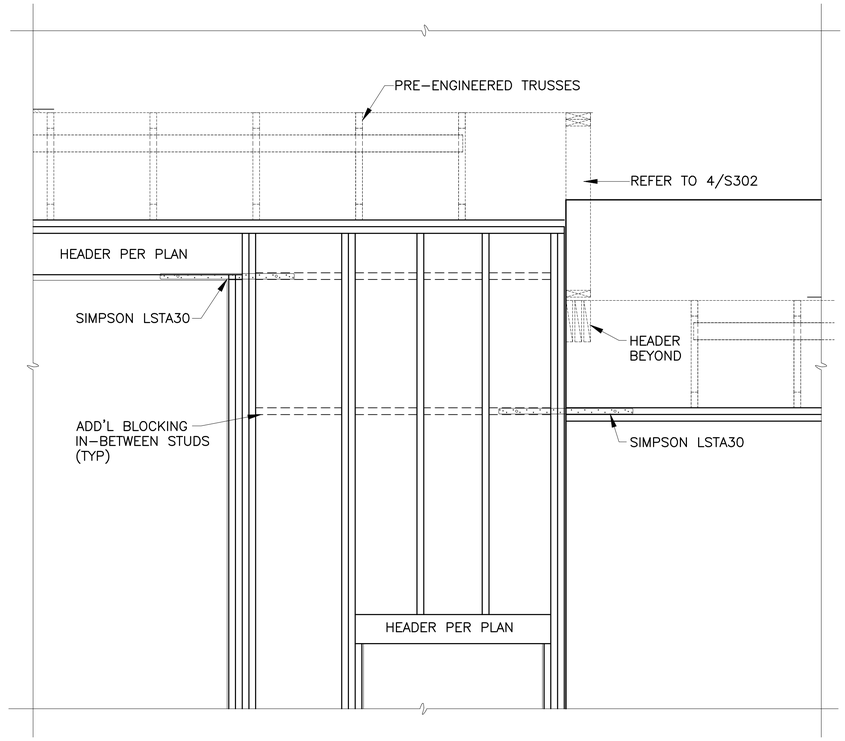

1 3/4" = 1'–0"

CJS ARCHITECTS

BUFFALO | ROCHESTER
www.cjsarchitects.com

ARCHITECT
CJS ARCHITECTS
755 SENECA STREET, BUFFALO, NY 14210
(716)716.856.6448)

CIVIL.STRUCTURAL ENGINEER
TREDO ENGINEERS
755 SENECA STREET
BUFFALO, NY 14210
(716)716.876.7147)

MEP.FP ENGINEER
BUFFALO ENGINEERING, P.C.
4245UNION ROAD, SUITE 204 BUFFALO, NY 14425
(716.633.5300)

COPYRIGHT©2026 TREDO ENGINEERS
ALL RIGHTS RESERVED. NO PART OF THIS DRAWING MAY BE REPRODUCED OR COPIED IN ANY FORM BY ANY MEANS WITHOUT THE WRITTEN PERMISSION OF THE ENGINEERS.

REPRODUCTION OF THIS DRAWING FOR SHOP DRAWING PREPARATION OF SHOP AND/OR FIELD DETAIL DRAWINGS IS EXPRESSLY FORBIDDEN.

UNAUTHORIZED ALTERATION AND/OR DUPLICATION OF THIS DRAWING IS A VIOLATION OF SECTION 7209, PROVISION 2, OF THE NEW YORK STATE EDUCATION LAW.

100% CD

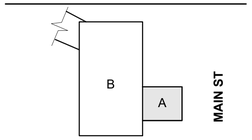

KEY PLAN

RIVIERA THEATRE

RIVIERA THEATRE GREEN ROOM

67 WEBSTER ST.
NORTH TONAWANDA, NY
14120

REV. #	DESCRIPTION	DATE

JOB NO.	2234 (T.E. JOB #25-92)
SCALE	AS NOTED
ISSUE DATE	10.21.2026
DRAWN BY	CAS
CHECKED BY	MJE

THIS IS A SINGLE SHEET OF A COHESIVE SET OF CONSTRUCTION DOCUMENTS (INCLUDING DRAWINGS AND SPECIFICATIONS). INTERPRETATION OF THE INFORMATION AS PRESENTED SHOULD BE BASED ON THE ENTIRE SET OF DOCUMENTS.

DRAWING TITLE

SECTIONS and DETAILS

S-303

CONSTRUCTION DOCUMENTS

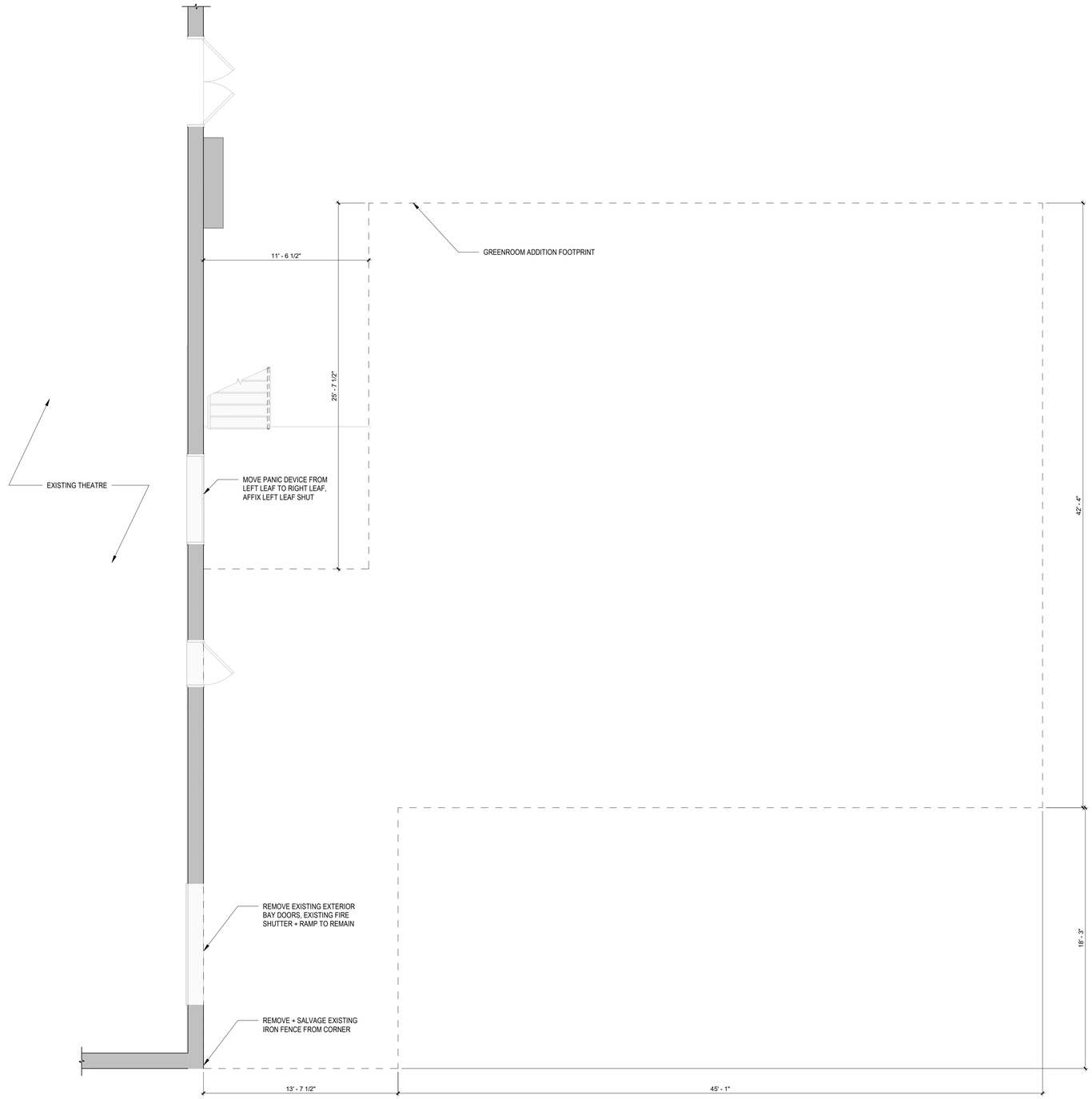

1 D-101 DEMO PLAN
1/4" = 1'-0"

GENERAL DEMOLITION NOTES

1. REFERENCE A001 FOR GENERAL NOTES.
2. REFER TO MEP DWG'S FOR ADDITIONAL DEMOLITION SCOPE. COORDINATE DEMOLITION WORK REQUIRED FOR NEW PENETRATIONS REQUIRED BY NEW UTILITY WORK.
3. REFER TO THE ELECTRICAL DRAWINGS FOR ALL LIGHTING SCOPE OF WORK DEMOLITION REQUIREMENTS AND RETROFITTING OF EXISTING TO REMAIN FIXTURES WHERE APPLICABLE.
4. IN SOME SPACES SELECTIVE DEMOLITION OF PORTIONS OF EXISTING TO REMAIN CEILING GRIDS MAY BE REQUIRED, BUT WHICH DO NOT NECESSITATE THE DEMOLITION OF THE SPACES ENTIRE GRID. COORDINATE LOCATIONS OF SELECTIVE DEMOLITION WITH MEP DRAWINGS.
5. THE CONTRACT DOCUMENTS ARE COMPLIMENTARY TO EACH OTHER. WHAT IS REQUIRED FOR ONE DRAWING SHALL BE AS BINDING AS IF REQUIRED FOR ALL.
6. DEMOLITION IS NOT NECESSARILY LIMITED TO WHAT IS SHOWN ON DRAWINGS. THE INTENT IS TO INDICATE THE GENERAL SCOPE OF DEMOLITION REQUIRED TO COMPLETE THE WORK IN ACCORDANCE WITH THE CONTRACT DRAWINGS.
7. THE CONTRACTOR SHALL VERIFY ALL CONDITIONS AND DIMENSIONS IN FIELD AND BRING ANY DISCREPANCIES TO THE ATTENTION OF THE ARCHITECT AND OWNER, PRIOR TO THE BID.
8. THE CONTRACTOR SHALL NOT ENCUMBER AREAS OUTSIDE OF CONTRACT LIMIT LINES WITH DEBRIS OR MATERIALS.
9. THE CONTRACTOR SHALL MAINTAIN THE AREA IN A SAFE MANNER TO ENSURE THE SAFETY OF STAFF AND CONSTRUCTION PERSONNEL AND NOT ALLOW INTERRUPTION OF TRAFFIC FLOW.
10. THE CONTRACTOR SHALL NOT ALLOW DEBRIS TO ACCUMULATE. ALL DEBRIS SHALL BE REMOVED FROM THE AREA AT THE END OF EACH DAY. ALL COMBUSTIBLE MATERIALS / DEBRIS SHALL BE IMMEDIATELY REMOVED FROM THE AREA. ALL DEBRIS REMOVAL SHALL BE PERFORMED IN ACCORDANCE WITH BUILDING OWNER REQUIREMENTS AND PROCEDURES.
11. THE CONTRACTOR SHALL REMOVE AND LEGALLY DISPOSE OF ALL DEBRIS.
12. ALL DEMOLITION DEBRIS SHALL BECOME THE PROPERTY OF THE CONTRACTOR UNLESS SPECIFICALLY NOTED TO BE SALVAGED, WHEREIN IT REMAINS THE PROPERTY OF THE OWNER. THE OWNER RESERVES THE RIGHT TO REQUEST ITEMS BE SALVAGED DURING THE DURATION OF THE WORK OF THIS PROJECT. ALL DEMOLITION DEBRIS SHALL CONFORM TO THE CONSTRUCTION WASTE MANAGEMENT PLAN.
13. THE CONTRACTOR SHALL PROVIDE BARRIER PARTITION CONSTRUCTION TO CONTAIN DUST, MAINTAIN BUILDING SECURITY AND WEATHER TIGHTNESS. SEAL PARTITIONS AT FLOOR, ADJACENT WALLS AND TO DECK ABOVE. PROVIDE NECESSARY EGRESS DOORS AND HARDWARE PER EGRESS REQUIREMENTS.
14. PROTECT COMMON AREA ELEVATORS AND TOILET ROOMS DURING DEMOLITION AND CONSTRUCTION PHASES.
15. THE CONTRACTOR SHALL COORDINATE WITH THE BUILDING OWNER / MANAGER & TENANT, AREAS TO BE USED FOR STAGING, MATERIAL DELIVERY, DEBRIS REMOVAL, ETC. PRIOR TO START OF DEMOLITION.
16. AT COMPLETION OF DEMOLITION WORK, THE CONSTRUCTION AREAS SHALL BE LEFT IN "BROOM CLEAN" CONDITION. ALL DEBRIS AND MISCELLANEOUS MATERIAL SHALL BE REMOVED.
17. COORDINATE ALL DEMOLITION WORK W/ ASBESTOS ABATEMENT DRAWINGS AND SPECIFICATIONS FOR ASBESTOS CONTAINING MATERIALS.
18. SHOULD HAZARDOUS MATERIALS BE ENCOUNTERED, THE CONTRACTOR SHALL STOP WORK, SEAL THE AREA, AND REPORT CONDITION TO THE OWNER AND THE ARCHITECT AND DO NO WORK UNTIL THE CONDITION IS CORRECTED. HAZARDOUS MATERIALS INCLUDE BUT ARE NOT LIMITED TO: MOLD, ASBESTOS, PIPE COVERING (INSULATION) , VINYL ASBESTOS TILE, AND LEAD BASE PAINT.
19. FOR ALL ITEMS CALLED OUT TO BE DEMOLISHED PROVIDE COMPLETE DEMOLITION SCOPE REMOVING ALL ASSOCIATED ATTACHMENTS AND ADHESIVES COMPLETE. PREPARE SURFACES TO RECEIVE NEW CONSTRUCTION.
20. REMOVE FLOOR FINISHES WHERE NOTED. CLEAN SLAB AS REQUIRED TO REMOVE ALL GLUE, GREASE, DIRT, AND ELEMENTS THAT WOULD PREVENT AN ACCEPTABLE SURFACE FOR THE FLOOR FINISHES.
21. REMOVE ALL EXISTING IRREGULAR MATERIALS WHICH CAUSE RISES OR DEPRESSIONS IN FLOORING SURFACE, SUCH AS FASTENERS, OUTLET CORES, COVER PLATES, RESILIENT FLOOR COVERINGS, CARPET, CARPET PAD, FLASH PATCH CONCRETE FILL, PLYWOOD, ETC..
22. PATCH AND/OR REPLACE ANY SURFACE THAT IS DAMAGED DURING THE DEMOLITION PHASE, OR DAMAGED WALLS AND COLUMNS THAT ARE TO REMAIN.
23. EXISTING COLUMN ENCLOSURES TO REMAIN, U.O.N.
24. COORDINATE ALL DEMOLITION WORK W/ HAZARDOUS MATERIAL DRAWINGS AND SPECIFICATIONS FOR ASBESTOS CONTAINING MATERIALS.
25. COORDINATE WITH DIVISION 1 FOR GENERAL CONSTRUCTION PROCEDURES.
26. REMOVE ANY SIGNAGE, ARTWORK, DISPLAY BOARDS AND OTHER NON-INTEGRAL ASSOCIATED WALL MOUNTED ELEMENTS AT WALLS AFFECTED BY THIS WORK. PROVIDE TEMPORARY CLEAN STORAGE. OWNER TO VERIFY RE-INSTALLATION LOCATIONS WHERE APPLICABLE.
27. COORDINATE SIZE AND LOCATION OF SLAB REMOVALS WITH NEW WORK.
28. COORDINATE REMOVAL WORK AT DOORS WITH HARDWARE SCHEDULE FOR EXTENT OF EXISTING HARDWARE TO BE DEMOLISHED/SALVAGED.
29. REMOVE ALL EXISTING BLINDS, ROLLER SHADES, WINDOW TREATMENTS AND THEIR ASSOCIATED ATTACHMENTS.
30. REMOVE ALL EXISTING CEILING TILES UNLESS OTHERWISE NOTED.

KEYNOTES - DEMOLITION

DEMO PLAN SYMBOLS

ALL SYMBOLS NOT NECESSARILY USED

EXISTING WALL TO REMAIN

EXISTING WALL TO BE REMOVED

EXISTING DOOR TO BE REMOVED

CJS ARCHITECTS
BUFFALO | ROCHESTER
www.cjsarchitects.com

ARCHITECT
CJS ARCHITECTS
755 SENECA STREET, BUFFALO, NY 14210
(716)716.856.6448

STRUCTURAL ENGINEER
TREDO ENGINEERS
755 SENECA STREET, BUFFALO, NY 14210
(716)716.876.7147

MEP.FP ENGINEER
BUFFALO ENGINEERING, P.C.
4245UNION ROAD, SUITE 204 BUFFALO, NY 14425
(716.633.5300)

CIVIL ENGINEER
TREDO ENGINEERS
755 SENECA STREET, BUFFALO, NY 14210
(716)716.876.7147

REGISTERED ARCHITECT
ANGELA E. STAMM
019747
STATE OF NEW YORK

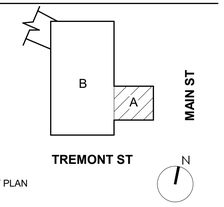

KEY PLAN

RIVIERA THEATRE AND ORGAN PRESERVATION SOCIETY

RIVIERA THEATRE GREEN ROOM

67 WEBSTER ST.
NORTH TONAWANDA, NY
14120

REV. #	DESCRIPTION	DATE

JOB NO.	2545
SCALE	As indicated
ISSUE DATE	10/21/2026
DRAWN BY	XXX
CHECKED BY	XXX

THIS IS A SINGLE SHEET OF A COHESIVE SET OF CONSTRUCTION DOCUMENTS (INCLUDING DRAWINGS AND SPECIFICATIONS). INTERPRETATION OF THE INFORMATION AS PRESENTED SHOULD BE BASED ON THE ENTIRE SET OF DOCUMENTS.

DRAWING TITLE

FIRST FLOOR DEMOLITION PLAN

D-101

100% CONSTRUCTION DOCUMENTS

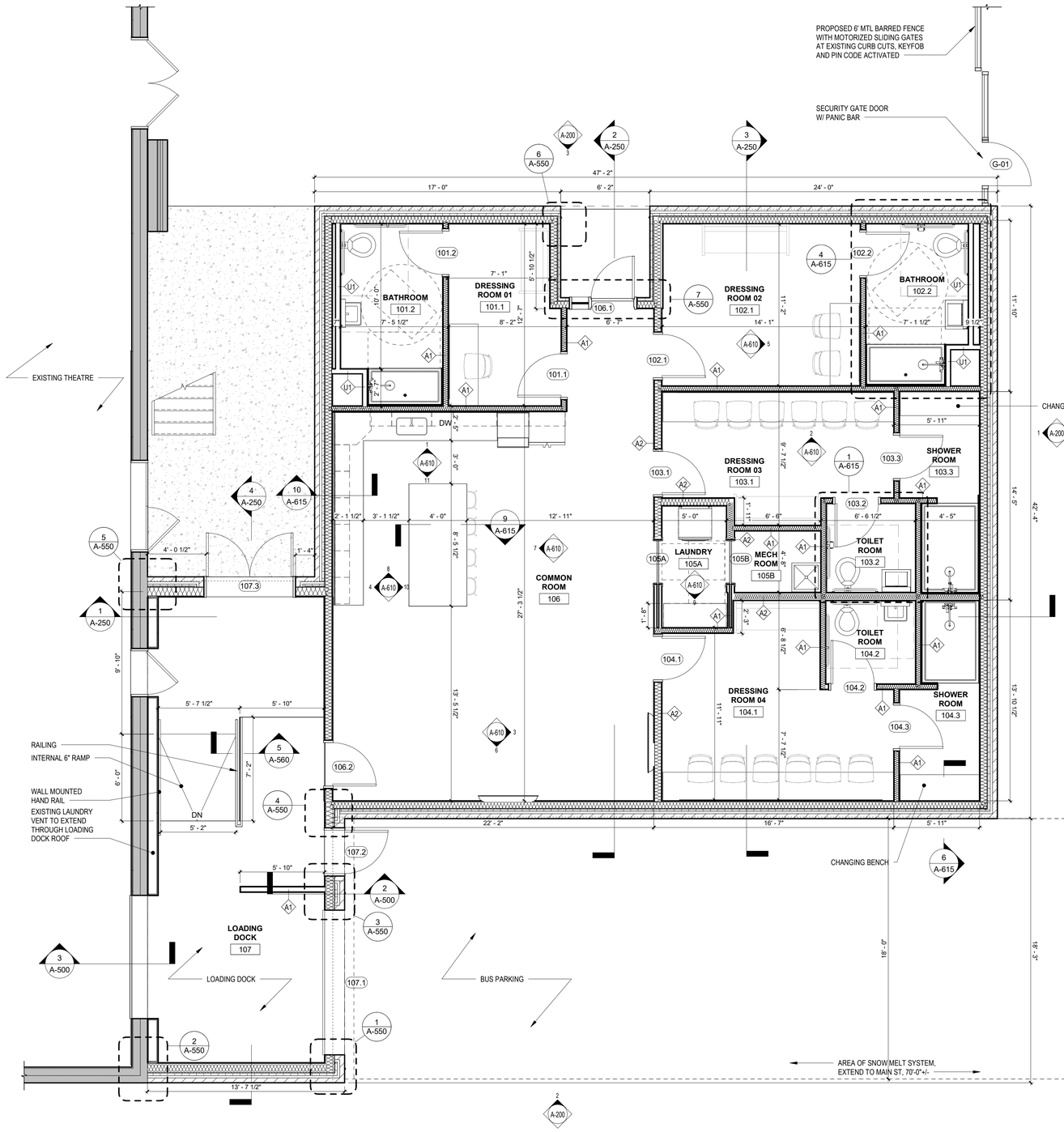

4 FIRST FLOOR PLAN
A-101 1/4" = 1'-0"

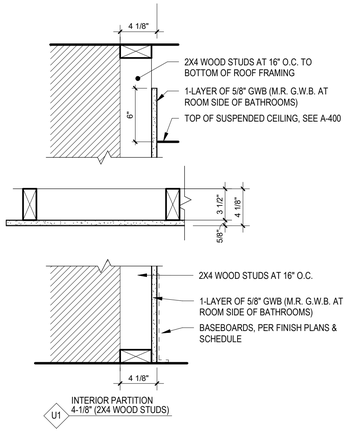

3 PARTITION_U1_4-1/8"_NR
A-101 1 1/2" = 1'-0"

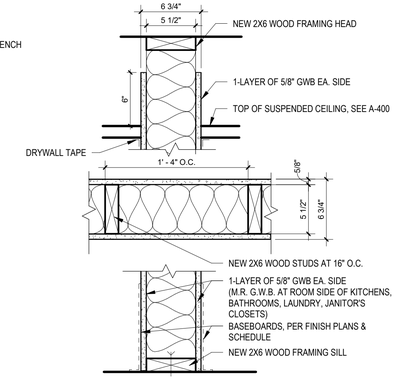

2 PARTITION_A2_5-1/2"
A-101 1 1/2" = 1'-0"

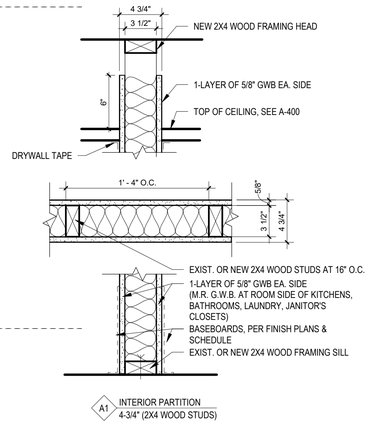

1 PARTITION_A1_4-3/4
A-101 1 1/2" = 1'-0"

GENERAL PLAN NOTES

1. REFERENCE SHEET A-001 MATERIAL LEGEND, SYMBOL LEGEND AND ABBREVIATIONS USED.
2. REFERENCE LS-101 FOR LIFE SAFETY DRAWINGS.
3. REFERENCE A-400 REFLECTED CEILING PLAN
4. REFERENCE A-600 FOR ROOM FINISH PLAN, FINISH SCHEDULE AND FLOOR PATTERN PLANS.
5. REFERENCE A-800 FOR PARTITION TYPES.
6. REFERENCE A-801 FOR DOOR SCHEDULE.
7. REFERENCE STRUCTURAL DRAWINGS FOR UNIT MASONRY, STEEL, CONCRETE ETC. INFORMATION.
8. ALL STRUCTURE., MECH., ELEC., PLUMB. AND FIRE PROTECTION ELEMENTS SHOWN ARE FOR REFERENCE ONLY. CONTRACTOR SHALL REFER TO OTHER SECTIONS OF THE DOCUMENTS AS APPROPRIATE FOR OTHER TRADES. WHERE DISCREPANCIES EXIST BETWEEN ARCH. DRAWINGS AND OTHER TRADES CONTRACTOR SHALL NOTIFY GC OR CM & ARCHITECT PRIOR TO PERFORMING ANY WORK RELATED TO SAID DISCREPANCY.
9. ALL KEY PLANS ARE FOR REFERENCE ONLY.
10. REFER TO U.L. FIRE RESISTANCE DIRECTORY FOR DETAILS ON FIRE RATED WALLS, COLUMNS ENCLOSURES, FLOOR/CEILING ASSEMBLIES & CEILING/ROOF ASSEMBLIES.
11. ALL SUB-CONTRACTORS SHALL VERIFY THAT CONDITIONS PRESENT MEET STANDARD INDUSTRY ACCEPTED CRITERIA FOR ACCEPTING/PERFORMING WORK OF THEIR TRADE. IF CONDITIONS PRESENT WILL NOT FACILITATE PERFORMANCE OF THEIR WORK IN AN ACCEPTABLE FASHION, SAID CONTRACTOR SHALL BRING THE DEFICIENCIES TO THE ATTENTION OF THE CM OR GC. IF WORK PROCEEDS WITHOUT CORRECTING DEFICIENT EXISTING CONDITIONS, ANY COSTS ASSOCIATED WITH REMOVAL & REINSTALLATION OF SAID WORK WILL BE THE RESPONSIBILITY OF THE SUB-CONTRACTOR.
12. BATH ROUGH OPENINGS SHALL NOT INTERRUPT UL DESIGN OF FIRE RATED FLOOR, WALL, AND CEILING ASSEMBLIES.
13. INTERIOR DIMENSIONS ARE TO FINISHED FACE OF WALL UNLESS NOTED OTHERWISE.
14. PROVIDE DRAFTSTOPPING AT THE TOP OF ALL CONCEALED WALL CAVITIES. DRAFTSTOPPING SHALL BE OF AN BONYS APPROVED MATERIAL AND SHALL PREVENT THE PASSAGE OF SMOKE FROM THE WALL CAVITY INTO ANY ADJACENT CEILING/FLOOR OR CEILING/ROOF CAVITIES.
15. PROVIDE FIRE RATED SOLID WOOD BLOCKING AS REINFORCING FOR ALL WALL HUNG ITEMS, INCLUDING BUT NOT LIMITED TO; HANDRAILS, GRAB BARS, FUTURE GRAB BARS, CABINETS, ELEC. PANELS, FIXTURES AND ACCESSORIES.
16. MOISTURE RESISTANT GYPSUM WALL BOARD SHALL BE PROVIDED AT ALL WET AREAS (TOILETS, KITCHENS, MOP SINKS, ETC.)
17. CORD., MECH COVERS, GRILLES, ETC. WITH MECH. DWG'S. COLORS TO BE SELECTED BY ARCHITECT FROM MANUFACTURER'S FULL RANGE, INCLUDING PREMIUM FINISHES/COLORS.
18. DOORS LOCATED IN CLOSETS OR PARTITIONS TO BE CENTERED WITHIN WALL UNLESS OTHERWISE NOTED.
19. CUSTOM PAINT ELECTRICAL PANEL BOXES IN RESIDENTIAL UNITS - MATCH ADJACENT WALL COLOR.
20. ALIGN FINISHED FACE OF WALLS WHERE DIFFERENT WALL TYPES ABUT EACH OTHER.
21. GENERAL FLOOR PLAN NOTES APPLY TO ALL FLOOR PLANS OF THIS PROJECT.
22. ALL DIMENSIONS, MATERIAL INDICATIONS AND NOTES SHOWN ON ONE DRAWING SHALL APPLY TO ALL OTHER SIMILAR DRAWINGS UNLESS OTHERWISE NOTED.
23. VERIFY ALL DIMENSIONED CONDITIONS IN THE FIELD PRIOR TO SHOP DRAWING SUBMITTAL/FABRICATION/CONSTRUCTION. WHEN DIMENSIONS AND/OR CONDITIONS AS INDICATED ON THE DRAWINGS CONFLICT WITH ACTUAL, CONTACT THE ARCHITECT IN WRITING FOR CLARIFICATION.
24. FOR THOSE EXISTING FINISHES DAMAGED OR EXPOSED DURING DEMOLITION, PATCH & REPAIR ALL EXISTING FINISHES TO REMAIN AND MATCH THEM TO EXISTING ADJACENT CONDITIONS . FINISH AND REPAIR SHALL RESTORE CONTINUITY OF EXISTING ADJACENT FINISH . PROVIDE NEW MATERIALS WHERE MISSING OR WHERE CONTINUITY OF FINISH CANNOT BE ACHIEVED BY REPAIR.
25. REPLACE SALVAGED SIGNAGE, ARTWORK, DISPLAY BOARDS AND OTHER ASSOCIATED WALL MOUNTED CLASSROOM EQUIPMENT REMOVED DURING DEMOLITION. LOCATIONS WHERE DIRECTED BY ARCHITECT.
26. FOR DRAWING CLARITY, NOT ALL SLAB INFILLS HAVE BEEN SHOWN. SLAB INFILLS CORRESPOND SLAB REMOVAL REGIONS IN THE DEMOLITION DRAWINGS . REF. STRUCTURAL DRAWINGS FOR NEW WORK REQUIREMENTS.

PLAN SYMBOLS

ALL SYMBOLS NOT NECESSARILY USED

- EXISTING WALL TO REMAIN
- NEW CONSTRUCTION - REFER TO WALL TYPES
- NEW DOOR - SEE DOOR SCHEDULE FOR ADDITIONAL INFORMATION

WALL TYPE NOTES

1. PROVIDE CONTINUOUS BEAD OF SEALANT AT TOP AND BOTTOM STUDS OF ALL PARTITION WALLS THAT SEPERATE A CORRIDOR, HALLWAY, MECHANICAL CLOSETS, COMMON SPACES, AND UTILITY SPACES FROM AN OCCUPIED SPACE. AT FIRE RATED PARTITIONS, PROVIDE FIRE RATED SEALANT.
2. SEAL ALL OPENINGS, GAPS PENETRATIONS, AND JOINTS IN PARTITION TYPES AS FOLLOWS:FIRE RATED PARTITIONS: SEAL IN ACCORDANCE WITH THE REQUIREMENTS SPECIFIED FOR THROUGH PENETRATION FIRESTOP SYSTEMS AND FIRE RESISTIVE JOINT SYSTEMS. SMOKE TIGHT PARTITIONS: SEAL COMPLETELY WITH ELASTOMERIC SEALANT, FOR LOCATION AND EXTEND OF PARTITIONS. DESIGNATED AS "SMOKE TIGHT" REFER TO CODE COMPLIANCE DRAWINGS AND OTHER LOCATIONS AS INDICATED AND REQUIRED ELSEWHERE BY THE CONTRACT DOCUMENTS.
3. FOR ALL JANITOR'S CLOSETS AND WALLS ADJACENT TO WET WALL LOCATIONS - PROVIDE 1 LAYER 5/8" MOISTURE RESISTANT G.W.B. ON WET SIDE OF WALL IN LIEU OF G.W.B. SHOWN ON PARTITION TYPE. THIS NOTE DOES NOT APPLY TO PARTION TYPES USING CEMENT BOARD.
4. FOR WALL SCHEDULED TO RECIEVE CERAMIC TILE WALL FINISH, REPLACE GYPSUM WALL BOARD BEHIND CERAMIC TILE WITH CEMENT BACKER BOARD UNITS.
5. SEE WALL SECTIONS FOR EXTERIOR WALL TYPES.
6. ALL INTERIOR PARTITION GYPSUM BOARD TO EXTEND TO UNDERSIDE OF FLOOR SLAB OR ROOF DECK ABOVE ON BOTH SIDES UNLESS OTHERWISE NOTED.

CJS ARCHITECTS
BUFFALO | ROCHESTER
www.cjsarchitects.com

ARCHITECT
CJS ARCHITECTS
755 SENECA STREET, BUFFALO, NY 14210
(716)716.856.6448)

STRUCTURAL ENGINEER
TREDO ENGINEERS
755 SENECA STREET, BUFFALO, NY 14210
(716)716.876.7147)

MEP.FP ENGINEER
BUFFALO ENGINEERING, P.C.
4245UNION ROAD, SUITE 204 BUFFALO, NY 14425
(716.633.5300)

CIVIL ENGINEER
TREDO ENGINEERS
755 SENECA STREET, BUFFALO, NY 14210
(716)716.876.7147)

REGISTERED ARCHITECT
GREGORY E. STAHLEY
091971
STATE OF NEW YORK

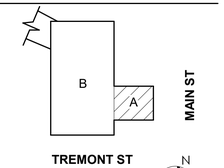

KEY PLAN

RIVIERA THEATRE AND ORGAN PRESERVATION SOCIETY

RIVIERA THEATRE GREEN ROOM

67 WEBSTER ST.
NORTH TONAWANDA, NY
14120

REV. #	DESCRIPTION	DATE

JOB NO.	2545
SCALE	As indicated
ISSUE DATE	10/21/2026
DRAWN BY	GAC
CHECKED BY	JMC

THIS IS A SINGLE SHEET OF A COHESIVE SET OF CONSTRUCTION DOCUMENTS (INCLUDING DRAWINGS AND SPECIFICATIONS). INTERPRETATION OF THE INFORMATION AS PRESENTED SHOULD BE BASED ON THE ENTIRE SET OF DOCUMENTS.

DRAWING TITLE

FIRST FLOOR PLAN

A-101

100% CONSTRUCTION DOCUMENTS

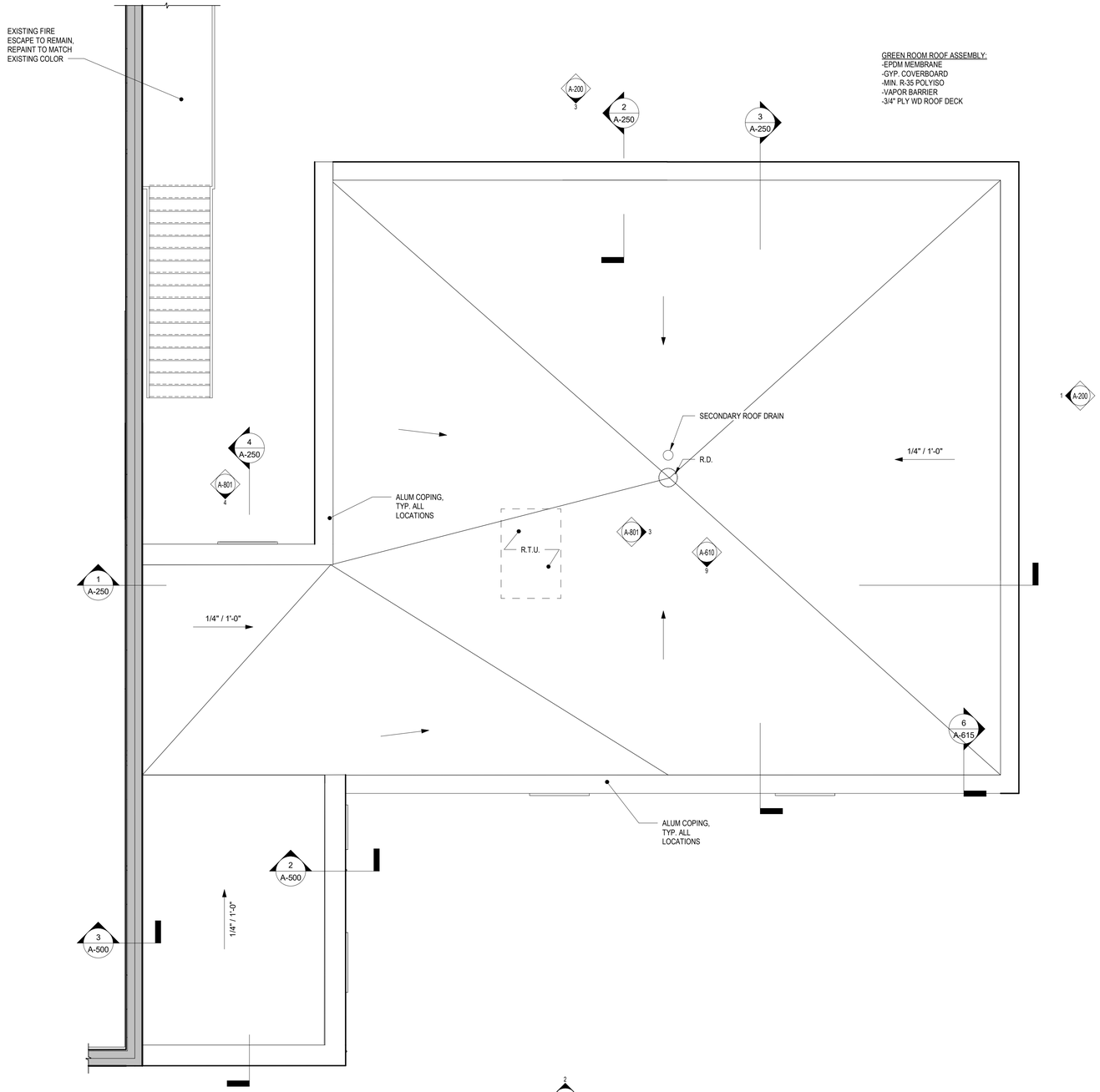

1 A-102 ROOF PLAN
1/4" = 1'-0"

GENERAL PLAN NOTES

1. REFERENCE SHEET A-001 MATERIAL LEGEND, SYMBOL LEGEND AND ABBREVIATIONS USED.
2. REFERENCE LS-101 FOR LIFE SAFETY DRAWINGS.
3. REFERENCE A-400 REFLECTED CEILING PLAN
4. REFERENCE A-600 FOR ROOM FINISH PLAN, FINISH SCHEDULE AND FLOOR PATTERN PLANS.
5. REFERENCE A-800 FOR PARTITION TYPES.
6. REFERENCE A-801 FOR DOOR SCHEDULE.
7. REFERENCE STRUCTURAL DRAWINGS FOR UNIT MASONRY, STEEL, CONCRETE ETC. INFORMATION.
8. ALL STRUCTURE., MECH., ELEC., PLUMB. AND FIRE PROTECTION ELEMENTS SHOWN ARE FOR REFERENCE ONLY. CONTRACTOR SHALL REFER TO OTHER SECTIONS OF THE DOCUMENTS AS APPROPRIATE FOR OTHER TRADES. WHERE DISCREPANCIES EXIST BETWEEN ARCH. DRAWINGS AND OTHER TRADES CONTRACTOR SHALL NOTIFY GC OR CM & ARCHITECT PRIOR TO PERFORMING ANY WORK RELATED TO SAID DISCREPANCY.
9. ALL KEY PLANS ARE FOR REFERENCE ONLY.
10. REFER TO U.L. FIRE RESISTANCE DIRECTORY FOR DETAILS ON FIRE RATED WALLS, COLUMNS ENCLOSURES, FLOOR/CEILING ASSEMBLIES & CEILING/ROOF ASSEMBLIES.
11. ALL SUB-CONTRACTORS SHALL VERIFY THAT CONDITIONS PRESENT MEET STANDARD INDUSTRY ACCEPTED CRITERIA FOR ACCEPTING/PERFORMING WORK OF THEIR TRADE. IF CONDITIONS PRESENT WILL NOT FACILITATE PERFORMANCE OF THEIR WORK IN AN ACCEPTABLE FASHION, SAID CONTRACTOR SHALL BRING THE DEFICIENCIES TO THE ATTENTION OF THE CM OR GC. IF WORK PROCEEDS WITHOUT CORRECTING DEFICIENT EXISTING CONDITIONS, ANY COSTS ASSOCIATED WITH REMOVAL & REINSTALLATION OF SAID WORK WILL BE THE RESPONSIBILITY OF THE SUB-CONTRACTOR.
12. BATH ROUGH OPENINGS SHALL NOT INTERRUPT UL DESIGN OF FIRE RATED FLOOR, WALL, AND CEILING ASSEMBLIES.
13. INTERIOR DIMENSIONS ARE TO FINISHED FACE OF WALL UNLESS NOTED OTHERWISE.
14. PROVIDE DRAFTSTOPPING AT THE TOP OF ALL CONCEALED WALL CAVITIES. DRAFTSTOPPING SHALL BE OF AN BONYS APPROVED MATERIAL AND SHALL PREVENT THE PASSAGE OF SMOKE FROM THE WALL CAVITY INTO ANY ADJACENT CEILING/FLOOR OR CEILING/ROOF CAVITIES.
15. PROVIDE FIRE RATED SOLID WOOD BLOCKING AS REINFORCING FOR ALL WALL HUNG ITEMS, INCLUDING BUT NOT LIMITED TO; HANDRAILS, GRAB BARS, FUTURE GRAB BARS, CABINETS, ELEC. PANELS, FIXTURES AND ACCESSORIES.
16. MOISTURE RESISTANT GYPSUM WALL BOARD SHALL BE PROVIDED AT ALL WET AREAS (TOILETS, KITCHENS, MOP SINKS, ETC.)
17. CORD., MECH COVERS, GRILLES, ETC. WITH MECH. DWG'S. COLORS TO BE SELECTED BY ARCHITECT FROM MANUFACTURER'S FULL RANGE, INCLUDING PREMIUM FINISHES/COLORS.
18. DOORS LOCATED IN CLOSETS OR PARTITIONS TO BE CENTERED WITHIN WALL UNLESS OTHERWISE NOTED.
19. CUSTOM PAINT ELECTRICAL PANEL BOXES IN RESIDENTIAL UNITS - MATCH ADJACENT WALL COLOR.
20. ALIGN FINISHED FACE OF WALLS WHERE DIFFERENT WALL TYPES ABUT EACH OTHER.
21. GENERAL FLOOR PLAN NOTES APPLY TO ALL FLOOR PLANS OF THIS PROJECT.
22. ALL DIMENSIONS, MATERIAL INDICATIONS AND NOTES SHOWN ON ONE DRAWING SHALL APPLY TO ALL OTHER SIMILAR DRAWINGS UNLESS OTHERWISE NOTED.
23. VERIFY ALL DIMENSIONED CONDITIONS IN THE FIELD PRIOR TO SHOP DRAWING SUBMITTAL/FABRICATION/CONSTRUCTION. WHEN DIMENSIONS AND/OR CONDITIONS AS INDICATED ON THE DRAWINGS CONFLICT WITH ACTUAL, CONTACT THE ARCHITECT IN WRITING FOR CLARIFICATION.
24. FOR THOSE EXISTING FINISHES DAMAGED OR EXPOSED DURING DEMOLITION, PATCH & REPAIR ALL EXISTING FINISHES TO REMAIN AND MATCH THEM TO EXISTING ADJACENT CONDITIONS . FINISH AND REPAIR SHALL RESTORE CONTINUITY OF EXISTING ADJACENT FINISH . PROVIDE NEW MATERIALS WHERE MISSING OR WHERE CONTINUITY OF FINISH CANNOT BE ACHIEVED BY REPAIR.
25. REPLACE SALVAGED SIGNAGE, ARTWORK, DISPLAY BOARDS AND OTHER ASSOCIATED WALL MOUNTED CLASSROOM EQUIPMENT REMOVED DURING DEMOLITION. LOCATIONS WHERE DIRECTED BY ARCHITECT.
26. FOR DRAWING CLARITY, NOT ALL SLAB INFILLS HAVE BEEN SHOWN. SLAB INFILLS CORRESPOND SLAB REMOVAL REGIONS IN THE DEMOLITION DRAWINGS . REF. STRUCTURAL DRAWINGS FOR NEW WORK REQUIREMENTS.

CJS ARCHITECTS
BUFFALO | ROCHESTER
www.cjsarchitects.com

ARCHITECT
CJS ARCHITECTS
755 SENECA STREET, BUFFALO, NY 14210
(716)716.856.6448)

STRUCTURAL ENGINEER
TREDO ENGINEERS
755 SENECA STREET, BUFFALO, NY 14210
(716)716.876.7147)

MEP.FP ENGINEER
BUFFALO ENGINEERING, P.C.
4245UNION ROAD, SUITE 204 BUFFALO, NY 14425
(716.633.5300)

CIVIL ENGINEER
TREDO ENGINEERS
755 SENECA STREET, BUFFALO, NY 14210
(716)716.876.7147)

REGISTERED ARCHITECT
ANDREW E. STRANG
019747
STATE OF NEW YORK

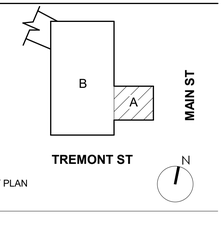

KEY PLAN

RIVIERA THEATRE AND ORGAN PRESERVATION SOCIETY

RIVIERA THEATRE GREEN ROOM

67 WEBSTER ST.
NORTH TONAWANDA, NY
14120

REV. #	DESCRIPTION	DATE

JOB NO.	2545
SCALE	As indicated
ISSUE DATE	10/21/2026
DRAWN BY	Author
CHECKED BY	Checker

THIS IS A SINGLE SHEET OF A COHESIVE SET OF CONSTRUCTION DOCUMENTS (INCLUDING DRAWINGS AND SPECIFICATIONS). INTERPRETATION OF THE INFORMATION AS PRESENTED SHOULD BE BASED ON THE ENTIRE SET OF DOCUMENTS.

DRAWING TITLE

ROOF PLAN

A-102

100% CONSTRUCTION DOCUMENTS

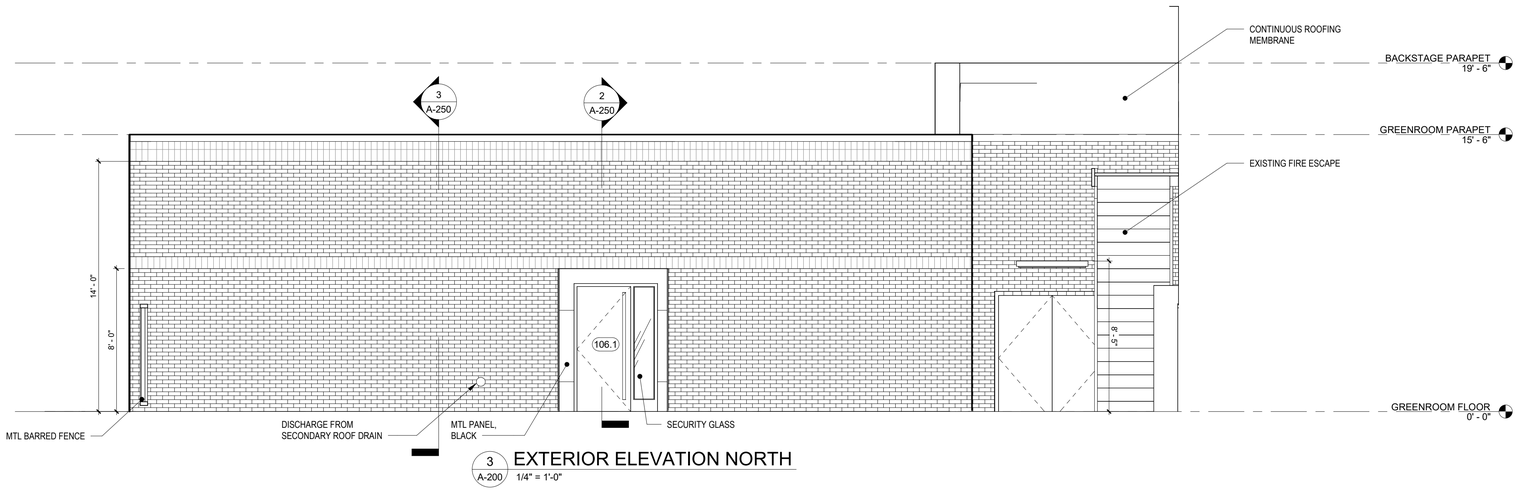

3 A-200 EXTERIOR ELEVATION NORTH
1/4" = 1'-0"

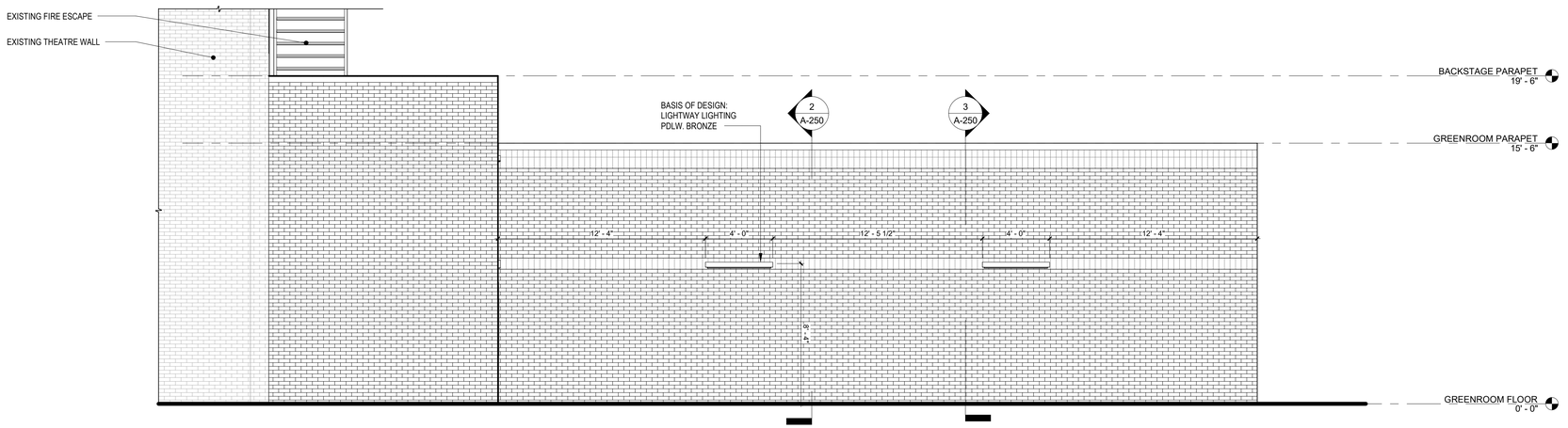

2 A-200 EXTERIOR ELEVATION SOUTH
1/4" = 1'-0"

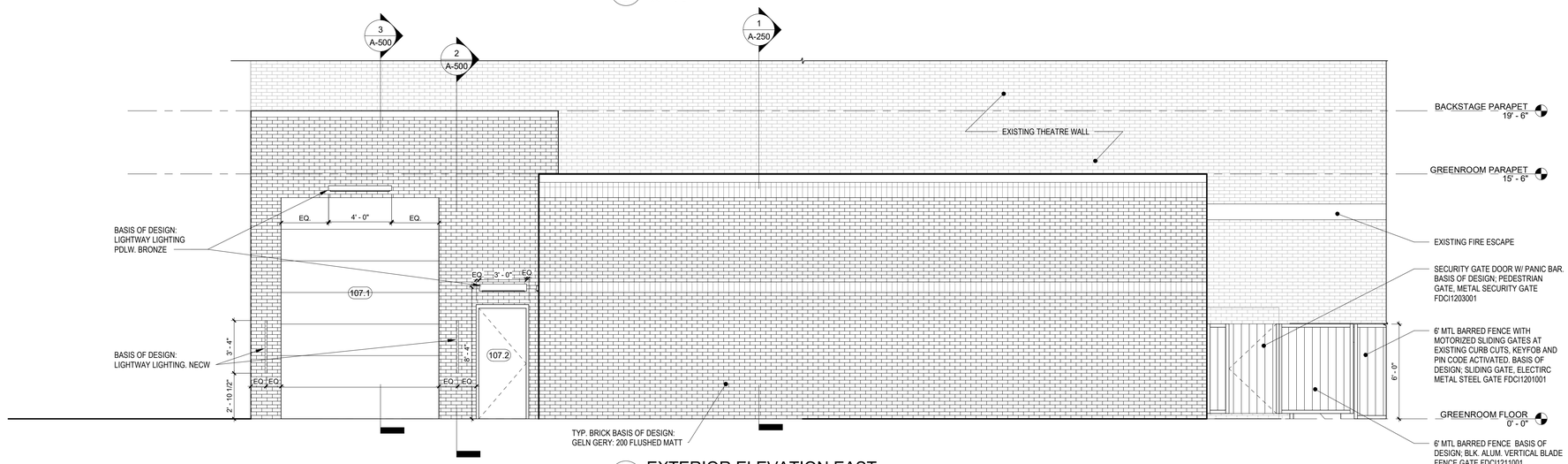

1 A-200 EXTERIOR ELEVATION EAST
1/4" = 1'-0"

CJS ARCHITECTS
BUFFALO | ROCHESTER
www.cjsarchitects.com

ARCHITECT
CJS ARCHITECTS
755 SENECA STREET, BUFFALO, NY 14210
(716)716.856.6448

STRUCTURAL ENGINEER
TREDO ENGINEERS
755 SENECA STREET, BUFFALO, NY 14210
(716)716.876.7147)

MEP.FP ENGINEER
BUFFALO ENGINEERING, P.C.
4245UNION ROAD, SUITE 204 BUFFALO, NY 14425
(716.633.5300)

CIVIL ENGINEER
TREDO ENGINEERS
755 SENECA STREET, BUFFALO, NY 14210
(716)716.876.7147)

REGISTERED ARCHITECT
ANDREW E. STAMM
019747
STATE OF NEW YORK

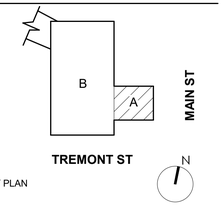

KEY PLAN

RIVIERA THEATRE AND ORGAN PRESERVATION SOCIETY

RIVIERA THEATRE GREEN ROOM

67 WEBSTER ST.
NORTH TONAWANDA, NY
14120

REV. #	DESCRIPTION	DATE

JOB NO.	2545
SCALE	As indicated
ISSUE DATE	10/21/2026
DRAWN BY	XXX
CHECKED BY	XXX

THIS IS A SINGLE SHEET OF A COHESIVE SET OF CONSTRUCTION DOCUMENTS (INCLUDING DRAWINGS AND SPECIFICATIONS). INTERPRETATION OF THE INFORMATION AS PRESENTED SHOULD BE BASED ON THE ENTIRE SET OF DOCUMENTS.

DRAWING TITLE

EXTERIOR ELEVATIONS

A-200

100% CONSTRUCTION DOCUMENTS

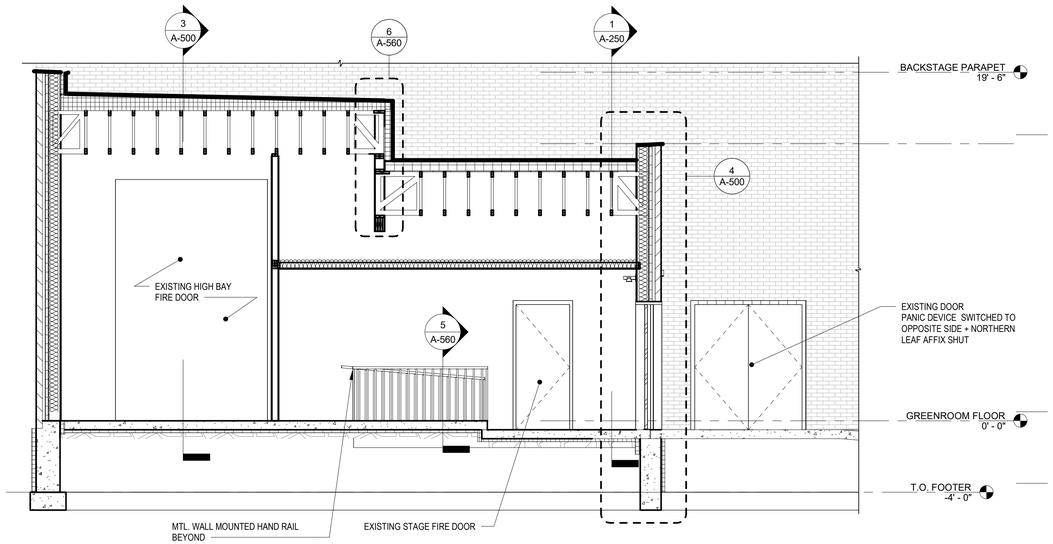

4 A-250 BACKSTAGE SECTION
1/4" = 1'-0"

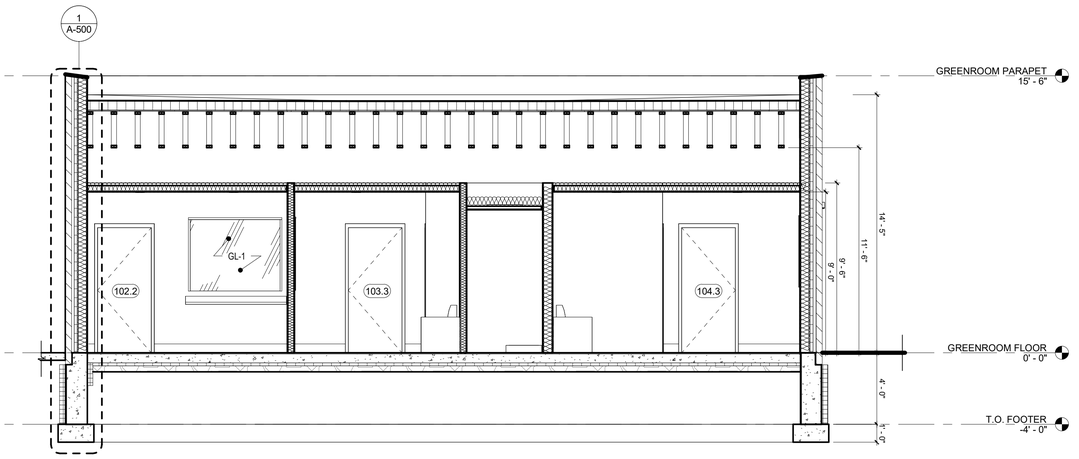

3 A-250 BUILDING SECTION 2
1/4" = 1'-0"

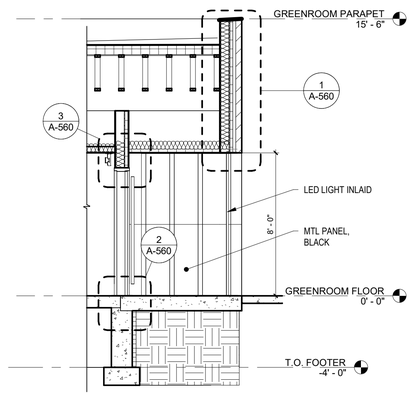

2 A-250 EXTERIOR ENTRANCE SECTION
1/4" = 1'-0"

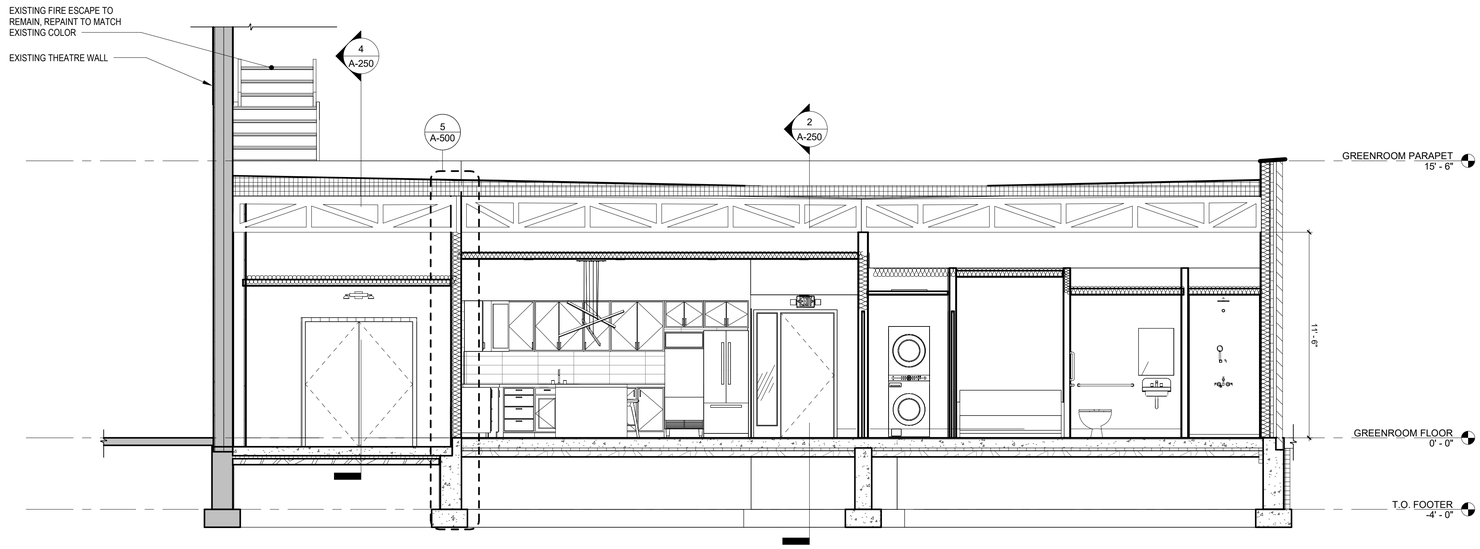

1 A-250 BUILDING SECTION 1
1/4" = 1'-0"

CJS ARCHITECTS
BUFFALO | ROCHESTER
www.cjsarchitects.com

ARCHITECT
CJS ARCHITECTS
755 SENECA STREET, BUFFALO, NY 14210
(716)716.856.6448)

STRUCTURAL ENGINEER
TREDO ENGINEERS
755 SENECA STREET, BUFFALO, NY 14210
(716)716.876.7147)

MEP.FP ENGINEER
BUFFALO ENGINEERING, P.C.
4245UNION ROAD, SUITE 204 BUFFALO, NY 14425
(716.633.5300)

CIVIL ENGINEER
TREDO ENGINEERS
755 SENECA STREET, BUFFALO, NY 14210
(716)716.876.7147)

REGISTERED ARCHITECT
ANDREW E. STRANG
019747
STATE OF NEW YORK

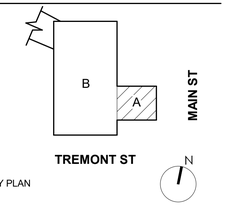

KEY PLAN

RIVIERA THEATRE AND
ORGAN PRESERVATION
SOCIETY

RIVIERA THEATRE GREEN ROOM

67 WEBSTER ST.
NORTH TONAWANDA, NY
14120

REV. #	DESCRIPTION	DATE

JOB NO.	2545
SCALE	As indicated
ISSUE DATE	10/21/2026
DRAWN BY	XXX
CHECKED BY	XXX

THIS IS A SINGLE SHEET OF A COHESIVE
SET OF CONSTRUCTION DOCUMENTS
(INCLUDING DRAWINGS AND SPECIFICATIONS).
INTERPRETATION OF THE INFORMATION
AS PRESENTED SHOULD BE BASED ON
THE ENTIRE SET OF DOCUMENTS.

DRAWING TITLE

BUILDING SECTIONS

A-250

100% CONSTRUCTION DOCUMENTS



1 A-400 REFLECTED CEILING PLAN
1/4" = 1'-0"

GENERAL RCP NOTES

1. REFER TO SHEET A800 FOR WALL TYPES, MATERIAL LEGEND, SYMBOL LEGEND AND ABBREVIATIONS USED.
2. ALL LIGHT FIXTURES, SPRINKLER HEADS, GRILLES, DIFFUSERS, ETC. LOCATED WITHIN ACT CEILINGS SHALL BE CENTERED IN CEILING TILES.
3. ALL ACT CEILING GRID SHALL BE CENTERED WITHIN SPACES & LAYED OUT TO PREVENT THE CUTTING OF TILES TO ANY DIMENSION LESS THAN 6" (UNLESS OTHERWISE INDICATED).
4. IN AN EFFORT TO ENSURE THAT CEILING HEIGHTS INDICATED ON THESE DOCUMENTS ARE MAINTAINED, ALL SUB-CONTRACTORS ARE REQUIRED TO COORDINATE W/OTHER TRADES ON MOUNTING HEIGHTS OF ALL MEP ITEMS LOCATED ABOVE ACT CEILINGS PRIOR TO INSTALLATION OF ANY ITEMS. ANY WORK INSTALLED THAT WOULD PREVENT THE INSTALLATION OF THE CEILING AT THE HEIGHT INDICATED ON THESE DOCUMENTS SHALL BE REMOVED & REINSTALLED AS REQUIRED AT THE EXPENSE OF THE SUB-CONTRACTOR RESPOSIBLE FOR INSTALLING SAID WORK.
5. REFER TO U.L. FIRE RESISTANCE DIRECTORY FOR DETAILS ON FIRE RATED WALLS, COLUMNS ENCLOSURES, FLOOR/CEILING ASSEMBLIES & CEILING/ROOF ASSEMBLIES.
6. PROVIDE DRAFTSTOPPING AT THE TOP OF ALL CONCEALED WALL CAVITIES. DRAFTSTOPPING SHALL BE OF AN BCNYS APPROVED MATERIAL AND SHALL PREVENT THE PASSAGE OF SMOKE FROM THE WALL CAVITY INTO ANY ADJACENT CEILING/FLOOR OR CEILING/ROOF CAVITIES.
7. ALL STRUCTURE., MECH., ELEC., PLUMB. AND FIRE PROTECTION ELEMENTS SHOWN ARE FOR REFERENCE ONLY. CONTRACTOR SHALL REFER TO OTHER SECTIONS OF THE DOCUMENTS AS APPOPRIATE FOR OTHER TRADES. WHERE DISCREPANCIES EXIST BETWEEN ARCH. DRAWINGS AND OTHER TRADES CONTRACTOR SHALL NOTIFY CM OR GC & ARCHITECT PRIOR TO PERFORMING ANY WORK RELATED TO SAID DISCREPANCY.
8. COORD. MECH COVERS, GRILLES, ETC. WITH MECH. DWG'S. COLORS TO BE SELECTED BY ARCHITECT FROM MANUFACTURES FULL RANGE, INCLUDING PREMIUM FINISHES/COLORS.
9. SPRINKLER HEADS LOCATED IN GWB CEILINGS TO BE CONCEALED TYPE HEADS.
10. REFER TO RM FINISH SCHEDULES FOR ALL INTERIOR FINISHES.
11. SPRINKLER HEADS TO BE LOCATED PER FIRE PROTECTION DWG'S UNLESS OTHERWISE NOTED.
12. ALL KEY PLANS ARE FOR REFERENCE ONLY.

RCP'S MATERIALS LEGEND

ALL MATERIALS NOT NECESSARILY USED

- **EXP** - EXPOSED - EXIST TO REMAIN; PATCH & REPAIR PLASTER AS REQ'D - PAINT
- **ACT 1** - 2'x2' ACOUSTICAL CEILING TILE
- **ACT 2** - 2'x4' ACOUSTICAL CEILING TILE-NOT USED
- **GWB 1** - SUSPENDED GYPSUM WALL BOARD CEILING SYSTEM - PAINT
- **MTL** - BASIS OF DESIGN; WESTERN STATES METAL ROOFING PANEL T-GROOVE 16" PANEL W/ 2" REVEAL, MATTE BLACK

RCP'S SYMBOLS LEGEND

ALL SYMBOLS NOT NECESSARILY USED; SYMBOLS NOT TO SCALE

- KITCHEN ISLAND PENDANT LIGHT FIXT. - ARCH./INTERIOR DESIGNER TO DETERMINE MOUNTING HEIGHT IN FIELD
- PENDANT FIXTURE
- SURFACE MOUNTED LIGHT FIXT.
- WALL MOUNTED AT BATHROOM MIRROR
- TAPERED LINEAR LIGHT
- DIRECT/INDIRECT LIGHT FIXT.
- SPRINKLER HEAD - REF. FP DWG'S
- SPRINKLER HEAD - REF. FP DWG'S
- DIFFUSER AT ACT - REF. MECH DWG'S
- DIFFUSER AT GWB. - REF. MECH DWG'S
- SECURITY CAMERA
- EMERGENCY SIGNAGE
- 2'x2' LIGHT
- VENT/FAN LIGHT
- ACCESS PANEL

CJS ARCHITECTS
BUFFALO | ROCHESTER
www.cjsarchitects.com

ARCHITECT
CJS ARCHITECTS
755 SENECA STREET, BUFFALO, NY 14210
(716)716.856.6448)

STRUCTURAL ENGINEER
TREDO ENGINEERS
755 SENECA STREET, BUFFALO, NY 14210
(716)716.876.7147)

MEP.FP ENGINEER
BUFFALO ENGINEERING, P.C.
4245UNION ROAD, SUITE 204 BUFFALO, NY 14425
(716.633.5300)

CIVIL ENGINEER
TREDO ENGINEERS
755 SENECA STREET, BUFFALO, NY 14210
(716)716.876.7147)

REGISTERED ARCHITECT
ROBERT E. STAHL
019747
STATE OF NEW YORK

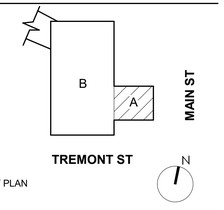

KEY PLAN

RIVIERA THEATRE AND ORGAN PRESERVATION SOCIETY

RIVIERA THEATRE GREEN ROOM

67 WEBSTER ST.
NORTH TONAWANDA, NY
14120

REV. #	DESCRIPTION	DATE

JOB NO.	2545
SCALE	As indicated
ISSUE DATE	10/21/2026
DRAWN BY	XXX
CHECKED BY	XXX

THIS IS A SINGLE SHEET OF A COHESIVE SET OF CONSTRUCTION DOCUMENTS (INCLUDING DRAWINGS AND SPECIFICATIONS). INTERPRETATION OF THE INFORMATION AS PRESENTED SHOULD BE BASED ON THE ENTIRE SET OF DOCUMENTS.

DRAWING TITLE

REFLECTED CEILING PLAN

A-400

100% CONSTRUCTION DOCUMENTS

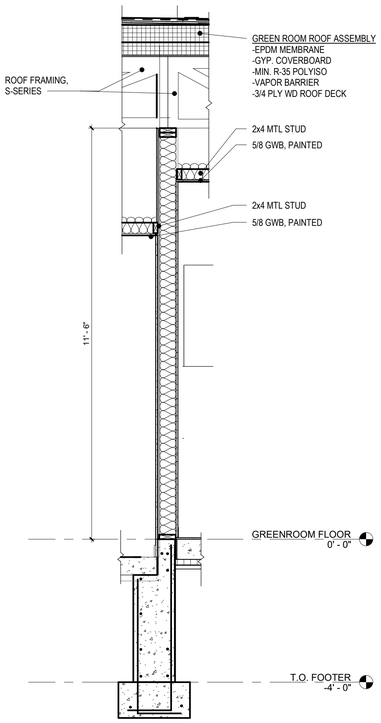

5 A-500 DIVIDING WALL SECTION
1/2" = 1'-0"

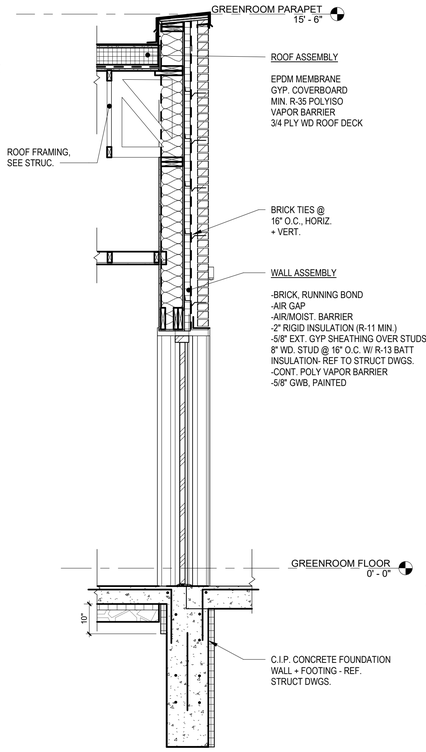

4 A-500 EGRESS DOOR AT BACK STAGE WALL
1/2" = 1'-0"

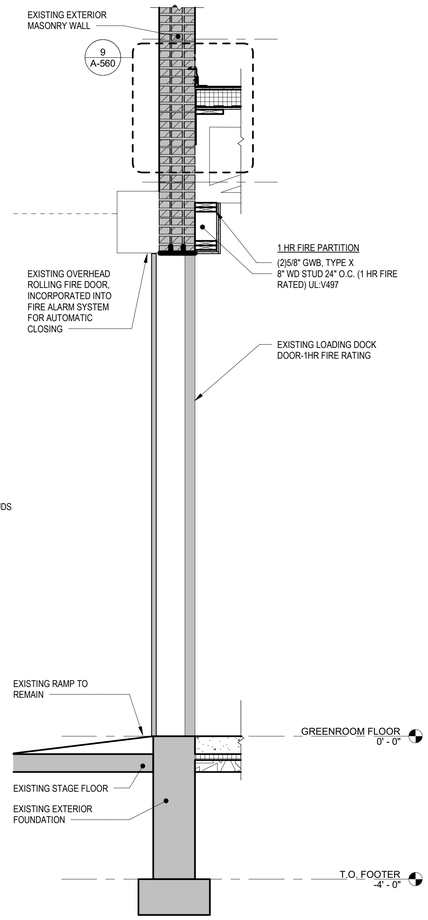

3 A-500 HIGH BAY INTERIOR WALL SECTION
1/2" = 1'-0"

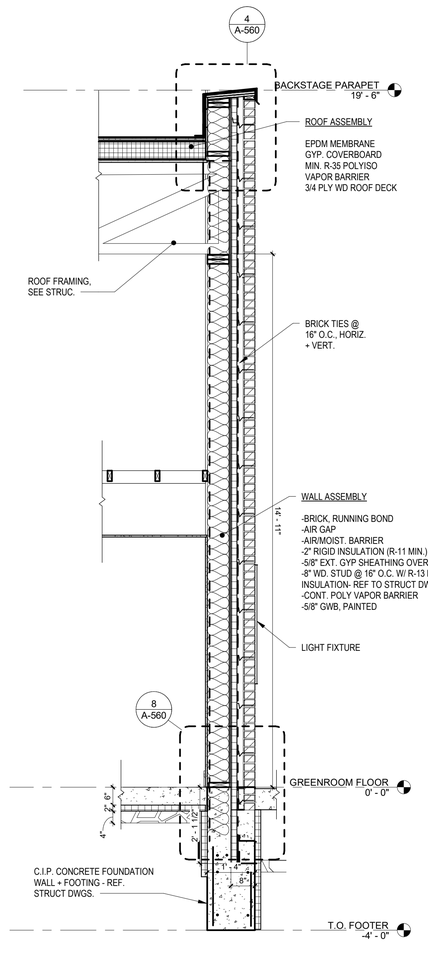

2 A-500 HIGH BAY EXTERIOR WALL SECTION
1/2" = 1'-0"

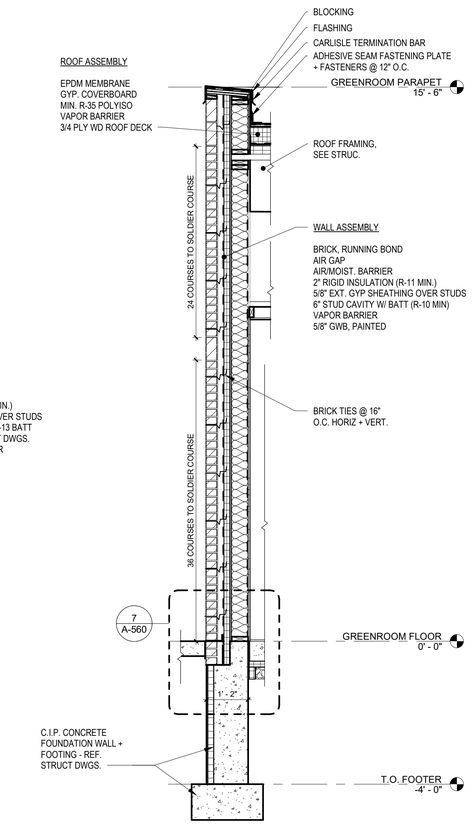

1 A-500 GREENROOM EXTERIOR WALL SECTION
1/2" = 1'-0"

CJS ARCHITECTS
BUFFALO | ROCHESTER
www.cjsarchitects.com

ARCHITECT
CJS ARCHITECTS
755 SENECA STREET, BUFFALO, NY 14210
(716)716.856.6448

STRUCTURAL ENGINEER
TREDO ENGINEERS
755 SENECA STREET, BUFFALO, NY 14210
(716)716.876.7147)

MEP.FP ENGINEER
BUFFALO ENGINEERING, P.C.
4245UNION ROAD, SUITE 204 BUFFALO, NY 14425
(716.633.5300)

CIVIL ENGINEER
TREDO ENGINEERS
755 SENECA STREET, BUFFALO, NY 14210
(716)716.876.7147)

REGISTERED ARCHITECT
ANDREW E. STAPF
019747
STATE OF NEW YORK

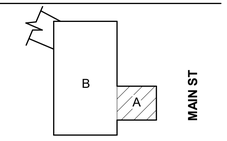

KEY PLAN

RIVIERA THEATRE AND ORGAN PRESERVATION SOCIETY

RIVIERA THEATRE GREEN ROOM

67 WEBSTER ST.
NORTH TONAWANDA, NY
14120

REV. #	DESCRIPTION	DATE

JOB NO.	2545
SCALE	As indicated
ISSUE DATE	10/21/2026
DRAWN BY	XXX
CHECKED BY	XXX

THIS IS A SINGLE SHEET OF A COHESIVE SET OF CONSTRUCTION DOCUMENTS (INCLUDING DRAWINGS AND SPECIFICATIONS). INTERPRETATION OF THE INFORMATION AS PRESENTED SHOULD BE BASED ON THE ENTIRE SET OF DOCUMENTS.

DRAWING TITLE

EXTERIOR WALL SECTIONS & DETAILS

A-500

100% CONSTRUCTION DOCUMENTS

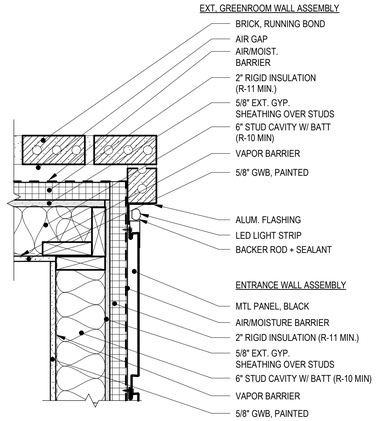

EXTERIOR ENTRANCE CORNER DETAIL

6 A-550 1 1/2" = 1'-0"

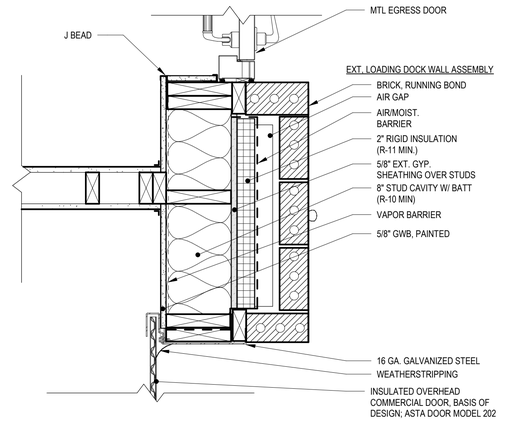

LOADING DOCK JAMB DETAIL

3 A-550 1 1/2" = 1'-0"

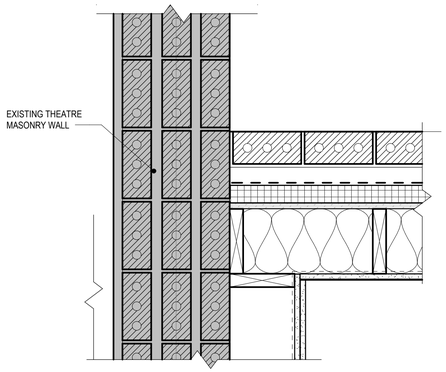

LOADING DOCK @ THEATRE WALL DETAIL 2

5 A-550 1 1/2" = 1'-0"

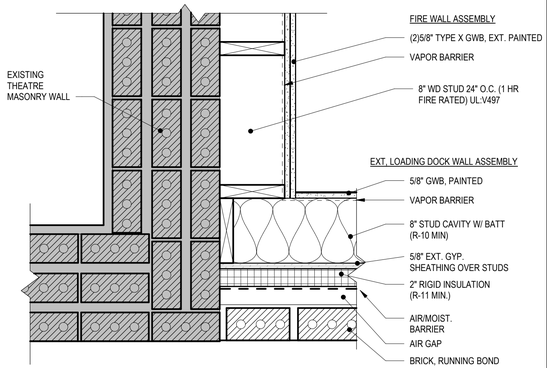

LOADING DOCK AT EXTERIOR THEATRE WALL DETAIL

2 A-550 1 1/2" = 1'-0"

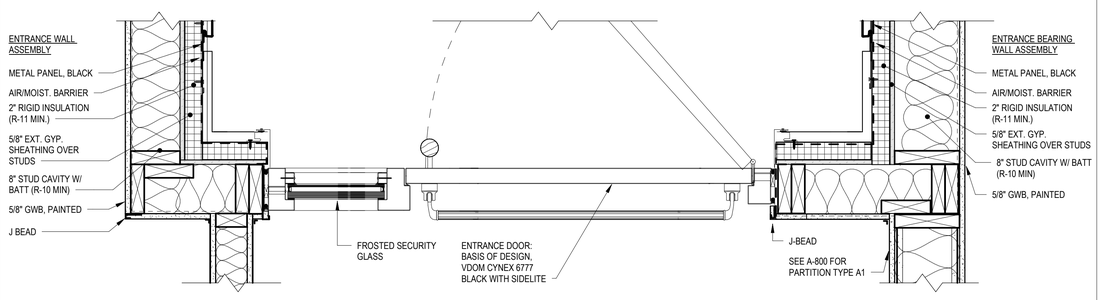

GREENROOM ENTRANCE DETAIL

7 A-550 1 1/2" = 1'-0"

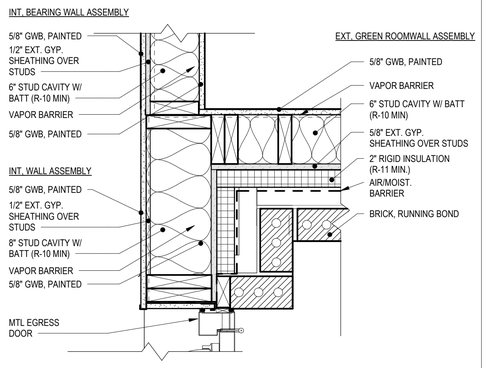

GREENROOM @ LOADING DOCK WALL DETAIL

4 A-550 1 1/2" = 1'-0"

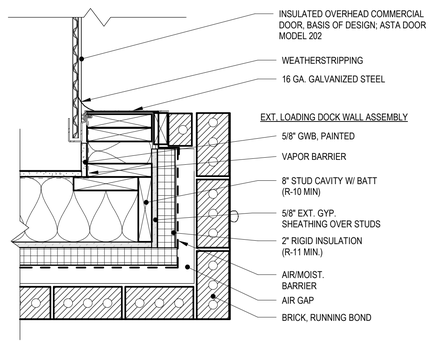

LOADING DOCK CORNER DETAIL

1 A-550 1 1/2" = 1'-0"

CJS ARCHITECTS
BUFFALO | ROCHESTER
www.cjsarchitects.com

ARCHITECT
CJS ARCHITECTS
755 SENECA STREET, BUFFALO, NY 14210
(716)716.856.6448)

STRUCTURAL ENGINEER
TREDO ENGINEERS
755 SENECA STREET, BUFFALO, NY 14210
(716)716.876.7147)

MEP.FP ENGINEER
BUFFALO ENGINEERING, P.C.
4245UNION ROAD, SUITE 204 BUFFALO, NY 14425
(716.633.5300)

CIVIL ENGINEER
TREDO ENGINEERS
755 SENECA STREET, BUFFALO, NY 14210
(716)716.876.7147)

REGISTERED ARCHITECT
ANDREW E. STAHL
019741
STATE OF NEW YORK

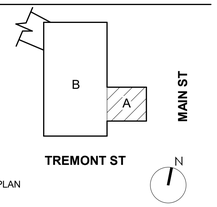

KEY PLAN

RIVIERA THEATRE AND ORGAN PRESERVATION SOCIETY

RIVIERA THEATRE GREEN ROOM

67 WEBSTER ST.
NORTH TONAWANDA, NY
14120

REV. #	DESCRIPTION	DATE

JOB NO.	2545
SCALE	As indicated
ISSUE DATE	10/21/2026
DRAWN BY	Author
CHECKED BY	Checker

THIS IS A SINGLE SHEET OF A COHESIVE SET OF CONSTRUCTION DOCUMENTS (INCLUDING DRAWINGS AND SPECIFICATIONS). INTERPRETATION OF THE INFORMATION AS PRESENTED SHOULD BE BASED ON THE ENTIRE SET OF DOCUMENTS.

DRAWING TITLE

PLAN DETAILS

A-550

100% CONSTRUCTION DOCUMENTS

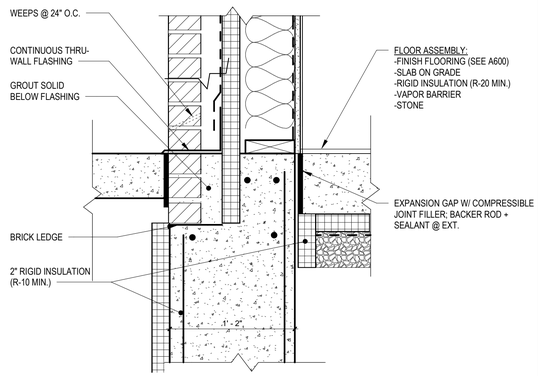

7 A-560 EXTERIOR GREEN ROOM WALL BASE DETAIL
1 1/2" = 1'-0"

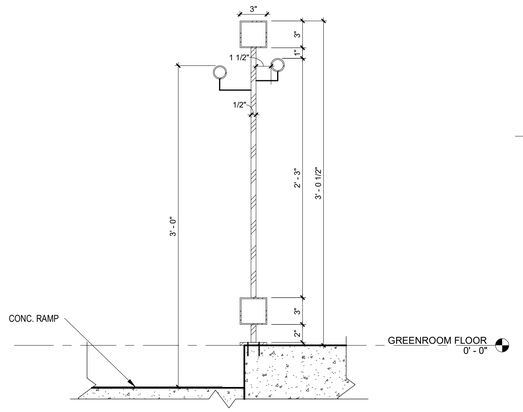

5 A-560 HANDRAIL SECTION DETAIL
1 1/2" = 1'-0"

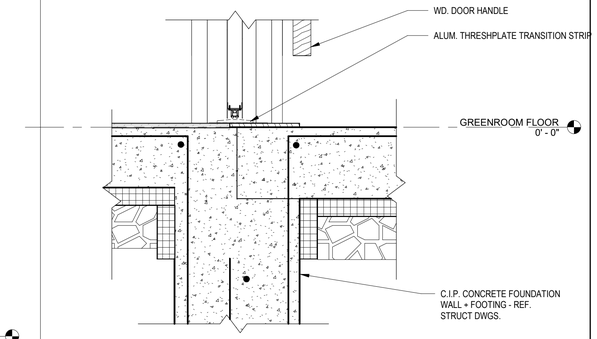

EXTERIOR ENTRANCE SILL DETAIL
2 A-560 1 1/2" = 1'-0"

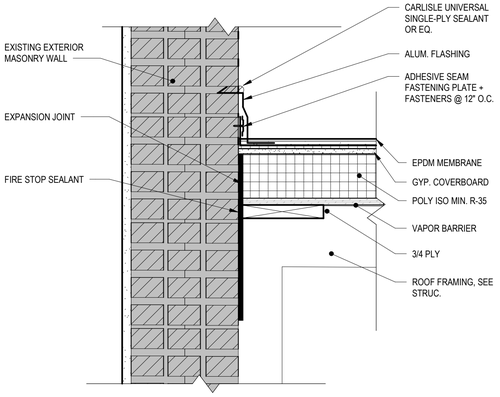

9 A-560 ROOF AT EXISTING THEATRE WALL
1 1/2" = 1'-0"

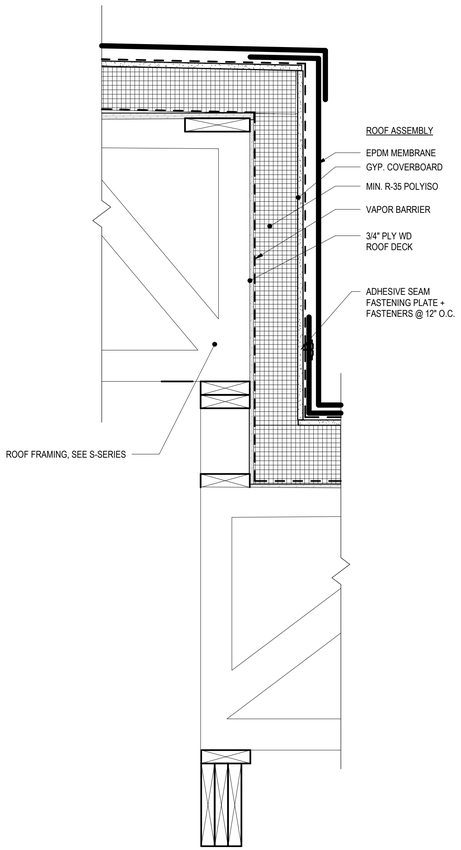

6 A-560 LOADING DOCK ROOF TRANSITION
1 1/2" = 1'-0"

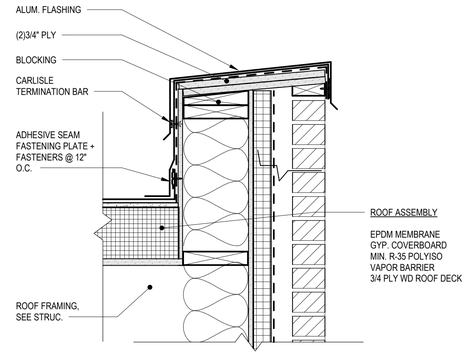

4 A-560 TYPE FLASHING DETAIL
1 1/2" = 1'-0"

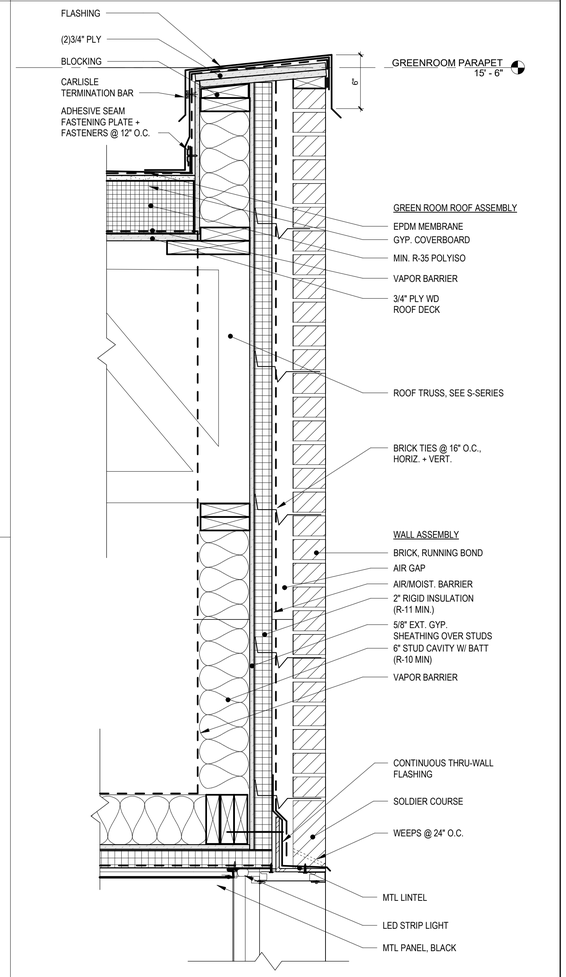

1 A-560 EXTERIOR ENTRANCE SECTION DETAIL
1 1/2" = 1'-0"

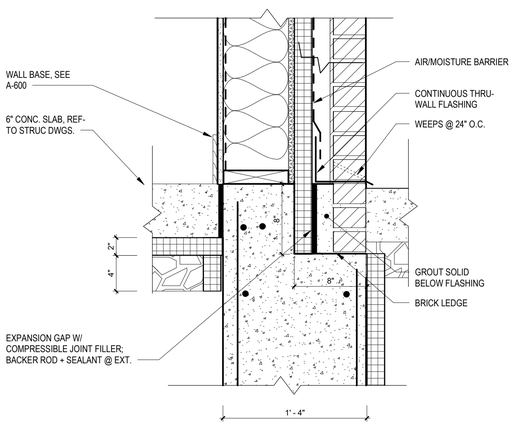

8 A-560 LOADING DOCK WALL BASE DETAIL
1 1/2" = 1'-0"

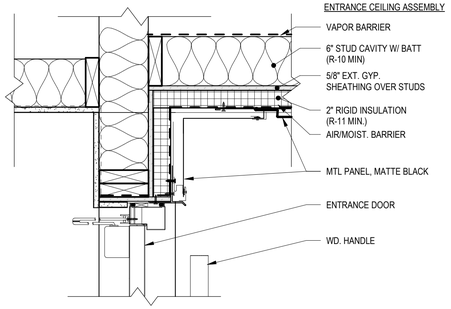

EXTERIOR ENTRANCE HEAD DETAIL
3 A-560 1 1/2" = 1'-0"

CJS ARCHITECTS
BUFFALO | ROCHESTER
www.cjsarchitects.com

ARCHITECT
CJS ARCHITECTS
755 SENECA STREET, BUFFALO, NY 14210
(716)716.856.6448

STRUCTURAL ENGINEER
TREDO ENGINEERS
755 SENECA STREET, BUFFALO, NY 14210
(716)716.876.7147

MEP.FP ENGINEER
BUFFALO ENGINEERING, P.C.
4245UNION ROAD, SUITE 204 BUFFALO, NY 14425
(716.633.5300)

CIVIL ENGINEER
TREDO ENGINEERS
755 SENECA STREET, BUFFALO, NY 14210
(716)716.876.7147)

REGISTERED ARCHITECT
ANDREW E. STAHL
019741
STATE OF NEW YORK

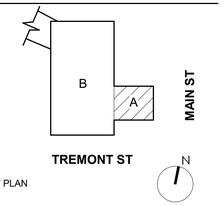

KEY PLAN

RIVIERA THEATRE AND ORGAN PRESERVATION SOCIETY

RIVIERA THEATRE GREEN ROOM

67 WEBSTER ST.
NORTH TONAWANDA, NY
14120

REV. #	DESCRIPTION	DATE

JOB NO.	2545
SCALE	As indicated
ISSUE DATE	10/21/2026
DRAWN BY	Author
CHECKED BY	Checker

THIS IS A SINGLE SHEET OF A COHESIVE SET OF CONSTRUCTION DOCUMENTS (INCLUDING DRAWINGS AND SPECIFICATIONS). INTERPRETATION OF THE INFORMATION AS PRESENTED SHOULD BE BASED ON THE ENTIRE SET OF DOCUMENTS.

DRAWING TITLE

SECTION DETAILS

A-560

100% CONSTRUCTION DOCUMENTS

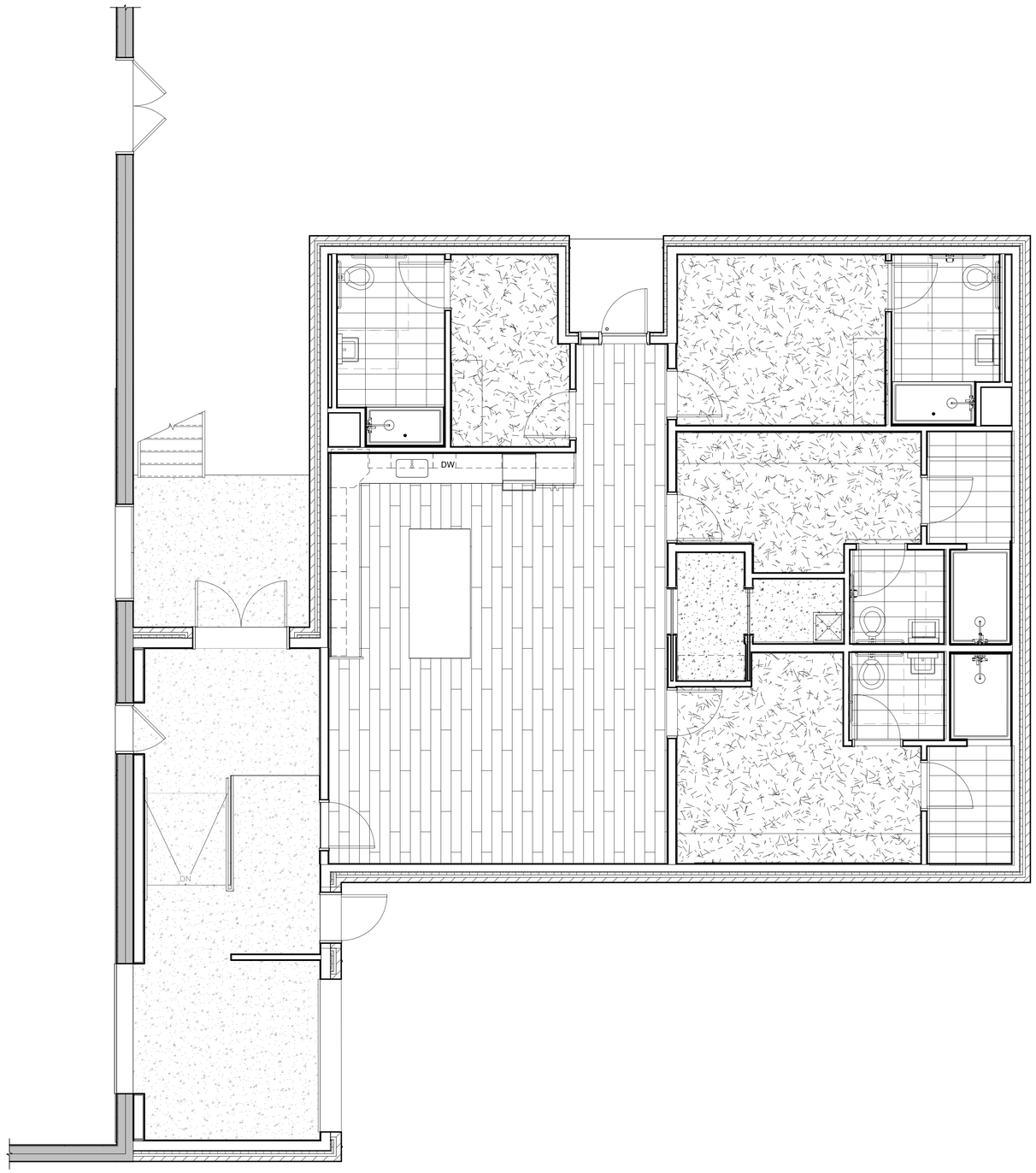

1 A-600 FIRST FLOOR PLAN
1/4" = 1'-0"

GENERAL PLAN NOTES

1. THE CONTRACTOR DOCUMENTS ARE COMPLIMENTARY TO EACH OTHER. WHAT IS REQUIRED FOR ONE DRAWING SHALL BE AS BINDING AS IF REQUIRED FOR ALL.
2. ALL WALLS TO BE PAINTED P-1 UNLESS OTHERWISE NOTED.
3. ALL DRYWALL CEILINGS, SOFFITS AND FASCIAS SHALL BE PAINTED CEILING WHITE, UNLESS NOTED OTHERWISE. FOR LOCATIONS REFER TO CEILING PLAN.
4. ALL EXISTING WALLS, COLUMNS AND CEILINGS TO BE CLEANED AND PREPARED FOR PAINTING. PAINT CEILINGS UNLESS OTHERWISE NOTED.
5. CONTRACTOR SHALL INSPECT & APPROVE ALL SUB-SURFACE PRIOR TO INSTALLATION OF FINISHES. STRICTLY COMPLY WITH THE MANUFACTURER'S INSTRUCTIONS & RECOMMENDATIONS FOR BOTH PREPARATION OF SURFACES AND INSTALLATION OF FINISHES. ALL SUB-SURFACE SHALL BE PROPERLY REPAIRED TO RECEIVE INTENDED & SPECIFIED FINISHES. SUB-SURFACES TO RECEIVE NEW FINISHES INCLUDE, BUT ARE NOT LIMITED TO; EXISTING GYPSUM WALL BOARD, CEILINGS, NEW GYPSUM WALL BOARD, CONDUIT, COLUMNS, DOOR FRAMES, EXISTING MASONRY WALLS, WINDOW FRAMES, NEW MASONRY WALLS, FLOORS.
6. PROVIDE ALL REQUIRED TRANSITION STRIPS BETWEEN NEW AND EXISTING FLOORING MATERIALS, AND AT ALL CARPET / TILE / RESILIENT FLOORING TRANSITION POINTS, IN COLOR AS SELECTED BY ARCHITECT.
7. WHERE FLOORING MATERIAL CHANGES AT DOOR OPENINGS, TRANSITION SHALL OCCUR AT CENTERLINE OF DOOR OPENING.
8. HATCH INDICATES MATERIAL AND SCOPE ONLY; DOES NOT REPRESENT ORIENTATION OR PATTERN. CONTRACTOR TO COORDINATE PATTERN AND DIRECTION OF CARPET WITH ARCHITECT PRIOR TO COMMENCEMENT OF WORK.
9. ALL BASE TYPES SHALL BE B-1; 4" HIGH UNLESS OTHERWISE NOTED. USE STRAIGHT BASE AT CARPET AND COVE BASE AT VCT.
10. ALL EXISTING PAINTED WOOD DOORS AND METAL FRAMES SHALL BE PAINTED, 2 COATS SEMI-GLOSS ENAMEL PAINT.
11. VERIFY LEVEL 5 FINISH AT ALL PARTITIONS WITH ACCENT COLORS OR SPECIALTY PAINT SCHEDULED.
12. THE CONTRACTOR SHALL SUBMIT CARPET INSTALLATION PLANS SHOWING CARPET TYPE, SEAMING AND DIRECTION FOR APPROVAL BY ARCHITECT PRIOR TO ORDERING.
13. FLOOR FINISH AND WALL BASE TO CONTINUE UNDER COUNTER TOPS, ANY MILLWORK OPENINGS AND HANDICAPPED KITCHEN SINK CABINETS.

FINISH MATERIALS LEGEND

KEY/ PATTERN	DESCRIPTION	LOCATION / COMMENTS
FLOOR		
CPT-1	MANUF: INTERFACE STYLE: STEP REPEAT COLLECTION COLOR: SR799 KHAKI INSTALLATION: QUARTER TURN	ENTRANCE WALK OFF MAT 32" x 42" CARPET
CPT-2	MANUF: INTERFACE STYLE: SPRUCE IT UP COLOR: HEMLOCK 108770 INSTALLATION: ASHLAR	MAIN ROOM ACCENT AREA
CPT-3	MANUF: SHAW LVT STYLE: INSPIRE 5.0 COLOR:ENCOURAGE INSTALLATION:MONOLITH	DRESSING ROOMS
LVT-1	MANUF: INTERFACE LVT STYLE:NATURAL WOOD GRAINS COLOR: BEECH INSTALLATION: ASHLAR	ALL LOCATIONS, U.O.N. 9" x 40" PLANKS
EPX-1	MANUF: EPOXY NON-SLIP SURFACE STYLE: COLOR: INSTALLATION:	LOADING BAY
CT-1	MANUF: STYLE: OUTLANDER COLLECTION MARINE COLOR: INSTALLATION:	BATHROOMS 12" x 24" TILE
WLK-1	MANUF: STYLE: COLOR: INSTALLATION:	WALK OFF MAT
BASE		
B-1	MANUF: JOHNSONITE WALL BASE STYLE: 4-1/4" REVEAL VN1 COLOR: WHITE	AT LVT
B-2	MANUF: DALTILE STYLE: OUTLANDER COLLECTION MARINE COLOR: OU59	BATHROOMS 12"x24"
WALL		
P-1	MANUF: SHERWIN WILLIAMS COLOR: WHITE OC-151 FINISH: EGGSHELL	All AREAS
P-2	MANUF: COLOR: FINISH:	BATHROOM
P-3	MANUF: COLOR: FINISH:	DRESSING ROOM
P-4	MANUF: COLOR: FINISH:	BACKSTAGE
P-5	MANUF:SHERWIN WILLIAMS COLOR:ACANTHUS FINISH: MATTE	ACCENTED AREA
P-6	MANUF:SHERWIN WILLIAMS COLOR: CHANTILLY LACE 0C-65 FINISH: MATTE	CEILINGS
WT-1	MANUF:MERCURY MOSAIC COLOR: BLUE BELLE 3x6 SUBWAY TILE	SHOWERS
CEILING		
FRP-1	PAINTED GYPSUM WALLBOARD ON METAL FRAMING MANUF: COLOR: FINISH:	BACKSTAGE
CWT-1	MANUF: COLOR: FINISH:	BATHROOMS SHOWERS
MILLWORK		
PL-1	MANUF: WOLF CABINETS STYLE: LOCATION:	KITCHENETTE
QTZ-1	MANUF: CAMBRIA QUARTZ STYLE: PORTRUSH LOCATION: COUNTERTOP, BACKSPLASH	KITCHENETTE
QTZ-2	MANUF: CAMBRIA QUARTZ STYLE: WOODCROFT LOCATION: KITCHEN ISLAND, WATERFALL EDGE	KITCHENETTE
SS-1	MANUF: CORIAN STYLE: SOLID SURFACE, MODERN WHITE LOCATION: COUNTERTOPS	DRESSING ROOM
OTHER		
GL-1	MANUF: STYLE: LOCATION:	DRESSING ROOM MIRRORS

NOT ALL ITEM USED

CJS ARCHITECTS
BUFFALO | ROCHESTER
www.cjsarchitects.com

ARCHITECT
CJS ARCHITECTS
755 SENECA STREET, BUFFALO, NY 14210
(716)716.856.6448

STRUCTURAL ENGINEER
TREDO ENGINEERS
755 SENECA STREET, BUFFALO, NY 14210
(716)716.876.7147

MEP.FP ENGINEER
BUFFALO ENGINEERING, P.C.
4245UNION ROAD, SUITE 204 BUFFALO, NY 14425
(716.633.5300)

CIVIL ENGINEER
TREDO ENGINEERS
755 SENECA STREET, BUFFALO, NY 14210
(716)716.876.7147)

REGISTERED ARCHITECT
ANDREW E. STAPP
019747
STATE OF NEW YORK

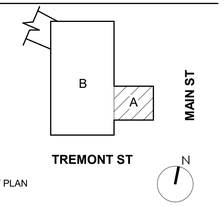

KEY PLAN

RIVIERA THEATRE AND ORGAN PRESERVATION SOCIETY

RIVIERA THEATRE GREEN ROOM

67 WEBSTER ST.
NORTH TONAWANDA, NY
14120

REV. #	DESCRIPTION	DATE

JOB NO.	2545
SCALE	As indicated
ISSUE DATE	10/21/2026
DRAWN BY	XXX
CHECKED BY	XXX

THIS IS A SINGLE SHEET OF A COHESIVE SET OF CONSTRUCTION DOCUMENTS (INCLUDING DRAWINGS AND SPECIFICATIONS). INTERPRETATION OF THE INFORMATION AS PRESENTED SHOULD BE BASED ON THE ENTIRE SET OF DOCUMENTS.

DRAWING TITLE

FINISH PLAN

A-600

100% CONSTRUCTION DOCUMENTS

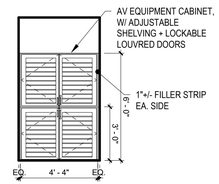

9 A-610 AV ROOM MILLWORK
1/4" = 1'-0"

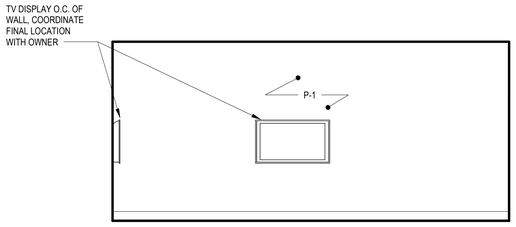

6 A-610 GREEN ROOM SEATING AREA SOUTH
1/4" = 1'-0"

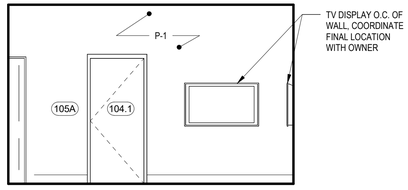

3 A-610 GREEN ROOM SEATING AREA EAST
1/4" = 1'-0"

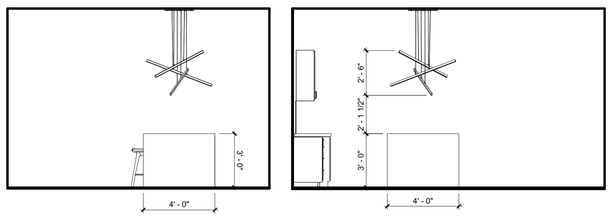

11 A-610 KITCHEN ISLAND SOUTH
1/4" = 1'-0"

8 A-610 KITCHEN ISLAND NORTH
1/4" = 1'-0"

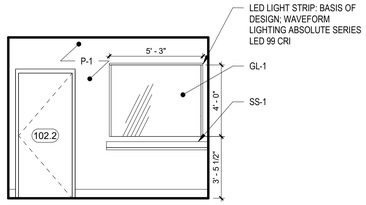

5 A-610 DRESSING ROOM 2 ELEVATION
1/4" = 1'-0"

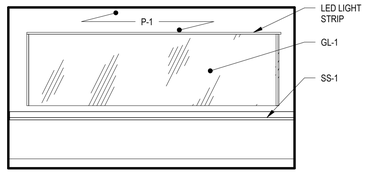

2 A-610 DRESSING ROOM ELEVATION
1/4" = 1'-0"

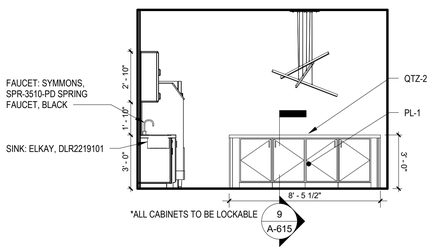

10 A-610 ISLAND ELEVATION EAST
1/4" = 1'-0"

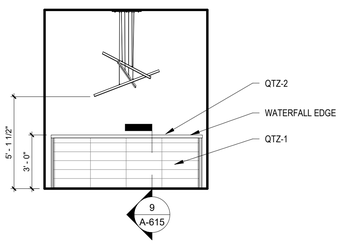

7 A-610 ISLAND ELEVATION WEST
1/4" = 1'-0"

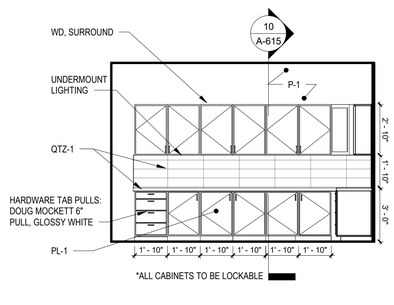

4 A-610 KITCHENETTE ELEVATION WEST
1/4" = 1'-0"

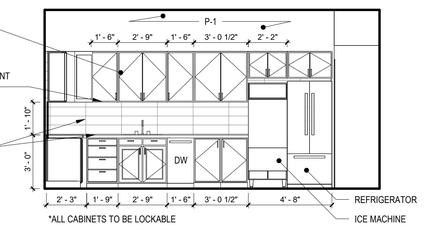

1 A-610 KITCHENETTE ELEVATION NORTH
1/4" = 1'-0"

FINISH MATERIALS LEGEND

KEY/ PATTERN	DESCRIPTION	LOCATION / COMMENTS
FLOOR		
CPT-1	MANUF: INTERFACE STYLE: STEP REPEAT COLLECTION COLOR: SR799 KHAKI INSTALLATION: QUARTER TURN	ENTRANCE WALK OFF MAT 32" x 42" CARPET
CPT-2	MANUF: INTERFACE STYLE: SPRUCE IT UP COLOR: HEMLOCK 108770 INSTALLATION: ASHLAR	MAIN ROOM ACCENT AREA
CPT-3	MANUF: SHAW LVT STYLE: INSPIRE 5.0 COLOR:ENCOURAGE INSTALLATION:MONOLITH	DRESSING ROOMS
LVT-1	MANUF: INTERFACE LVT STYLE:NATURAL WOOD GRAINS COLOR: BEECH INSTALLATION: ASHLAR	ALL LOCATIONS, U.O.N. 9" x 40" PLANKS
EPX-1	MANUF: EPOXY NON-SLIP SURFACE STYLE: COLOR: INSTALLATION:	LOADING BAY
CT-1	MANUF: STYLE: OUTLANDER COLLECTION MARINE COLOR: INSTALLATION:	BATHROOMS 12" x 24" TILE
WLK-1	MANUF: STYLE: COLOR: INSTALLATION:	WALK OFF MAT
BASE		
B-1	MANUF: JOHNSONITE WALL BASE STYLE: 4-1/4" REVEAL VN1 COLOR: WHITE	AT LVT
B-2	MANUF: DALTILE STYLE: OUTLANDER COLLECTION MARINE COLOR: OU59	BATHROOMS 12"x24"
WALL		
P-1	MANUF: SHERWIN WILLIAMS COLOR: WHITE OC-151 FINISH: EGGSHELL	All AREAS
P-2	MANUF: COLOR: FINISH:	BATHROOM
P-3	MANUF: COLOR: FINISH:	DRESSING ROOM
P-4	MANUF: COLOR: FINISH:	BACKSTAGE
P-5	MANUF:SHERWIN WILLIAMS COLOR:ACANTHUS FINISH: MATTE	ACCENTED AREA
P-6	MANUF:SHERWIN WILLIAMS COLOR: CHANTILLY LACE 0C-65 FINISH: MATTE	CEILINGS
WT-1	MANUF:MERCURY MOSAIC COLOR: BLUE BELLE 3x8 SUBWAY TILE	SHOWERS
CEILING		
FRP-1	PAINTED GYPSUM WALLBOARD ON METAL FRAMING MANUF: COLOR: FINISH:	BACKSTAGE
CWT-1	MANUF: COLOR: FINISH:	BATHROOMS SHOWERS
MILLWORK		
PL-1	MANUF: WOLF CABINETS STYLE: LOCATION:	KITCHENETTE
QTZ-1	MANUF: CAMBRIA QUARTZ STYLE: PORTRUSH LOCATION: COUNTERTOP, BACKSPLASH	KITCHENETTE
QTZ-2	MANUF: CAMBRIA QUARTZ STYLE: WOODCROFT LOCATION: KITCHEN ISLAND, WATERFALL EDGE	KITCHENETTE
SS-1	MANUF: CORIAN STYLE: SOLID SURFACE, MODERN WHITE LOCATION: COUNTERTOPS	DRESSING ROOM
OTHER		
GL-1	MANUF: STYLE: LOCATION:	DRESSING ROOM MIRRORS

NOT ALL ITEM USED

CJS ARCHITECTS
BUFFALO | ROCHESTER
www.cjsarchitects.com

ARCHITECT
CJS ARCHITECTS
755 SENECA STREET, BUFFALO, NY 14210
(716)716.856.6448)

STRUCTURAL ENGINEER
TREDO ENGINEERS
755 SENECA STREET, BUFFALO, NY 14210
(716)716.876.7147)

MEP.FP ENGINEER
BUFFALO ENGINEERING, P.C.
4245UNION ROAD, SUITE 204 BUFFALO, NY 14425
(716.633.5300)

CIVIL ENGINEER
TREDO ENGINEERS
755 SENECA STREET, BUFFALO, NY 14210
(716)716.876.7147)

REGISTERED ARCHITECT
ANDREW E. STRANG
019747
STATE OF NEW YORK

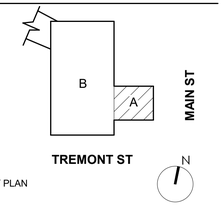

KEY PLAN

RIVIERA THEATRE AND ORGAN PRESERVATION SOCIETY

RIVIERA THEATRE GREEN ROOM

67 WEBSTER ST.
NORTH TONAWANDA, NY
14120

REV. #	DESCRIPTION	DATE

JOB NO.	2545
SCALE	As indicated
ISSUE DATE	10/21/2026
DRAWN BY	XXX
CHECKED BY	XXX

THIS IS A SINGLE SHEET OF A COHESIVE SET OF CONSTRUCTION DOCUMENTS (INCLUDING DRAWINGS AND SPECIFICATIONS). INTERPRETATION OF THE INFORMATION AS PRESENTED SHOULD BE BASED ON THE ENTIRE SET OF DOCUMENTS.

DRAWING TITLE

INTERIOR ELEVATIONS

A-610

100% CONSTRUCTION DOCUMENTS

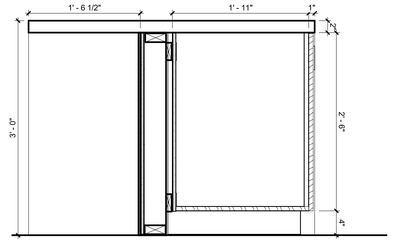

9 A-615 KITCHEN ISLAND SECTION
1" = 1'-0"

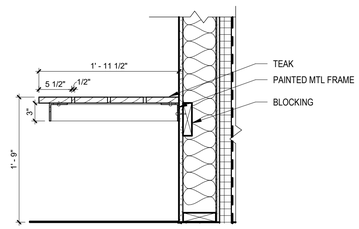

6 A-615 SHOWER BENCH DETAIL
1" = 1'-0"

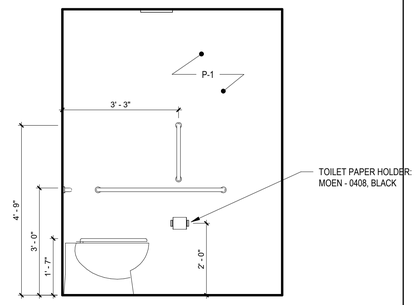

3 A-615 TOILET ROOM ELEVATION WEST
1/2" = 1'-0"

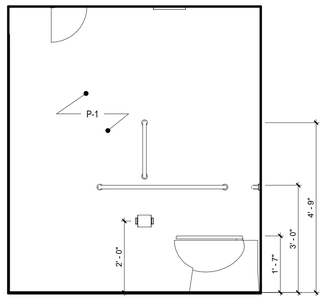

8 A-615 ADA BATHROOM ELEVATION NORTH
1/2" = 1'-0"

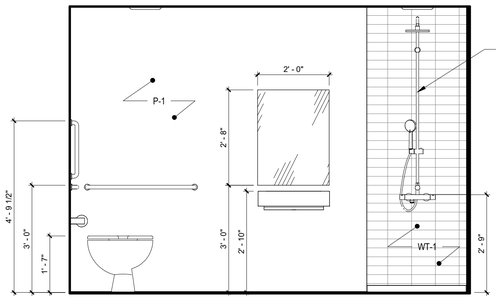

5 A-615 ADA BATHROOM ROOM EAST
1/2" = 1'-0"

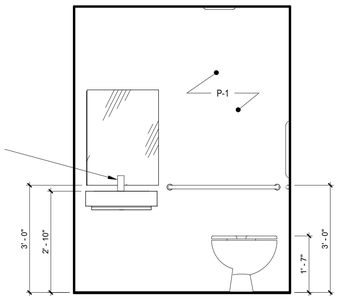

2 A-615 TOILET ROOM ELEVATION SOUTH
1/2" = 1'-0"

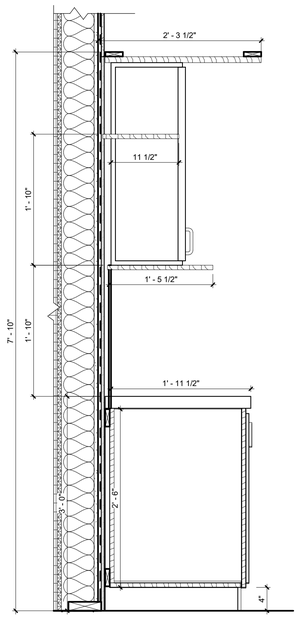

10 A-615 KITCHENETTE MILLWORK SECTION
1" = 1'-0"

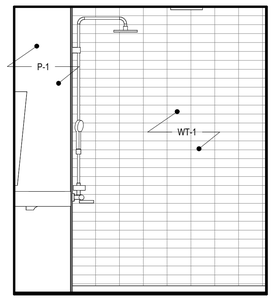

7 A-615 ADA BATHROOM SOUTH
1/2" = 1'-0"

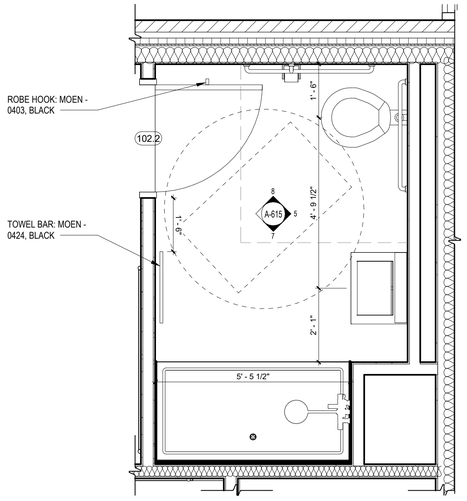

4 A-615 ENLARGED ADA TYP. BATHROOM
1/2" = 1'-0"

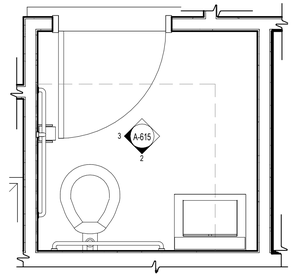

1 A-615 ENLARGED TYP. TOILET ROOM
1/2" = 1'-0"

CJS ARCHITECTS
BUFFALO | ROCHESTER
www.cjsarchitects.com

ARCHITECT
CJS ARCHITECTS
755 SENECA STREET, BUFFALO, NY 14210
(716)716.856.6448

STRUCTURAL ENGINEER
TREDO ENGINEERS
755 SENECA STREET, BUFFALO, NY 14210
(716)716.876.7147)

MEP.FP ENGINEER
BUFFALO ENGINEERING, P.C.
4245UNION ROAD, SUITE 204 BUFFALO, NY 14425
(716.633.5300)

CIVIL ENGINEER
TREDO ENGINEERS
755 SENECA STREET, BUFFALO, NY 14210
(716)716.876.7147)

REGISTERED ARCHITECT
ANDREW E. STAMM
019741
STATE OF NEW YORK

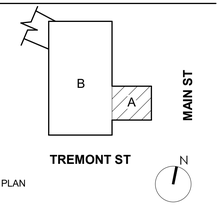

KEY PLAN

RIVIERA THEATRE AND
ORGAN PRESERVATION
SOCIETY

RIVIERA THEATRE GREEN ROOM

67 WEBSTER ST.
NORTH TONAWANDA, NY
14120

REV. #	DESCRIPTION	DATE

JOB NO.	2545
SCALE	As indicated
ISSUE DATE	10/21/2026
DRAWN BY	XXX
CHECKED BY	XXX

THIS IS A SINGLE SHEET OF A COHESIVE
SET OF CONSTRUCTION DOCUMENTS
(INCLUDING DRAWINGS AND SPECIFICATIONS).
INTERPRETATION OF THE INFORMATION
AS PRESENTED SHOULD BE BASED ON
THE ENTIRE SET OF DOCUMENTS.

DRAWING TITLE

TOILET ROOM PLANS AND ELEVATIONS

A-615

100% CONSTRUCTION DOCUMENTS

DOOR SCHEDULE - ALL

DOOR								FRAME			
NO.	WIDTH	HEIGHT	Door Type	Hardware	FINISH	GLASS TYPE	FIRE RATING	TYPE	MATERIAL	FINISH	COMMENTS
GREENROOM FLOOR											
101.1	3' - 0"	7' - 0"	B	3	1	N/A			WD	1	KEYED LOCK
101.2	3' - 0"	7' - 0"	B	2	2	N/A			WD	1	
102.1	3' - 0"	7' - 0"	B	3	1	N/A			WD	1	KEYED LOCK
102.2	3' - 0"	7' - 0"	B	2	2	N/A			WD	1	
103.1	3' - 0"	7' - 0"	B	3	1	N/A			WD	1	KEYED LOCK
103.2	3' - 0"	7' - 0"	B	2	2	N/A			WD	1	
103.3	3' - 0"	7' - 0"	B	2	2	N/A			WD	1	
104.1	3' - 0"	7' - 0"	B	3	1	N/A			WD	1	KEYED LOCK
104.2	3' - 0"	7' - 0"	B	2	2	N/A			WD	1	
104.3	3' - 0"	7' - 0"	B	2	2	N/A			WD	1	
105A	3' - 0"	7' - 0"	C	5	1	N/A	-		WD	1	POCKET DOOR
105B	3' - 0"	7' - 0"	C	5	1	N/A	-	-	WD	1	POCKET DOOR
106.1	3' - 0"	7' - 0"	A	1	1	GL-2			MTL	1	KEY FOB AND COMBO ACCES. SIDELIGHT, FROSTED SECURITY GLASS
106.2	3' - 0"	7' - 0"	B	1	1	N/A			MTL	1	KEY FOB AND COMBO LOCK ACCESS
107.1	10' - 0"	14' - 0"	E			N/A			MTL		INSULATED COMMERICAL SHEET DOOR
107.2	3' - 0"	7' - 0"	B	1	1	N/A			MTL	1	KEY FOB AND COMBO LOCK ACCESS
107.3	6' - 0"	7' - 0"	D	1	1	N/A			MTL	1	KEY FOB AND COMBO LOCK ACCESS
G-01	3' - 0"	5' - 8"									PRIVACY FENCE DOOR W/ PANIC BAR, SEE 1/A-200 FOR BASIS OF DESIGN

DOOR/ FRAME FINISH LEGEND

1 PRIMED AND PAINTED - COLOR BY ARCHITECT
2 STAIN AND CLEAR COAT - FINISH BY ARCHITECT

GLAZING TYPES

GL-1 FLOAT GLASS
GL-2 FROSTED TEMPERED SAFETY GLASS

DOOR MATERIAL TYPES

CWD COMPOSITE WOOD
HM HOLLOW METAL
SWD SOLID WOOD
MWD ALUM. METAL CLAD SOLID WOOD

GENERAL DOOR/ FRAME/ HARDWARE NOTES

1. HARDWARE MFR AND PRODUCTS TBD- REFER TO HARDWARE TYPE AND CORRESPONDING HEADING IN SPEC. SECTION 087100- 'DOOR HARDWARE' FOR GENERAL DESCRIPTION OF HARDWARE FUNCTION AND COMPONENTS. SUCCESSFUL BIDDER ON DOOR HARDWARE SCOPE OF WORK TO SUBMIT HARDWARE SETS AND PRODUCT DATA FOR REVIEW AND APPROVAL BY ARCHITECT, OWNER AND CONSTRUCTION MANAGER.
2. ALL HARDWARE TO BE ADA & BCNYS COMPLIANT.
3. ALL FIRE RATED DOORS TO BE ADEQUATELY SMOKE SEALED PER BCNYS REQUIREMENTS.
4. ALL FIRE RATED DOORS TO BE SELF CLOSING/ LATCHING.
5. ALL DOORS INDICATED TO RECEIVE CARD READERS ARE TO BE TIED INTO THE FIRE ALARM SYSTEM & TO BE UNLOCKED UPON A FIRE ALARM SCENARIO.
6. PROVIDE MAGNETIC HOLD OPENS TIED INTO FIRE ALARM, DOOR TO CLOSE UPON ACTIVATION OF ALARM.
7. DOORS SERVING EGRESS FROM ANY SPACE SHALL NOT LOCK OR PREVENT EXITING FROM THE BUILDING.
8. ALL GLAZING WITHIN 'HAZARDOUS LOCATIONS' REQUIRE SAFETY GLAZING.

DOOR HARDWARE SETS

SET #	DESCRIPTION	COMPONENTS (PER DOOR LEAF)	QUANTITY
1.	ENTRY DOORS	HINGES	3
		MORTISE LOCKSET	1
		CONTINUOUS SEAL	NA
		MORTISE DROPDOWN SWEEP	NA
		JAMB MOUNT CLOSER	1
		DOOR STOP	1
2.	PASSAGE	HINGES	3
		PASSAGE LOCKSET	1
		DOOR SILENCER	3
		DOOR STOP	1
3.	PRIVACY	HINGES	3
		PASSAGE LOCKSET	1
		DOOR SILENCER	3
		DOOR STOP	1
4.	FENCE GATE DOOR	STANDARD GATE HARDWARE	1
		PANIC BAR	1
		DOOR CLOSER	1
5.	POCKET DOOR	STANDARD SLIDING DOOR HARDWARE	

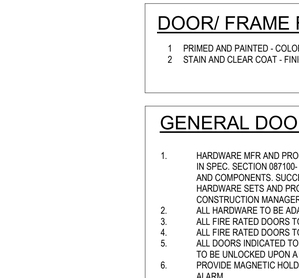

9 A-801 AL. DOOR THRESHOLD DETAIL
3" = 1'-0"

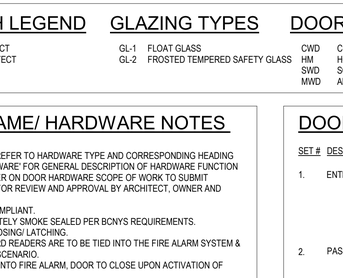

8 A-801 WD DOOR THRESHOLD DETAIL
3" = 1'-0"

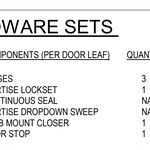

7 A-801 WD DOOR JAMB DETAIL
1 1/2" = 1'-0"

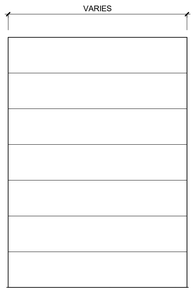

5 A-801 DOOR TYPE E
1/4" = 1'-0"

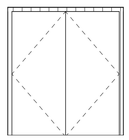

4 A-801 DOOR TYPE D
1/4" = 1'-0"



3 A-801 DOOR TYPE C
1/4" = 1'-0"

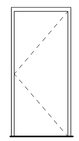

2 A-801 DOOR TYPE B
1/4" = 1'-0"

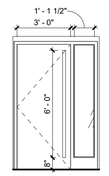

1 A-801 DOOR TYPE A
1/4" = 1'-0"

CJS ARCHITECTS
BUFFALO | ROCHESTER
www.cjsarchitects.com

ARCHITECT
CJS ARCHITECTS
755 SENECA STREET, BUFFALO, NY 14210
(716)716.856.6448)

STRUCTURAL ENGINEER
TREDO ENGINEERS
755 SENECA STREET, BUFFALO, NY 14210
(716)716.876.7147)

MEP.FP ENGINEER
BUFFALO ENGINEERING, P.C.
4245UNION ROAD, SUITE 204 BUFFALO, NY 14425
(716.633.5300)

CIVIL ENGINEER
TREDO ENGINEERS
755 SENECA STREET, BUFFALO, NY 14210
(716)716.876.7147)



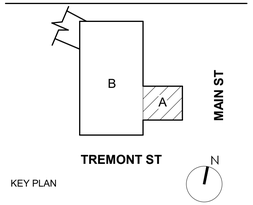

KEY PLAN

RIVIERA THEATRE AND ORGAN PRESERVATION SOCIETY

RIVIERA THEATRE GREEN ROOM

67 WEBSTER ST.
NORTH TONAWANDA, NY
14120

REV. #	DESCRIPTION	DATE

JOB NO.	2545
SCALE	As indicated
ISSUE DATE	10/21/2026
DRAWN BY	MG
CHECKED BY	JMC

THIS IS A SINGLE SHEET OF A COHESIVE SET OF CONSTRUCTION DOCUMENTS (INCLUDING DRAWINGS AND SPECIFICATIONS). INTERPRETATION OF THE INFORMATION AS PRESENTED SHOULD BE BASED ON THE ENTIRE SET OF DOCUMENTS.

DRAWING TITLE

DOOR SCHEDULE

A-801

100% CONSTRUCTION DOCUMENTS

MECHANICAL SYMBOL LEGEND

- NEW DUCTWORK (WIDTH x DEPTH) — 12x6
- NEW DUCTWORK (ROUND DUCT) — 8"Ø
- SUPPLY DUCT UP
- SUPPLY DUCT DOWN
- SUPPLY DUCT UP THROUGH FLOOR ABOVE
- RETURN/EXHAUST/RELIEF DUCT UP
- RETURN/EXHAUST/RELIEF DUCT DOWN
- RETURN/EXHAUST/RELIEF DUCT UP THROUGH FLOOR ABOVE
- MANUAL VOLUME DAMPER
- MOTORIZED DAMPER — M
- FIRE DAMPER W/ACCESS PANEL — FD
- SMOKE DAMPER W/ACCESS PANEL — SD
- COMBINATION FIRE/SMOKE DAMPER W/ACCESS PANEL — FSD
- DUCT RISE (OR DROP) — UP(OR DN)
- THERMOSTAT — T
- TEMPERATURE SENSOR (NEW) — S
- SUPPLY/OUTDOOR AIRFLOW DIRECTION
- RETURN/EXHAUST AIRFLOW DIRECTION

ABBREVIATIONS

AFF	ABOVE FINISHED FLOOR	HZ	HERTZ
AMP	AMPERE	ID	INSIDE DIAMETER
AP	ACCESS PANEL	INV	INVERT
BTU	BRITISH THERMAL UNIT	KW	KILOWATT
CBV	CIRCUIT BALANCING VALVE	LAT	LEAVING AIR TEMPERATURE
CFH	CUBIC FEET PER HOUR	LBS	POUNDS
CFM	CUBIC FEET PER MINUTE	LWB	LEAVING WET BULB
CHW	CIRCULATING HOT WATER	LWT	LEAVING WATER TEMPERATURE
CHWR	CHILLED WATER RETURN	MA	MIXED AIR
CHWS	CHILLED WATER SUPPLY	MAX	MAXIMUM
CLG	CEILING	MBH	THOUSAND BTU'S/HR
CO	CLEANOUT	MIN	MINIMUM
CR	CONDENSATE RETURN	MISC	MISCELLANEOUS
CW	COLD WATER	NA	NOT APPLICABLE
D	DAMPER	NC	NOISE CRITERIA
DB	DECIBEL	NIC	NOT IN CONTRACT
DEMO	DEMOLITION	NTS	NOT TO SCALE
DIA	DIAMETER	OA	OUTSIDE AIR
DIFF	DIFFUSER	OBD	OPPOSED BLADE DAMPER
DTS	DUCT TEMPERATURE SENSOR	O.E.D.	OPEN END DUCT
DWG	DRAWING	PH	PHASE (ELECTRICAL)
DX	DIRECT EXPANSION	PVC	POLYVINYL CHLORIDE
EAT	ENTERING AIR TEMPERATURE	RA	RETURN AIR
EF	EXHAUST FAN	REC	RECESSED
ELEC	ELECTRICAL	REL	RELIEF
ELEV	ELEVATION	RH	RELATIVE HUMIDITY
EMS	ENERGY MANAGEMENT SYSTEM	RM	ROOM
ESP	EXTERNAL STATIC PRESSURE	RPM	REVOLUTIONS PER MINUTE
EWB	ENTERING WET BULB	RTU	ROOFTOP UNIT
EWT	ENTERING WATER TEMPERATURE	SA	SUPPLY AIR
EXH	EXHAUST	SAN	SANITARY
EX	EXISTING	SD	SMOKE DETECTOR
F	FAHRENHEIT	SF	SQUARE FEET
FCO	FLOOR CLEANOUT	SP	STATIC PRESSURE
FD	FIRE DAMPER	SPEC	SPECIFICATION
FD	FLOOR DRAIN	STD	STANDARD
FFE	FINISHED FLOOR ELEVATION	TD	TEMPERATURE DIFFERENCE
FLR	FLOOR	TSP	TOTAL STATIC PRESSURE
FPM	FEET PER MINUTE	TYP	TYPICAL
F/SD	COMBINATION FIRE/SMOKE DAMPER	V	VOLTS
FT	FOOT OR FEET	VFD	VARIABLE FREQUENCY DRIVE
GA	GAGE OR GAUGE	VSD	VARIABLE SPEED DRIVE
GAL	GALLONS	VOL	VOLUME
GC	GENERAL CONTRACTOR	VTR	VENT THROUGH ROOF
GPH	GALLONS PER HOUR	W	WATTS
HP	HORSEPOWER	W/	WITH
HP	HEAT PUMP	W/O	WITHOUT
HT	HEIGHT	WC	WATER CLOSET
HVAC	HEATING, VENTILATING, AIR CONDITIONING	WCO	WALL CLEANOUT
HW	HOT WATER	WT	WEIGHT

AIR TERMINAL LEGEND

- E — EXISTING AIR TERMINAL TO REMAIN IN EXISTING CEILING.
- R — EXISTING AIR TERMINAL INSTALLED IN NEW LOCATION (RELOCATED)
- EXISTING AIR TERMINAL TO BE REMOVED AND SET ASIDE
- NEW AIR TERMINAL

PACKAGED ROOFTOP UNIT SCHEDULE (RTU)

UNIT No.	MANUFACTURER	MODEL No.	FAN SECTION					HEATING SECTION (ELECTRIC)		COOLING SECTION (DX)			ELECTRICAL			OPERATING WEIGHT (LBS)	REMARKS
			NET TONS NOM.	SUPPLY AIR (CFM)	OUTSIDE AIR MIN. (CFM)	ESP ("WC)	SA FAN MOTOR (HP)	INPUT (KW)	STAGES	TOTAL (MBH)	SENSIBLE (MBH)	EER	POWER	MCA	MFS		
RTU-1	TRANE	WSK0604S0K	5.0	2000	300	1.0	1	27	2	60.5	-	12	460-3-60	60	60A	850	1,2,3,4,5,6,7, 8,9

NOTES:
1. PROVIDE MANUFACTURER'S ROOF CURB.
2. PROVIDE ELECTRICAL DISCONNECT.
3. PROVIDE WITH 120V POWERED CONVENIENCE OUTLET.
4. PROVIDE 2" FILTERS, MIN. MERV-13
5. PROVIDE THROUGH THE BASE ELECTRICAL CONNECTION.
6. PROVIDE MANUFACTURER'S 7-DAY PROGRAMMABLE THERMOSTAT.
7. PROVIDE FULL ENTHALPY ECONOMIZER.
8. PROVIDE DUCT MOUNTED SMOKE DETECTORS.
9. 454B REFRIGERANT.

AIR TERMINAL SCHEDULE

UNIT TAG	SERVICE	SIZE	TYPE	"PRICE" MODEL No.	DESCRIPTION	SYMBOL
SD1	SUPPLY	24x24	STEEL SQUARE SUPPLY DIFFUSER	SCD	FURNISH AND INSTALL "PRICE" MODEL "SCD" STEEL SQUARE CEILING DIFFUSERS OF THE SIZE AND AIRFLOW'S INDICATED ON THE PLANS. DIFFUSERS SHALL CONSIST OF PRECISION FORMED BACK CONE OF ONE PIECE SEAMLESS CONSTRUCTION WHICH INCORPORATES A ROUND INLET COLLAR OF SUFFICIENT LENGTH FOR CONNECTING RIGID OR FLEX DUCT. AN INNER CONE ASSEMBLY SHALL CONSIST OF 3 CONES WHICH DROP BELOW THE DIFFUSER. FINISH SHALL BE B12 POWDER COAT.	
SD2	SUPPLY	12x12	STEEL SQUARE SUPPLY DIFFUSER	SCD	FURNISH AND INSTALL "PRICE" MODEL "SCD" STEEL SQUARE CEILING DIFFUSERS OF THE SIZE AND AIRFLOW'S INDICATED ON THE PLANS. DIFFUSERS SHALL CONSIST OF PRECISION FORMED BACK CONE OF ONE PIECE SEAMLESS CONSTRUCTION WHICH INCORPORATES A ROUND INLET COLLAR OF SUFFICIENT LENGTH FOR CONNECTING RIGID OR FLEX DUCT. AN INNER CONE ASSEMBLY SHALL CONSIST OF 3 CONES WHICH DROP BELOW THE DIFFUSER. FINISH SHALL BE B12 POWDER COAT.	
RR1	RETURN/ EXHAUST	SIZE INDICATED ON PLANS	STEEL EXHAUST REGISTER	535D	FURNISH AND INSTALL "PRICE" MODEL "535D" EXHAUST REGISTERS FOR FOR THE SIZES AND MOUNTING TYPES INDICATED ON THE PLANS. REGISTERS SHALL BE LOUVERED BLADE SPACED 1/2" ON CENTER. THE INTEGRAL VOLUME CONTROL DAMPER SHALL BE OF THE OPPOSED TYPE. THE DAMPER SHALL BE OPERABLE FROM THE REGISTER FACE. FINISH SHALL BE B12 POWDER COAT	

NOTES:
1. ALL AIR TERMINAL FINISHES AND COLORS SELECTED BY ARCHITECT.

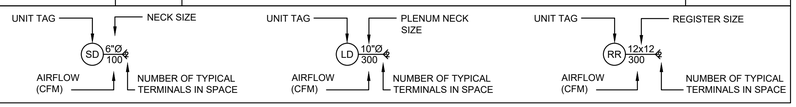

EXHAUST FAN SCHEDULE (EF)

UNIT No.	MANUFACTURER	MODEL No.	TYPE	AREA SERVED	AIRFLOW (CFM)	ESP ("W.C.)	DRIVE	ELECTRICAL		SONES	WEIGHT (LBS)	REMARKS
								POWER	HP			
EF-1	GREENHECK	VG-060-1/10	CEILING	RESTROOM	75	0.40	DIRECT	115-1-60	1/10	4.4	15	1 THRU 4

NOTES:
1. PROVIDE VARI-GREEN ECM FAN MOTOR.
2. PROVIDE ELECTRICAL DISCONNECT.
3. PROVIDE BACK-DRAFT DAMPER.
4. PROVIDE CONTROLLED BY WALL SWITCH.

HOT WATER BOILER SCHEDULE (B)

UNIT NO.	MANUFACTURER	MODEL No.	TYPE	TEMPERATURE RISE (°F)	FLOW RATE (GPM)	PRESSURE DROP (FT)	SYSTEM MEDIA	OUTPUT (MBH)	GAS INPUT RATE (MBH)	GAS PRESSURE RANGE (" W.C.)	TURNDOWN	WATER VOLUME (GAL)	GAS PIPING CONNECTIONS	RELIEF VALVE SETPOINT (PSI)	FLA	MCA	MOP	POWER (V/Ph/Hz)	OPERATING WEIGHT (LBS)	NOTES
B-1	LOCHINVAR	WHB199N	CONDENSING	20.0	15	13.3	30% PG	184	199	3.0-14.0	10:1	-	1/2" NPT	75.0	2.2	2.8	15	120 / 1 / 60	175	1,2,3,4,5,6,7

NOTES:
1. PROVIDE ECM VARIABLE SPEED BOILER CIRCULATING PUMP.
2. PROVIDE SMART SYSTEM CONTROLS.
3. PROVIDE CONDENSATE TRAP AND CONDENSATE NEUTRALIZATION KIT.
4. PROVIDE SUPPLY AND RETURN WATER TEMPERATURE SENSORS.
5. PROVIDE STAINLESS STEEL HEAT EXCHANGER.
6. PROVIDE PROVIDE ASME RATED.
7. PROVIDE CONCENTRIC HORIZONTAL DISCHARGE KIT.

ELECTRIC WALL HEATER SCHEDULE (EWH)

UNIT No.	"MARKEL" MODEL No.	AREA SERVED	TYPE	CFM	KW	AMPS	POWER	NOTES
EWH-1	E3323TD-RP	STAIR STB0	FAN FORCED	175	1.5	12.5	120/1/60	1,2,3

NOTES:
1. PROVIDE WITH FACTORY INSTALLED INTEGRAL DISCONNECT SWITCH.
2. PROVIDE WITH INTEGRAL TAMPER PROOF THERMOSTAT.
3. PROVIDE WITH HEAVY DUTY STEEL TAMPER PROOF GRILLE.

PUMP SCHEDULE (P)

UNIT No.	'GRUNDFOS' MODEL No.	SERVICE	LOCATION	TYPE	FLOW (GPM)	WPD (FT H20)	PIPING CONNECTIONS	ELECTRICAL				NOTES
								POWER	MAX HP	MCA	MOCP	
BP-1	UPS32-60	B-1	LOADING	INLINE	42.0	20.0	1-1/2"	115-60-1	3/4	5.8	15	1,2

NOTES:
1. PROVIDE INTEGRAL ECM DRIVE.
2. PROVIDE WITH CAST IRON FLANGES.

SNOW MELT HEATING ZONE SCHEDULE

ZONE	AREA (FT2)	TUB SIZE	CIRCUIT LENGTH (FT)	No. OF CIRCUITS	PIPE SPACING	GPM	HEAD (FT H20)	SUPPLY/RETURN FLUID TEMP (°F)	REQUIRED HEAT (MBH)	NOTES
M-1	788	3/4"	256	4	9"	11.65	8.0	139 / 114	182.6	1,2

NOTES:
1. PROVIDE WITH CABLE TIES.
2. PROVIDE UPONOR A2740402 STAINLESS-STEEL MANIFOLD ASSEMBLY, 1-1/2" WITH FLOW METER, B&I, BALL VALVES, 4 LOOPS.
3. PROVIDE PIPING MANIFOLD WITH SERVICE VALVES AND REMOVABLE ACCESS PANEL.

CJS ARCHITECTS
BUFFALO | ROCHESTER
www.cjsarchitects.com

ARCHITECT
CJS ARCHITECTS
755 SENECA STREET, BUFFALO, NY 14210
(716)716.856.6448)

STRUCTURAL ENGINEER
TREDO ENGINEERS
755 SENECA STREET, BUFFALO, NY 14210
(716)716.876.7147)

MEP.FP ENGINEER
BUFFALO ENGINEERING, P.C.
4245UNION ROAD, SUITE 204 BUFFALO, NY 14425
(716.633.5300)

CIVIL ENGINEER
TREDO ENGINEERS
755 SENECA STREET, BUFFALO, NY 14210
(716)716.876.7147)

STATE OF NEW YORK — BRIAN P. ZINTEL — 089670 — LICENSED PROFESSIONAL ENGINEER

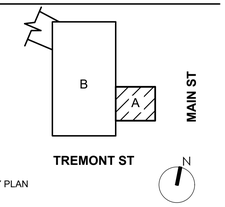

KEY PLAN

RIVIERA THEATRE AND ORGAN PRESERVATION SOCIETY

RIVIERA THEATRE GREEN ROOM

67 WEBSTER ST.
NORTH TONAWANDA, NY
14210

REV. #	DESCRIPTION	DATE

JOB NO.	2545
SCALE	AS NOTED
ISSUE DATE	10/21/2026
DRAWN BY	JRA
CHECKED BY	BPZ

THIS IS A SINGLE SHEET OF A COHESIVE SET OF CONSTRUCTION DOCUMENTS (INCLUDING DRAWINGS AND SPECIFICATIONS). INTERPRETATION OF THE INFORMATION AS PRESENTED SHOULD BE BASED ON THE ENTIRE SET OF DOCUMENTS.

DRAWING TITLE

MECHANICAL SCHEDULES

M-001

100% CONSTRUCTION DOCUMENTS

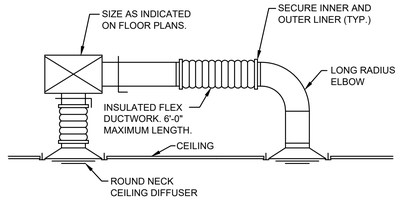

1 TYPICAL DIFFUSER INSTALLATION DETAIL
SCALE: NTS

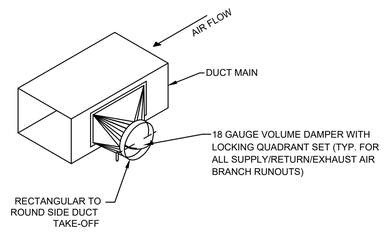

2 TYPICAL BRANCH DUCT CONNECTION DETAIL
SCALE: NTS

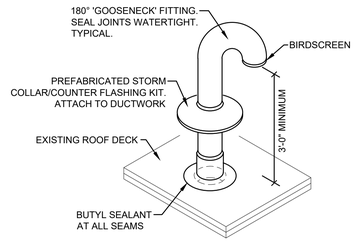

3 GOOSENECK TERMINATION DETAIL
SCALE: NTS

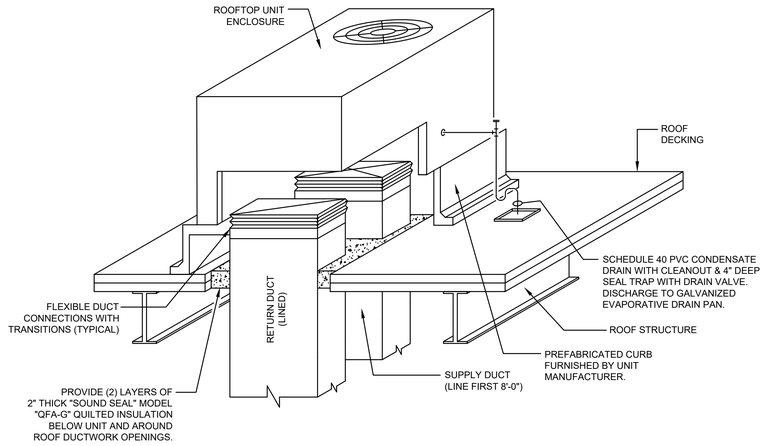

5 ROOFTOP UNIT INSTALLATION DETAIL
SCALE: N.T.S.

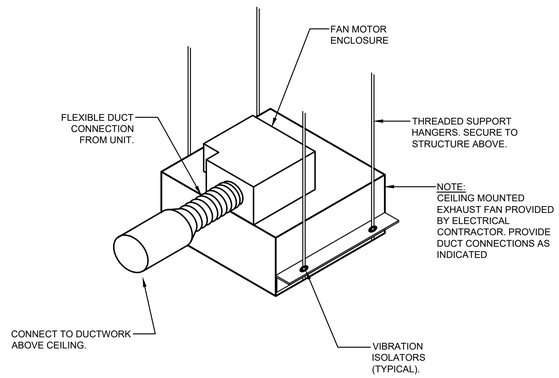

6 CEILING MOUNTED EXHAUST FAN DETAIL
SCALE: NTS

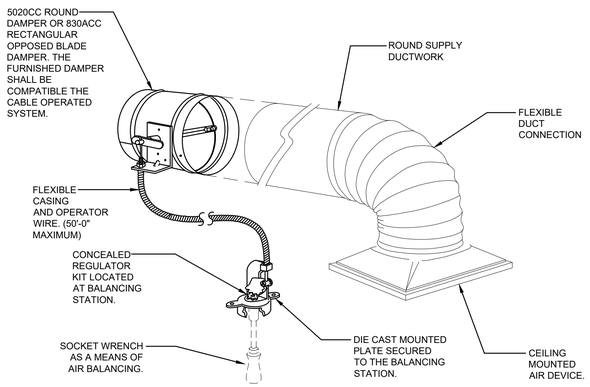

NOTE: COORDINATE EXACT LOCATIONS OF CEILING MOUNTED CONCEALED REGULATORS WITH THE ARCHITECT PRIOR TO INSTALLATION. THE BALANCING STATION SHALL BE INSTALLED ABOVE THE FINISHED CEILING. INSTALL "YOUNG REGULATOR COMPANY" CABLE OPERATED DAMPER SYSTEM OR EQUIVALENT AS APPROVED BY THE ENGINEER. THE CABLE OPERATED DAMPER SYSTEM SHALL BE INSTALLED IN LOCATIONS WHERE BRANCH DUCT DAMPERS ARE INACCESSIBLE. COORDINATE LOCATIONS WITH THE ARCHITECTURAL RCP'S.

7 CABLE OPERATED DAMPER INSTALLATION DETAIL
SCALE: N.T.S.

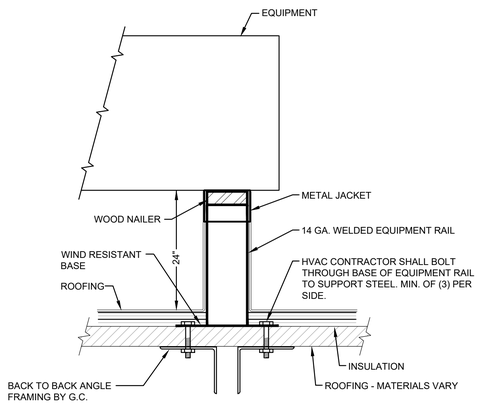

8 EQUIPMENT RAIL INSTALLATION DETAIL
SCALE: N.T.S.

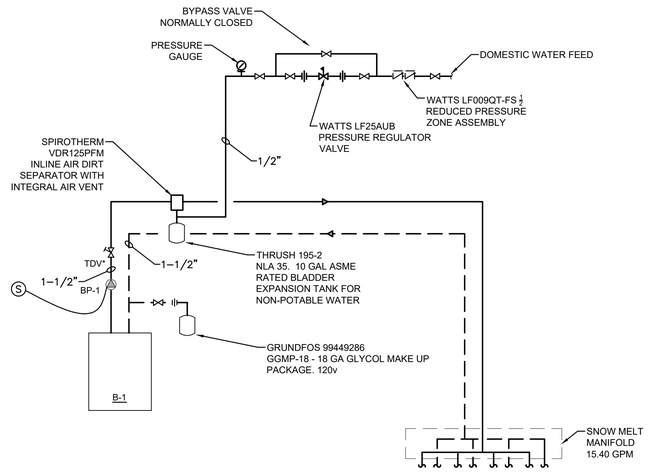

9 BOILER AND SNOW MELT PIPING DETAIL
SCALE: N.T.S.

CJS ARCHITECTS
BUFFALO | ROCHESTER
www.cjsarchitects.com

ARCHITECT
CJS ARCHITECTS
755 SENECA STREET, BUFFALO, NY 14210
(716)716.856.6448

STRUCTURAL ENGINEER
TREDO ENGINEERS
755 SENECA STREET, BUFFALO, NY 14210
(716)716.876.7147

MEP.FP ENGINEER
BUFFALO ENGINEERING, P.C.
4245UNION ROAD, SUITE 204 BUFFALO, NY 14425
(716.633.5300)

CIVIL ENGINEER
TREDO ENGINEERS
755 SENECA STREET, BUFFALO, NY 14210
(716)716.876.7147

STATE OF NEW YORK
BRIAN P. ZINTEL
090670
LICENSED PROFESSIONAL ENGINEER

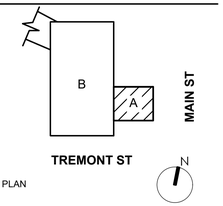

KEY PLAN

RIVIERA THEATRE AND ORGAN PRESERVATION SOCIETY

RIVIERA THEATRE GREEN ROOM

67 WEBSTER ST.
NORTH TONAWANDA, NY
14210

REV. #	DESCRIPTION	DATE

JOB NO.	2545
SCALE	AS NOTED
ISSUE DATE	10/21/2026
DRAWN BY	JRA
CHECKED BY	BPZ

THIS IS A SINGLE SHEET OF A COHESIVE SET OF CONSTRUCTION DOCUMENTS (INCLUDING DRAWINGS AND SPECIFICATIONS). INTERPRETATION OF THE INFORMATION AS PRESENTED SHOULD BE BASED ON THE ENTIRE SET OF DOCUMENTS.

DRAWING TITLE

MECHANICAL DETAILS

M-002

100% CONSTRUCTION DOCUMENTS

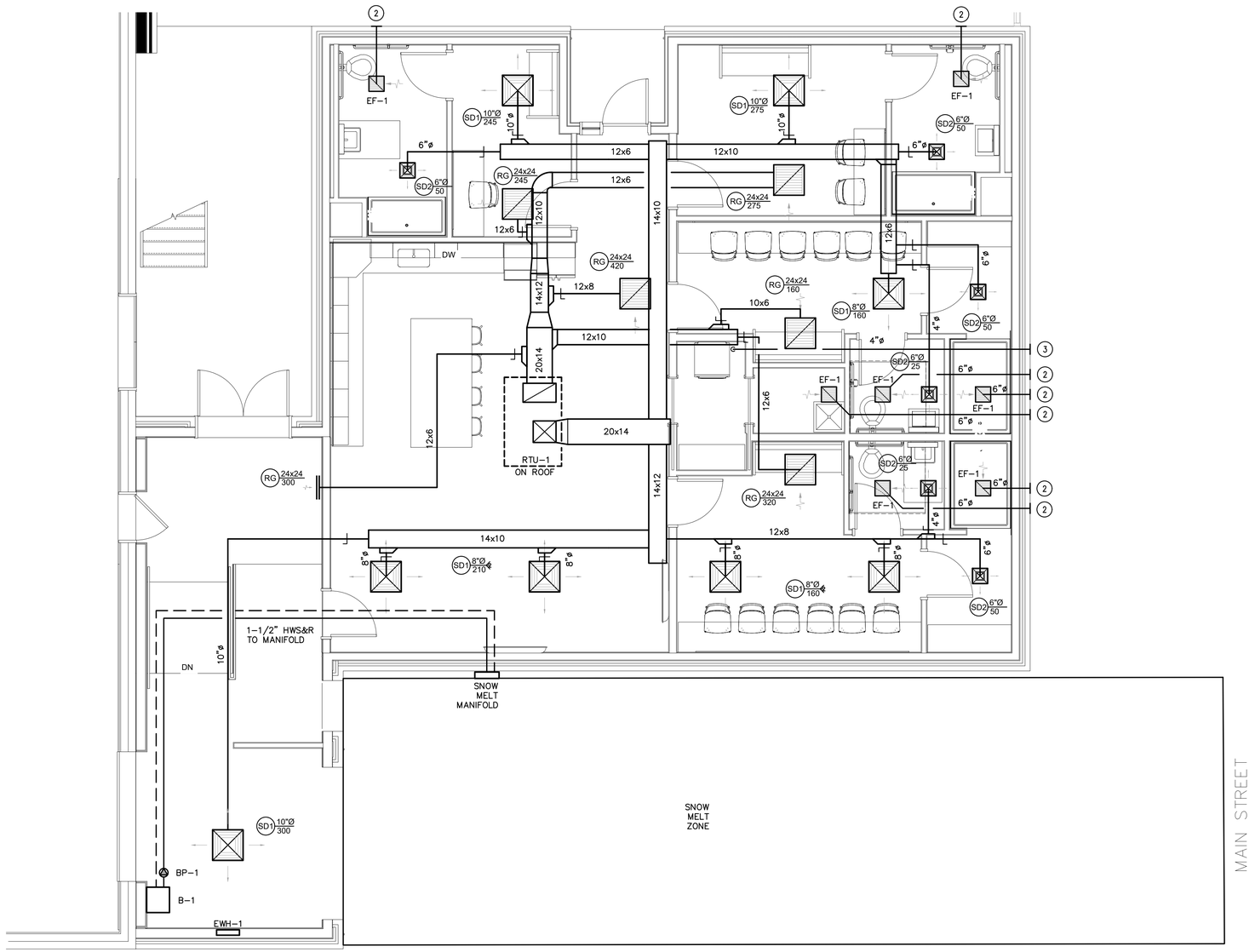

1 FIRST FLOOR MECHANICAL PLAN – NEW WORK
SCALE: 1/4"=1'

GENERAL PLAN NOTES

THESE DRAWINGS ARE DIAGRAMMATIC IN NATURE AND INDICATE THE SIZE AND GENERAL ARRANGEMENT OF PIPING, DUCTWORK, EQUIPMENT, ETC. EXACT LOCATIONS AND ROUTINGS SHALL BE DETERMINED IN THE FIELD BEFORE AND AS THE WORK PROGRESSES. CAREFULLY COORDINATE THE WORK OF THIS TRADE WITH ALL OTHER TRADES.

DRAWINGS DO NOT INDICATE ALL OFFSETS, CHANGES IN ELEVATION, ETC. WHICH MAY BE REQUIRED BY ACTUAL FIELD CONDITIONS. THE CONTRACTOR IS TO FIELD VERIFY CONDITIONS PRIOR TO INSTALLATION AND MAKE SUCH CHANGES IN PIPING, DUCTWORK, EQUIPMENT LOCATIONS, ETC. AS NECESSARY TO ACCOMMODATE FIELD CONDITIONS. COORDINATE ALL CHANGES WITH OTHER TRADES AND ARCHITECT/ENGINEER.

ALL CUTTING AND PATCHING OF BUILDING COMPONENTS REQUIRED TO ACCOMMODATE THE WORK OF THIS CONTRACT SHALL BE THE RESPONSIBILITY OF THIS CONTRACT. ALL PATCHING SHALL MATCH THE EXISTING COMPONENTS AND FINISHES. CUTTING AND PATCHING WORK SHALL BE PERFORMED BY PERSONNEL TRAINED AND REGULARLY EMPLOYED FOR SUCH SERVICES.

INSTALL ALL PIPING, DUCTWORK, EQUIPMENT, ETC. TO AVOID INTERFERENCE WITH THE OPERATION AND SERVICING OF ALL EQUIPMENT. IN GENERAL, DO NOT INSTALL ANYTHING ABOVE OR WITHIN 3 FT. IN FRONT OF ELECTRICAL GEAR.

THE WORK INCLUDED IN THIS CONTRACT ENCOMPASSES BOTH THE DRAWINGS AND SPECIFICATIONS. WORK INCLUDED ON THE DRAWINGS ONLY, OR IN THE SPECIFICATION ONLY, SHALL BE INCORPORATED AS IF INCLUDED IN BOTH. SYSTEMS ARE INTENDED TO BE COMPLETE AND FULLY FUNCTIONING. IT IS NOT INTENDED TO SHOW EVERY ITEM OF WORK OR MINOR PIECE OF EQUIPMENT. THE CONTRACTOR SHALL PROVIDE SUCH COMPONENTS, ETC. AS NECESSARY OR REQUIRED FOR A FULLY FUNCTIONING SYSTEM.

ALL FLEX DUCTS SHALL BE A MAXIMUM OF 5'-0" IN LENGTH. FLEXIBLE DUCT CONNECTIONS ALLOWED ONLY IN AREA'S WITH ACCESIBLE CEILINGS. REFER TO THE ARCHITECTURAL DRAWINGS FOR CEILING TYPES. DUCT CONNECTIONS ABOVE INACCESSIBLE CEILINGS ARE NOT ALLOWED.

ALL EQUIPMENT, PIPING, AND DUCTWORK SUPPORTS AND ANCHORS SHALL HAVE AN IMPORTANCE FACTOR OF 1.5 PER CHAPTER-13 OF THE ASCE 7-16 MINIMUM DESIGN LOADS FOR SEISMIC DESIGN. THE SESMIC DESIGN SHALL MEET THE REQUIREMENTS OF CATEGORY IV WITH A SEISMIC DESIGN CATEGORY "D".

PROVIDE CABLE OPERATED CONTROL DAMPERS FOR ALL DUCTWORK DAMPERS LOCATED ABOVE INACCESSIBLE CEILINGS.

DRAWING NOTES : (#)

1. SUPPLY AND RETURN DUCTS DOWN FROM RTU ON ROOF.
2. EXHAUST DUCT THROUGH WALL. TERMINATE WITH WALL CAP. MAINTAIN A MINIMUM OF 10' SEPARATION FROM OUTSIDE AIR INTAKES.
3. DRYER EXHAUST. TERMINATE AT WALL CAP.

CJS ARCHITECTS
BUFFALO | ROCHESTER
www.cjsarchitects.com

ARCHITECT
CJS ARCHITECTS
755 SENECA STREET, BUFFALO, NY 14210
(716)716.856.6448)

STRUCTURAL ENGINEER
TREDO ENGINEERS
755 SENECA STREET, BUFFALO, NY 14210
(716)716.876.7147)

MEP.FP ENGINEER
BUFFALO ENGINEERING, P.C.
4245UNION ROAD, SUITE 204 BUFFALO, NY 14425
(716.633.5300)

CIVIL ENGINEER
TREDO ENGINEERS
755 SENECA STREET, BUFFALO, NY 14210
(716)716.876.7147)

STATE OF NEW YORK
BRIAN P. ZINTEL
099679
LICENSED PROFESSIONAL ENGINEER

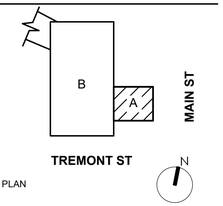

KEY PLAN

RIVIERA THEATRE AND
ORGAN PRESERVATION
SOCIETY

RIVIERA THEATRE GREEN ROOM

67 WEBSTER ST.
NORTH TONAWANDA, NY
14210

REV. #	DESCRIPTION	DATE

JOB NO.	2545
SCALE	AS NOTED
ISSUE DATE	10/21/2026
DRAWN BY	JRA
CHECKED BY	BPZ

THIS IS A SINGLE SHEET OF A COHESIVE SET OF CONSTRUCTION DOCUMENTS (INCLUDING DRAWINGS AND SPECIFICATIONS). INTERPRETATION OF THE INFORMATION AS PRESENTED SHOULD BE BASED ON THE ENTIRE SET OF DOCUMENTS.

DRAWING TITLE

GROUND LEVEL MECHANICAL PLAN

M-100

100% CONSTRUCTION DOCUMENTS

MECHANICAL SPECIFICATIONS

GENERAL REQUIREMENTS:
THE CONTRACTOR SHALL OBTAIN, FROM THE AUTHORITY OR AGENCY HAVING JURISDICTION, ALL NECESSARY PERMITS FOR THE INSTALLATION OF ALL MATERIALS AND WORK UNDER THIS CONTRACT AND SHALL PAY ALL FEES REQUIRED FOR OBTAINING OF SUCH PERMITS.

ALL CUTTING, FITTING, PATCHING AND REFINISHING REQUIRED FOR WORK UNDER THIS CONTRACT SHALL BE PERFORMED BY WORKMEN SKILLED IN THE RESPECTIVE TRADES AND INCLUDE PRICE OF SAME IN THE HVAC PROPOSAL.

ALL WORK SHALL BE PERFORMED AS INDICATED ON DRAWINGS UNLESS FIELD CONDITIONS REQUIRE MINOR CHANGES BE MADE. MINOR CHANGES SHALL BE MADE WITH NO ADDITIONAL COST. COORDINATE THE WORK WITH THE OTHER CONTRACTORS WORKING ON THIS PROJECT. ADJUST THE LOCATION OF THE WORK TO ACCOMMODATE OBSTACLES ENCOUNTERED. RELOCATE OBSTACLES WHERE REQUIRED OR AS DIRECTED BY THE OWNER.

THE CONTRACTOR SHALL CLOSE UP ALL OPENINGS REMAINING AROUND ALL DUCTWORK, CONDUITS, ETC. TO MAINTAIN THE INTEGRITY OF ANY FIRE RATED WALL, CEILING, ETC.

THE CONTRACTOR SHALL VERIFY ALL DIMENSIONS, SIZES AND LOCATIONS OF ALL NEW AND EXISTING DUCTWORK, ETC. PRIOR TO ANY ORDERING, FABRICATING, OR INSTALLING OF ANY MATERIALS OR EQUIPMENT.

THE SYSTEM SHOWN ON THE DRAWINGS AND DESCRIBED IN THESE SPECIFICATIONS HAS BEEN DESIGNED ACCORDING TO ASHRAE FUNDAMENTALS HANDBOOK. THE EQUIPMENT HAS BEEN SELECTED TO COMPLY WITH THE MECHANICAL CODE OF N.Y.S., FUEL GAS CODE OF N.Y.S. AND ENERGY CONSERVATION CONSTRUCTION CODE OF N.Y.S. THE SYSTEMS IN THIS BUILDING SHALL COMPLY WITH CHAPTER 8 OF THE ECCC ACCEPTABLE PRACTICE FOR COMMERCIAL BUILDINGS.

ALL WORK SHALL COMPLY WITH ALL STATE CODES, NATIONAL ELECTRIC CODE, NFPA CODES AND ALL LOCAL CODES THAT APPLY. THESE CODES INCLUDE BUT ARE NOT LIMITED TO MECHANICAL CODE OF N.Y.S., FUEL GAS CODE OF N.Y.S. AND ENERGY CONSERVATION CONSTRUCTION CODE OF N.Y.S.

THE DRAWINGS ARE SCHEMATIC IN INTENT. INSTALL ALL EQUIPMENT AND MATERIALS IN COMPLETE COMPLIANCE WITH MANUFACTURER'S INSTRUCTIONS, APPLICABLE CODES AND ORDINANCES, AND IN A NEAT, WORKMANLIKE MANNER. FIELD INSPECT ALL EXISTING CONDITIONS, AND IDENTIFY ANY OBSTACLES OR INTERFERENCE WHICH MAY INTERFERE WITH THE EXECUTION OF THE WORK. NOTIFY OWNER OF SAME PRIOR TO EXECUTION OF THE WORK, FOR APPROPRIATE RESOLUTION.

EQUIPMENT AND MATERIALS SPECIFIED HEREIN REPRESENT THE MINIMUM QUALITY ACCEPTABLE TO THE OWNER. ACCEPTANCE OF SUBSTITUTIONS PROPOSED BY THE CONTRACTOR IS THE SOLE PRIVILEGE OF THE OWNER. PROPOSALS SHALL BE BASED UPON ALL SPECIFIED EQUIPMENT AND MATERIALS ONLY. ANY SUBSTITUTIONS PROPOSED BY THE CONTRACTOR SHALL BE APPENDED ON HIS PROPOSAL, AND SHALL INCLUDE AN "ADD" OR "DEDUCT" PRICE FOR EACH ITEM. OWNER MAY WITHOUT QUALIFICATION REJECT ANY OR ALL SUBSTITUTIONS.

INSTALL ALL EQUIPMENT IN COMPLETE COMPLIANCE WITH MANUFACTURER'S INSTRUCTIONS, APPLICABLE CODES AND ORDINANCES, AND THE CONTRACT DOCUMENTS.

IDENTIFICATION:
EQUIPMENT NAMEPLATES SHALL INCLUDE MANUFACTURER, PRODUCT NAME, MODEL AND SERIAL NUMBERS, CAPACITY, OPERATING AND POWER CHARACTERISTICS, ESSENTIAL DATA, AND LABELS OF TESTED COMPLIANCES.
DUCT MARKERS SHALL BE ENGRAVED COLOR CODED LAMINATED PLASTIC. INCLUDE DIRECTION OF AIRFLOW AND DUCT SERVICE (e.g. SUPPLY, RETURN, EXHAUST).
PIPING MARKERS SHALL COMPLY WITH ASME A13.1 FOR LOCATION, SIZE, AND COLOR.

DUCTWORK AND ACCESSORIES:

SPIRAL SEAM:
CROSS SECTION: ROUNDS.
MANUFACTURER: UNITED SHEET METAL, LINDAB, PEABODY AND WIND, OR APPROVED EQUAL.
TEST DATA: MANUFACTURER SHALL HAVE CERTIFIED TEST DATA BY INDEPENDENT TESTING LABORATORY
COVERING: LEAKAGE RATE, BURSTING STRENGTH, AND FRICTION LOSS.
ROUND DUCT GAUGES: ROUND DUCT SHALL BE MANUFACTURERED OF GALVANIZED STEEL MEETING ASTM A-527-67 BY THE FOLLOWING METHODS AND THE MINIMUM GAUGES LISTED.

DIAMETER	MINIMUM GAUGE	METHOD OF
3" THROUGH 8"	20 GA.	SPIRAL LOCKSEAM
9" THROUGH 22"	20 GA.	SPIRAL LOCKSEAM

THE SPIRAL DUCT SHALL HAVE LOCKED SEAMS SO MADE AS TO ELIMINATE ANY LEAKAGE UNDER THE PRESSURE FOR WHICH THIS SYSTEM HAS BEEN DESIGNED. LONGITUDINAL SEAM DUCT SHALL HAVE A FUSION-WELDED BUTT SEAM. FITTINGS AND COUPLINGS SHALL BE GAUGE. ALL FITTINGS ARE TO HAVE CONTINUOUS WELDS ALONG SEAMS. ALL DIVIDED FLOW FITTINGS ARE TO BE MANUFACTURED AS SEPARATE FITTINGS, NOT AS TAP COLLARS WELDED INTO SPIRAL DUCT SECTIONS. DUCTS TO BE SEALED BY AN APPROVED SEALER APPLIED TO THE MALE END OF THE COUPLINGS AND FITTINGS. AFTER THE JOINT IS SLIPPED TOGETHER, SHEET METAL SCREWS ARE PLACED 1/2 INCH FROM THE JOINT BEAD FOR MECHANICAL STRENGTH.

TYPE SYSTEM: LOW PRESSURE. ALL DUCTWORK AND FITTINGS, SELECTIONS, APPLICATIONS AND INSTALLATION SHALL BE IN ACCORDANCE WITH "SMANCA" - "HVAC DUCT CONSTRUCTION STANDARDS". CONSTRUCTION: LOW PRESSURE DUCTWORK SHALL BE CONSTRUCTED OF GALVANIZED STEEL SHEETS. DUCTWORK SHALL CONFORM ACCURATELY TO THE DIMENSIONS INDICATED, AND SHALL BE STRAIGHT AND SMOOTH ON THE INSIDE WITH JOINTS NEATLY FINISHED. DUCTS SHALL BE SECURE AND ANCHORED TO THE BUILDING STRUCTURAL COMPONENTS AND FRAMING, AND SHALL BE FABRICATED AND SUPPORTED IN SUCH A MANNER TO PREVENT VIBRATION AND PULSATION UNDER OPERATING CONDITIONS. BUTTON PUNCH OR BOLD CONNECTIONS IN STANDING SEAMS SHALL BE SPACED AT NOT GREATER THAN 6-INCH ON CENTERS. LONGITUDINAL LOCKS OR SEAMS TERMED " BUTTON PUNCH SNAP LOCK" ARE ACCEPTABLE IN LIEU OF PITTSBURG LOCKS. ELBOWS SHALL BE RADIUS TYPE WITH A CENTER RADIUS OF 1-1/2 TIMES THE WIDTH OR DIAMETER OF THE DUCT. WHERE SPACE DOES NOT PERMIT, THE USE, OF SHORT RADIUS ELBOWS HAVING A MINIMUM RADIUS OF 1.0 TIMES THE WIDTH OR DIAMETER OF THE DUCT, OR SQUARE ELBOWS WITH FACTORY FABRICATED TURNING VANES MAY BE USED. ALL DUCT JOINTS AND TRANSVERSE AND LONGITUDINAL SEAMS SHALL BE SEALED WITH A LATEX TYPE DUCT SEALER APPROVED BY THE ENGINEER. FITTINGS: SQUARE ELBOWS, FITTINGS, AND BRANCH TAKE-OFFS SHALL BE DESIGNED AND CONSTRUCTED AS SPECIFIED IN SMACNA. ALL GENERAL VENTILATION ITEMS SHALL COMPLY WITH NFPA BULLETIN 90A. SLEEVED AND FRAMED OPENINGS: SPACE BETWEEN THE SLEEVED OR FRAMED OPENING AND THE DUCT AND THE DUCT INSULATION SHALL BE PACKED WITH MINERAL WOOL OR OTHER APPROVED MATERIAL TO MEET THE REQUIREMENTS OF WALL CONSTRUCTION FOR SMOKE OR FIRE CONTROL.

ACOUSTICAL DUCT LINING:
LOCATION: ALL RETURN AIR DUCTWORK AND AIR TRANSFER DUCTWORK SHALL BE LINED PER MANUFACTURERS REQUIREMENTS.
TYPE: 1" THICK, 1.5LB DENSITY FIBERGLASS DUCT LINER MATERIAL. IN ACCORDANCE WITH FED. SPEC. HH-1-545, TYPES I AND II.
APPLICATION: APPLY WITH RETAINING PIN AND GALVANIZED SHEET METAL DISCS AS PER THE MANUFACTURERS RECOMMENDATIONS. GENERAL DUCT DIMENSIONS INDICATED ON THE DRAWINGS ARE FOR INSIDE CLEAR DIMENSIONS. LININGS IN AIR DUCTS AND EQUIPMENT SHALL MEET THE EROSION TEST METHOD DESCRIBED IN UNDERWRITERS LABORATORIES INC. PUBLICATION NO. 181.

INSULATION - DUCTWORK:
PROVIDE ALL LABOR, MATERIALS, ETC-...REQUIRED TO PRODUCE A COMPLETELY FINISHED INSULATION SYSTEM FOR THE FOLLOWING:
SUPPLY AIR DUCTWORK.
FLAME AND SMOKE RATINGS: PROVIDE COMPOSITE MECHANICAL INSULATION (INSULATION JACKETS, COVERINGS, SEALERS, MASTICS, AND ADHESIVES WITH FLAME SPREAD RATING OF 25 OR LESS, AND SMOKE DEVELOPMENT RATING OF 50 OR LESS, AS TESTED BY ASNSI/ASTM E84 (NFPA 255) METHODS.
SUPPLY DUCT INSULATION:
TYPE: OWENS CORNING, CERTAINTEED, KEENE.
TYPE: BLANKET FIBERGLASS IN CONCEALED AREAS, RIGID TYPE IN EXPOSED AREAS. PROVIDE WITH FIRE RETARDANT JACKET.
APPLICATION: SEAT JOINTS AND LAB WITH VAPOR BARRIER MASTIC AND VAPOR JOINT STRIPS. BLANKET INSULATION ON DUCTS WITH MECHANICAL FASTENERS AT NO MORE THAN 18" O.C. RIGID INSULATION WILL BE IMPALED ON PINS LOCATED NO LESS THAN 12" O.C. THE PINS SHALL BE COVERED WITH BENHAMIN/FOSTER 30-35 MASTIC AND CAPS.
SCHEDULE (UNLESS OTHERWISE NOTED): R-6 FOR SUPPLY DUCTWORK.

FAN POWERED VENTILATORS (EF):

MAKE, MODEL, AND CAPACITY: REFER TO THE SCHEDULE.

BASIS OF DESIGN: GREENHECK

ACCEPTABLE MANUFACTURERS: LOREN COOK, PENN, TWIN CITY

ACCESSORIES: AS INDICATED IN THE SCHEDULES.

CONTROLS: EXHAUST FAN SHALL BE CONTROLLED VIA TIME CLOCK AND SHALL OPERATE CONTINUOUSLY DURING OCCUPIED HOURS. TIME CLOCK AND CONTROL WIRING SHALL BE PROVIDED BY THE ELECTRICAL CONTRACTOR.

AIR TERMINAL DEVICES:

SEE THE SCHEDULES AND FLOOR PLAN FOR AIR DEVICES.

ACCEPTABLE MANUFACTURERS: PRICE, CARNES, TITUS

ADJUSTING, BALANCING, TESTING, AND INSPECTION:

TESTING, BALANCING, AND ADJUSTING:

ALL AIR SYSTEMS SHALL BE BALANCED.

FIELD TESTS: PROPOSED TESTING PROGRAM SHALL BE SUBMITTED TO THE ARCHITECT AT LEAST TWO WEEKS PRIOR TO THE SCHEDULED TEST TO ASSURE AGREEMENT AS TO PERSONAL AND INSTRUMENTATION REQUIRED, AND THE SCOPE OF TESTING PROGRAM. FINAL TEST REPORT SHALL BE ON PREPARED FORMS AND APPROVED BY THE ENGINEER.

VERIFICATION OF DIMENSIONS:

THE CONTRACTOR SHALL BECOME FAMILIAR WITH ALL DETAILS OF THE WORK, VERIFY ALL DIMENSIONS IN THE FIELD, AND SHALL ADVISE THE ARCHITECT OF ANY DISCREPANCY BEFORE PERFORMING WORK.

COORDINATION:

HEATING CONTRACTOR SHALL COORDINATE ALL WORK AND MATERIALS WITH OTHER CONTRACTORS. THIS WORK SHALL INCLUDE, BUT NOT BE LIMITED TO THE FOLLOWING: ELECTRICAL WORK: PROVIDE WIRING DIAGRAMS, MOTOR STARTER RECOMMENDATIONS (INCLUDING: TYPE, SIZE, AND FUSING REQUIREMENTS), LOCATION OF STARTERS AND DISCONNECT SWITCHES.

GUARANTEE:

ON FINAL COMPLETION, FURNISH TO OWNER, A WRITTEN GUARANTEE COVERING THE COMPLETE INSTALLATION FOR A PERIOD OF (1) YEAR FROM THE DATE OF WORK STATING IN EFFECT THAT ANY DEFECTS IN MATERIALS OR WORKMANSHIP OCCURRING DURING TERMS OF SAID GUARANTEE SHALL BE MADE GOOD BY THE CONTRACTOR WITHOUT THE EXPENSE OF THE OWNER.

CJS ARCHITECTS
BUFFALO | ROCHESTER
www.cjsarchitects.com

ARCHITECT
CJS ARCHITECTS
755 SENECA STREET, BUFFALO, NY 14210
(716)716.856.6448)

STRUCTURAL ENGINEER
TREDO ENGINEERS
755 SENECA STREET, BUFFALO, NY 14210
(716)716.876.7147)

MEP.FP ENGINEER
BUFFALO ENGINEERING, P.C.
4245UNION ROAD, SUITE 204 BUFFALO, NY 14425
(716.633.5300)

CIVIL ENGINEER
TREDO ENGINEERS
755 SENECA STREET, BUFFALO, NY 14210
(716)716.876.7147)

STATE OF NEW YORK
BRIAN P. ZINTEL
LICENSED PROFESSIONAL ENGINEER
099670

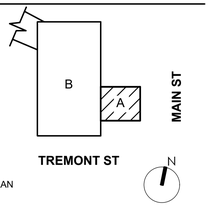

KEY PLAN

RIVIERA THEATRE AND ORGAN PRESERVATION SOCIETY

RIVIERA THEATRE GREEN ROOM

67 WEBSTER ST.
NORTH TONAWANDA, NY
14210

REV. #	DESCRIPTION	DATE

JOB NO.	2545
SCALE	AS NOTED
ISSUE DATE	10/21/2026
DRAWN BY	JRA
CHECKED BY	BPZ

THIS IS A SINGLE SHEET OF A COHESIVE SET OF CONSTRUCTION DOCUMENTS (INCLUDING DRAWINGS AND SPECIFICATIONS). INTERPRETATION OF THE INFORMATION AS PRESENTED SHOULD BE BASED ON THE ENTIRE SET OF DOCUMENTS.

DRAWING TITLE

MECHANICAL SPECIFICATIONS

M-400

100% CONSTRUCTION DOCUMENTS

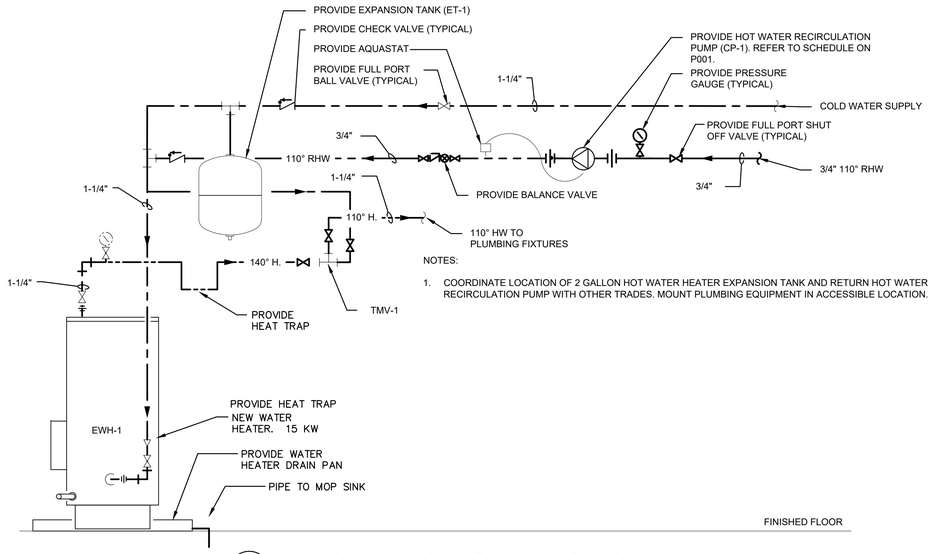

NOTES:

1. COORDINATE LOCATION OF 2 GALLON HOT WATER HEATER EXPANSION TANK AND RETURN HOT WATER RECIRCULATION PUMP WITH OTHER TRADES. MOUNT PLUMBING EQUIPMENT IN ACCESSIBLE LOCATION.

1 WATER HEATER INSTALLATION DETAIL

SCALE: NONE

LEGENDS AND ABBREVIATIONS

CW	CW	COLD WATER
HW	HW	HOT WATER
RHW	RHW	RECIRCULATING HOT WATER
SAN	SAN	SANITARY SEWER (BELOW FLOOR)
SAN	SAN	SANITARY SEWER (ABOVE FLOOR)
ST	ST	PRIMARY STORM SEWER (BELOW FLOOR)
ST	ST	PRIMARY STORM SEWER (ABOVE FLOOR)
SST	SST	SECONDARY SANITARY SEWER (ABOVE FLOOR)
V	V	VENT
LPG	LPG	LOW PRESSURE GAS PIPING (7–11" W.C.)
MPG	MPG	MEDIUM PRESSURE GAS PIPING (2 PSI)
D	D	DRAIN FROM ELEVATOR SUMP PUMP
		SHUT OFF VALVE
		CHECK VALVE
		GAS VALVE (AGA APPROVED)
		GAS REGULATOR VALVE
		STRAINER
		BALANCING VALVE
		BACKFLOW PREVENTION DEVICE
		GAS METER

NOTE:
ALL LEGENDS AND ABBREVIATIONS MAY NOT BE USED ON DRAWINGS.

		REMOVE PIPING TO THIS POINT
		CONNECT NEW TO EXISTING
	WH	WALL HYDRANT (EXTERIOR)
X	SA	SHOCK ABSORBER (SIZE PER PDI)
	VTR	VENT THRU ROOF
	PDI	PLUMBING DRAINAGE INSTITUTE
	CFH	CUBIC FEET PER HOUR
	RD	ROOF DRAIN
	FCO	FLOOR CLEANOUT
	WCO	WALL CLEANOUT
	FD	FLOOR DRAIN
FS	FS	FLOOR SINK
E		CAP
	TFA	TO FLOOR ABOVE
	TFB	TO FLOOR BELOW
	FFA	FROM FLOOR ABOVE
	FFB	FROM FLOOR BELOW
	EX.	EXISTING
	DWH	DOMESTIC WATER HEATER
	WSFU	WATER SUPPLY FIXTURE UNIT
	SDFU	SANITARY DRAINAGE FIXTURE UNIT

DOMESTIC ELECTRIC WATER HEATER

MARK	LOCATION	MANUFACTURER/ MODEL NO.	KW INPUT	STORAGE (GALLONS)	RECOVERY GPH @ 100°F RISE	STORED WATER TEMP	EWT	ELECTRIC	FLA	WATER CONNECTIONS	NOTES
EWH-1	STORAGE	A.O. SMITH DRE-52-15	18.0	50	72	140	40	208v/3PH	50	1-1/4"	1,2

NOTES:
1. PROVIDE DRAIN PAN UNDER DOMESTIC WATER HEATERS.
2. PIPE SAFE PAN DRAIN TO FLOOR DRAIN

RECIRCULATION PUMP DOMESTIC HOT WATER

UNIT NO.	LOCATION	MANUFACTURER/ MODEL NO.	GPM	HEAD (FT)	MOTOR (HP)	VOLTS/PHASE	AMPS	RPM	TYPE	CONSTRUCTION	CONNECTIONS	NOTES
CP-1	JANITOR	TACO MODEL 008-SF6	6	10	1/25	115V/1	0.79	3250	CIRCULATOR	STAINLESS STEEL	3/4"	1

NOTES:
1. REFER TO DETAIL AND PLANS.

EXPANSION TANK SCHEDULE

UNIT NO.	MODEL NO.	LOCATION	TANK TYPE	TANK VOLUME (GAL)	ACCEPTANCE (GAL)	AVERAGE DESIGN TEMP	FLUID TYPE	TANK PRESSURE	HEIGHT (IN)	DIAMETER (IN)	INLET (IN)	WEIGHT (LBS)	NOTES
ET-1	AMTROL ST-5	STORAGE	DIAPHRAGM	2.0	0.9	110°F	WATER	55 PSIG	14	8	¾	10	1,2,3,4,5,6

NOTES:
1. PROVIDE ASME RATED IN-LINE MODEL.
2. PROVIDE HEAVY DUTY BODY NSF/ANSI 61 DIAPHRAGM.
3. PROVIDE POLY PROPYLENE LINER.
4. PROVIDE STAINLESS STEEL CONNECTION.
5. PROVIDE RED OXIDE FINNISH.
6. PROVIDE SCHRADER VALVE W/ EPDM SEAT.

PIPING MATERIAL SCHEDULE

SERVICE		PIPE MATERIALS	FITTINGS	CONNECTION
WATER	ABOVE GROUND	TYPE "L" COPPER/PEX-A	WROUGHT COPPER	NO-LEAD SOLDER/COMPRESSION JOINTS
	BELOW GROUND	TYPE "K" COPPER	TYPE "K" COPPER	BRAZED OR COMPRESSED JOINTS
SANITARY		PVC	NO HUB OR HUB AND SPIGOT	SOLVENT/WELD/COUPLING
VENT		PVC	NO HUB OR HUB AND SPIGOT	SOLVENT/WELD/COUPLING
STORM		PVC	NO HUB OR HUB AND SPIGOT	SOLVENT/WELD/COUPLING
GAS	2" AND UNDER	SCHEDULE 40 BLACK STEEL	MALLEABLE IRON	THREADED
	OVER 2"	SCHEDULE 40 BLACK STEEL	BUTT WELDED STEEL	WELDED

PIPING INSULATION SCHEDULE

INSULATE THE FOLLOWING:

A. HOT WATER PIPING

B. COLD WATER PIPING

C. LAVATORY TRAP AND WATER SUPPLIES (ON HANDICAPPED INSTALLATION).

D. ROOF DRAINAGE (ROOF DRAIN & ALL HORIZONTAL STORM WATER).

INSULATION PRODUCTS AND INSTALLATION SHALL COMPLY WITH ENERGY CONSERVATION CONSTRUCTION CODE OF NEW YORK STATE. PROVIDE MINIMUM R-3 INSULATION FOR DOMESTIC HOT WATER PIPING.

HOT WATER PIPING INSULATION SHALL BE PREFORMED, SNAP-ON FIBERGLASS INSULATION WITH PAINTABLE WHITE KRAFT OR ALUMINUM FOIL JACKET.

DOMESTIC COLD WATER AND ROOF DRAINAGE INSULATION SHALL BE SIMILAR TO HOT WATER WITH VAPOR BARRIER.

INSULATION THICKNESS SCHEDULE

SERVICES	INSULATION THICKNESS			
	CONDUCTIONS ($\frac{BTU(IN)}{(HR)(FT^2)(°F)}$)	1" AND LESS	1" TO 1-1/2"	1-1/2" TO 4"
<40°F	0.20-0.26	0.5	1.0	1.0
40-60°F	0.21-0.27	0.5	0.5	1.0
105-140°F	0.21-0.28	1.0	1.0	1.5

WATER SUPPLY FIXTURE UNITS

	UNITS W/ SAFETY FACTOR	SAFETY FACTOR	MAIN SIZE
HOT WSFU	16.4	1.2	1-1/4"
COLD WSFU	41.1	1.2	2"
COMBINED WSFU	47.5	1.2	2"

SANITARY DRAINAGE FIXTURE UNITS

	UNITS W/ SAFETY FACTOR	SAFETY FACTOR	DRAIN SIZE
SDFU	38.4	1.2	4"

GENERAL NOTES:

A. BACKFILLING REQUIREMENTS WITHIN BUILDING: (CONTRACTOR'S RESPONSIBILITY) SUPPORT BURIED PIPING THROUGHOUT ITS ENTIRE LENGTH. WHERE TRENCHES ARE EXCAVATED SUCH THAT THE BOTTOM OF THE TRENCH FORMS THE BED FOR THE PIPE, SOLID AND CONTINUOUS LOAD BEARING SUPPORT SHALL BE PROVIDED BETWEEN JOINTS. BACKFILL SHALL BE FREE FROM DISCARDED CONSTRUCTION MATERIAL AND DEBRIS. CHECK AND COMPLY WITH LOCAL AND FEDERAL BUILDING CODE REQUIREMENTS.

B. EXISTING UTILITIES, PIPING, AND FIXTURES SHOWN WERE TAKEN FROM EXISTING DRAWINGS, NOTES, AND SURVEYS. PLUMBING CONTRACTOR SHALL FIELD VERIFY EXACT LOCATIONS AND QUANTITIES OF EXISTING UTILITIES, PIPING, AND FIXTURES PRIOR TO ANY NEW CONSTRUCTION.

C. THIS CONTRACTOR SHALL OBTAIN AND PAY FOR ALL NECESSARY PERMITS AND FEES REQUIRED TO PERFORM ALL WORK SHOWN WITH THE PROPER AUTHORITIES.

D. REFER TO ARCHITECTURAL SITE PLANS AND LANDSCAPE DRAWINGS FOR AREAS OF GRADING, SIDEWALKS, DRIVES, ETC.

E. ALL PIPING UNDER PAVED AREAS TO BE BACKFILLED WITH SELECT FILL.

F. COORDINATE WITH OWNER PRIOR TO MAKING ANY SHUTDOWNS OF EXISTING SERVICES TO LIMIT DISTURBANCES TO BUILDING OPERATION.

G. PROVIDE FINAL CONNECTION TO ALL FIXTURES AND EQUIPMENT INCLUDING ALL REQUIRED VALVES, TRAPS, SUPPLIES, REDUCERS, ETC.

H. FIRESTOP ALL PENETRATIONS THROUGH RATED WALLS, FLOORS AND CEILING WITH APPROVED FIRESTOP SEALANT. PROVIDE INTUMESCENT SEAL FOR PLASTIC PIPING PENETRATING FIRE RATED ASSEMBLIES INCLUDING WALLS, FLOORS AND CEILINGS.

SHOCK ABSORBER SCHEDULE

P.D.I. UNITS	FIXTURE UNITS	PIPE SIZE
A	1-11	1/2"
B	12-32	3/4"
C	33-60	1"
D	61-113	1-1/4"
E	114-154	1-1/2"
F	155-330	2"

CJS ARCHITECTS
BUFFALO | ROCHESTER
www.cjsarchitects.com

ARCHITECT
CJS ARCHITECTS
755 SENECA STREET, BUFFALO, NY 14210
(716)716.856.6448)

STRUCTURAL ENGINEER
TREDO ENGINEERS
755 SENECA STREET, BUFFALO, NY 14210
(716)716.876.7147)

MEP.FP ENGINEER
BUFFALO ENGINEERING, P.C.
4245UNION ROAD, SUITE 204 BUFFALO, NY 14425
(716.633.5300)

CIVIL ENGINEER
TREDO ENGINEERS
755 SENECA STREET, BUFFALO, NY 14210
(716)716.876.7147)

STATE OF NEW YORK · BRIAN P. ZINTER · 019610 · LICENSED PROFESSIONAL ENGINEER

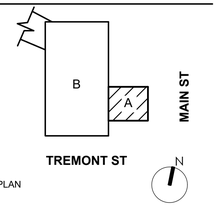

KEY PLAN

RIVIERA THEATRE AND ORGAN PRESERVATION SOCIETY

RIVIERA THEATRE GREEN ROOM

67 WEBSTER ST.
NORTH TONAWANDA, NY
14210

REV. #	DESCRIPTION	DATE

JOB NO.	2545
SCALE	AS NOTED
ISSUE DATE	10/21/2026
DRAWN BY	JRA
CHECKED BY	BPZ

THIS IS A SINGLE SHEET OF A COHESIVE SET OF CONSTRUCTION DOCUMENTS (INCLUDING DRAWINGS AND SPECIFICATIONS). INTERPRETATION OF THE INFORMATION AS PRESENTED SHOULD BE BASED ON THE ENTIRE SET OF DOCUMENTS.

DRAWING TITLE

PLUMBING SCHEDULES

P-001

100% CONSTRUCTION DOCUMENTS

PLUMBING FIXTURE SCHEDULE

MARK	FIXTURE	DRAINAGE		WATER		MAKE AND MODEL AND ACCESSORIES
		SAN	VENT	CW	HW	
FD–1	FLOOR DRAIN	4"	2"	–	–	WATTS MODEL # FD–204–A5–NH–6 4" EPOXY COATED CAST IRON FLOOR DRAIN WITH ANCHOR FLANGE, WEEPHOLES, ADJUSTABLE ROUND HEEL PROOF NICKEL BRONZE STRAINER, AND NO–HUB OUTLET, VANDAL PROOF, WITH TRAP PRIMER CONNECTIONS.
L–1	LAVATORY WALL–MOUNT ADA–COMPLIANT	1–1/2"	1–1/2"	1/2"	1/2"	AMERICAN STANDARD 'MURRO' MODEL '0955.901EC' WALL HUNG LAVATORY, WHITE VITREOUS CHINA, WITH OPTIONAL VITREOUS CHINA SHROUD/KNEE CONTACT GUARD 0059.020EC, WITH CENTER HOLE ONLY LESS OVERFLOW AMERICAN STANDARD 'NEXTGEN' SELECTRONIC INTEGRATED TOUCHLESS LAVATORY FAUCET MODEL '775B.103' DECK MOUNTED SINK FAUCET, FOR SINGLE CENTER HOLE, WITH VANDAL PROOF PRESSURE COMPENSATING VANDAL–RESISTANT MULTI–LAMINAR SPRAY. 0.35 GPM. POWER KIT 'PK00.HAC' HARD–WIRED AC POWER SUPPLY AND 10" EXTENSION CABLE. ADA CERTIFIED, NSF/ANSI 372 CERTIFIED, NSF/ANSI 61 CERTIFIED. ZURN MODEL 'Z1231–EZ–AL–E2' LAVATORY SUPPORT SYSTEM WITH CONCEALED ARMS, WITH COATED RECTANGULAR STEEL UPRIGHTS WITH WELDED FEET, WITH CAST IRON ADJUSTABLE HEADERS, CONCEALED ARMS, STEEL SLEEVES, ADJUSTING BARS, MOUNTING FASTENERS, DURA–COATED SYSTEM WITH CONCEALED ARMS, WITH ADAPTER LUG, WITH CONCEALED ARM ESCUTCHEONS 2 LONG.
SH–1	SHOWER ROLL–IN ADA COMPLIANT	2"	2"	1/2"	1/2"	CLARION MODEL # MP8333LBF34 OR # MP8333RBF34 63"x33"x78" ONE–PIECE BARRIER FREE SHOWER SURROUND SYSTEM WITH 3/4" THRESHOLD, SLIP RESISTANT FLOOR, HAND WAND, MIXING VALVE, GRAB BARS, AND REAR CENTER DRAIN. 1.5 GPM HAND SHOWER; HOSE LENGTH TO BE 60". COORDINATE GRAB BAR, SEAT, SOAP DISH, AND OTHER ACCESSORIES WITH ARCHITECTURAL PLANS AND PROVIDE REINFORCING AS REQUIRED. COORDINATE LEFT HAND OR RIGHT HAND SHOWER LAYOUT WITH ARCHITECTURAL PLANS PRIOR TO ORDER AND INSTALLATION. SHOWER KIT SHALL BE INSTALLED TO MEET ANSI 'TYPE A' INSTALLATION REQUIREMENTS FOR ADA/ANSI COMPLIANCE.
TMV–1	THERMOSTATIC MIXING VALVE	–	–	–	–	ACORN MODEL # MV17–4 LEAD–FREE THERMOSTATIC MASTER MIXING VALVE, INTEGRAL CARTRIDGE STYLE CHECKS, 2 LOCKABLE FULL PORT BRASS BALL VALVES, 10 PSI LOSS AT 70.7 GPM.
WC–1	WATER CLOSET WALL MOUNT FLUSH METER ELONGATED ADA COMPLIANT	3"	2"	1–1/2"	–	AMERICAN STANDARD MODEL AFWALL # 2257.101 ELONGATED FRONT, VITREOUS CHINA, 1.28 GPF, BACK OUTLET, ADA COMPLIANT. FLUSHMETER VALVE: DC POWER #6065.121.002 (TOP SPUD) SEAT: AMERICAN STANDARD #5901.100 HEAVY DUTY OPEN FRONT LESS COVER. PROVIDE ALL REQUIRED ACCESSORIES.
WCO	WALL CLEANOUT	–	–	–	–	WATTS MODEL # CO–440–RD WALL CLEANOUT WITH TWO–PIECE EXPANDABLE CLEANOUT PLUG, STAINLESS STEEL ACCESS COVER, AND VANDAL PROOF STAINLESS STEEL SCREW.
WMB–1	WASHING MACHINE BOX	2"	2"	1/2"	1/2"	SIOUX CHIEF MODEL # 696RG1 FIRE–RATED WASHING MACHINE OUTLET BOX, WITH NO–LEAD VALVES WITH INTEGRAL ARRESTORS. PROVIDE DRAIN PANS UNDER ALL WASHING MACHINES.
HB–1	WALL HYDRANT	–	–	3/4"	–	WATTS MODEL # HY–725 NON–FREEZE WALL HYDRANT WITH LOCKABLE NICKEL BRONZE BOX AND DOOR, CHROME PLATED HYDRANT FACE, INTEGRAL VACUUM BREAKER, AND 3/4" HOSE CONNECTION.

NOTE:
REFER TO SPECIFICATIONS FOR LISTING OF ACCEPTABLE MANUFACTURERS AND FURTHER PRODUCT REQUIREMENTS.
MANUFACTURERS LISTED ABOVE WERE USED FOR BASIS OF DESIGN. REFER TO DRAWINGS FOR ADDITIONAL REQUIRED ITEMS.

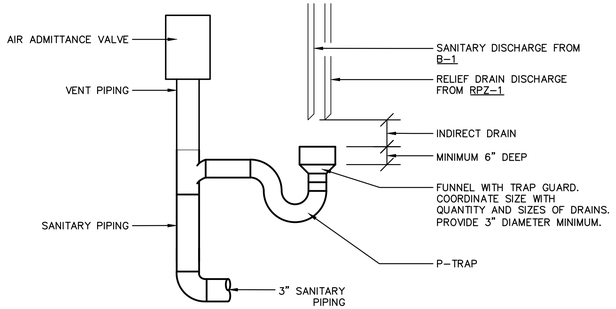

1 INDIRECT DRAIN DETAIL
SCALE: N.T.S.

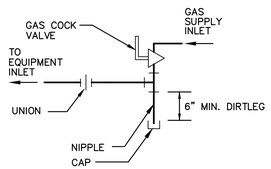

2 GAS CONNECTION DETAIL
SCALE: NTS

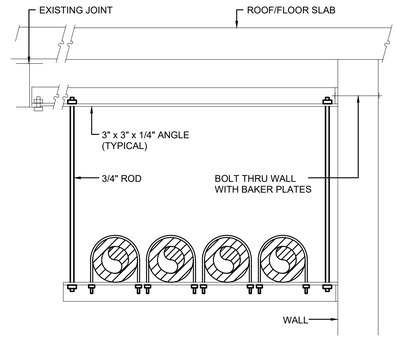

3 PIPE SUPPORT DETAIL
SCALE: NONE

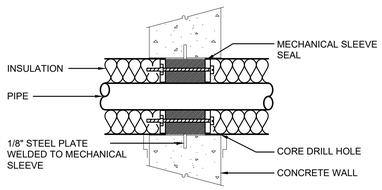

4 PIPE SLEEVE DETAIL
SCALE: NONE

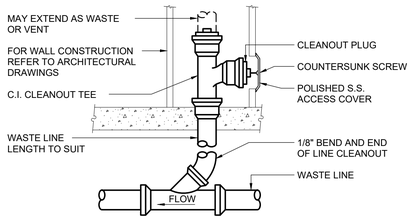

5 WALL CLEANOUT DETAIL
SCALE: NONE

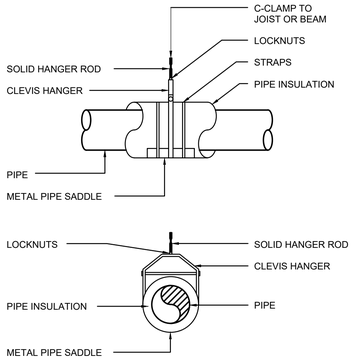

6 SINGLE PIPE HANGER DETAIL
SCALE: NONE

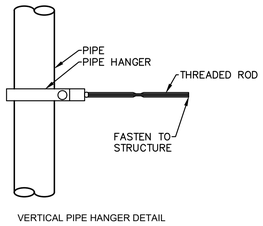

VERTICAL PIPE HANGER DETAIL

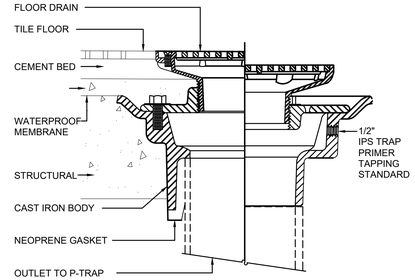

7 FLOOR DRAIN DETAIL
SCALE: NONE

CJS ARCHITECTS
BUFFALO | ROCHESTER
www.cjsarchitects.com

ARCHITECT
CJS ARCHITECTS
755 SENECA STREET, BUFFALO, NY 14210
(716)716.856.6448)

STRUCTURAL ENGINEER
TREDO ENGINEERS
755 SENECA STREET, BUFFALO, NY 14210
(716)716.876.7147)

MEP.FP ENGINEER
BUFFALO ENGINEERING, P.C.
4245UNION ROAD, SUITE 204 BUFFALO, NY 14425
(716.633.5300)

CIVIL ENGINEER
TREDO ENGINEERS
755 SENECA STREET, BUFFALO, NY 14210
(716)716.876.7147)

STATE OF NEW YORK
BRIAN P. ZINTL
089570
LICENSED PROFESSIONAL ENGINEER

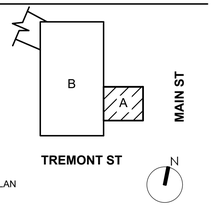

KEY PLAN

RIVIERA THEATRE AND ORGAN PRESERVATION SOCIETY

RIVIERA THEATRE GREEN ROOM

67 WEBSTER ST.
NORTH TONAWANDA, NY
14210

REV. #	DESCRIPTION	DATE

JOB NO.	2545
SCALE	AS NOTED
ISSUE DATE	10/21/2026
DRAWN BY	JRA
CHECKED BY	BPZ

THIS IS A SINGLE SHEET OF A COHESIVE SET OF CONSTRUCTION DOCUMENTS (INCLUDING DRAWINGS AND SPECIFICATIONS). INTERPRETATION OF THE INFORMATION AS PRESENTED SHOULD BE BASED ON THE ENTIRE SET OF DOCUMENTS.

DRAWING TITLE

PLUMBING SCHEDULES AND LEGEND

P-002

100% CONSTRUCTION DOCUMENTS

GENERAL NOTES:

A. COORDINATE INSTALLATION OF PIPING AND EQUIPMENT WITH ALL TRADES PRIOR TO INSTALLATION. COORDINATE ROUTING OF PIPING WITH RADON PIT LOCATIONS. CONTRACTOR SHALL MAINTAIN ALL REQUIRED CLEARANCES FOR INSTALLED EQUIPMENT BY OTHER TRADES.

B. PROVIDE FIRE STOPPING AT ALL RATED FLOOR AND WALL PENETRATIONS. PROVIDE INTUMESCENT SEAL FOR PLASTIC PIPING PENETRATING FIRE RATED ASSEMBLIES INCLUDING WALLS AND FLOORS.

C. ALL WALL BOXES LOCATED IN FIRE RATED WALLS SHALL HAVE INTUMESCENT BACKING TO MAINTAIN FIRE RATING.

D. PROVIDE ALL CORE DRILLING AND PIPE SLEEVES AS REQUIRED.

E. PROVIDE EXCAVATION AND INFILL AS REQUIRED TO INSTALL PIPING BELOW GRADE/SLABS.

F. PROVIDE TRAP GUARDS FOR FLOOR DRAINS.

G. PROVIDE ALL P-TRAPS, VALVES, HOSES, AND SUPPLIES AS REQUIRED.

H. IT IS NOT ACCEPTABLE TO FLAT VENT. VENTS SHALL RISE IN WALLS PRIOR TO OFFSETTING.

I. CONTRACTOR SHALL COORDINATE ALL VENT / FLUE ROOF PENETRATIONS TO BE MINIMUM TEN FEET CLEAR FROM ALL FRESH AIR INTAKES.

J. CONTRACTOR SHALL MAINTAIN ALL EXISTING ROOF WARRANTIES.

K. COORDINATE CEILING TYPE WITH MATERIALS. IT IS NOT APPROPRIATE TO USE PVC IN PLENUM CEILING.

L. PROVIDE CLEANOUTS AT THE BASE OF EACH VERTICAL STORM AND SANITARY PIPING STACK 12" TO 24" ABOVE FINISHED FLOOR. PROVIDE CLEANOUTS ON SANITARY AND STORM PIPING PER 2020 PLUMBING CODE OF NEW YORK STATE, SECTION 708 AND PER PLUMBING SPECIFICATIONS. SOME CLEANOUTS HAVE BEEN OMITTED FROM THE DRAWING FOR CLARITY.

M. PROVIDE WATER HAMMER ARRESTORS AT ALL QUICK CLOSING SUPPLY VALVES. SEE SCHEDULE ON P-001.

DRAWING NOTES ⓘ :

1. CONNECT TO EXISTING DOMESTIC WATER PIPING IN BASEMENT BOILER ROOM.
2. NEW 2" DOMESTIC COLD WATER PIPING UP AND CONTINUED ON FIRST FLOOR PLAN.
3. CONNECT TO EXISTING GAS PIPING IN BASEMENT BOILER ROOM.NEW
4. 1" GAS PIPING UP AND CONTINUED ON FIRST FLOOR PLAN.

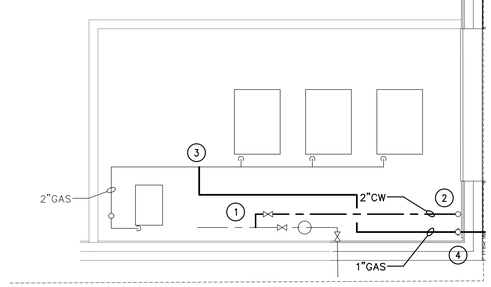

1 BASEMENT PLUMBING PLAN – DOMESTIC WATER
SCALE: 1/4" = 1'–0"

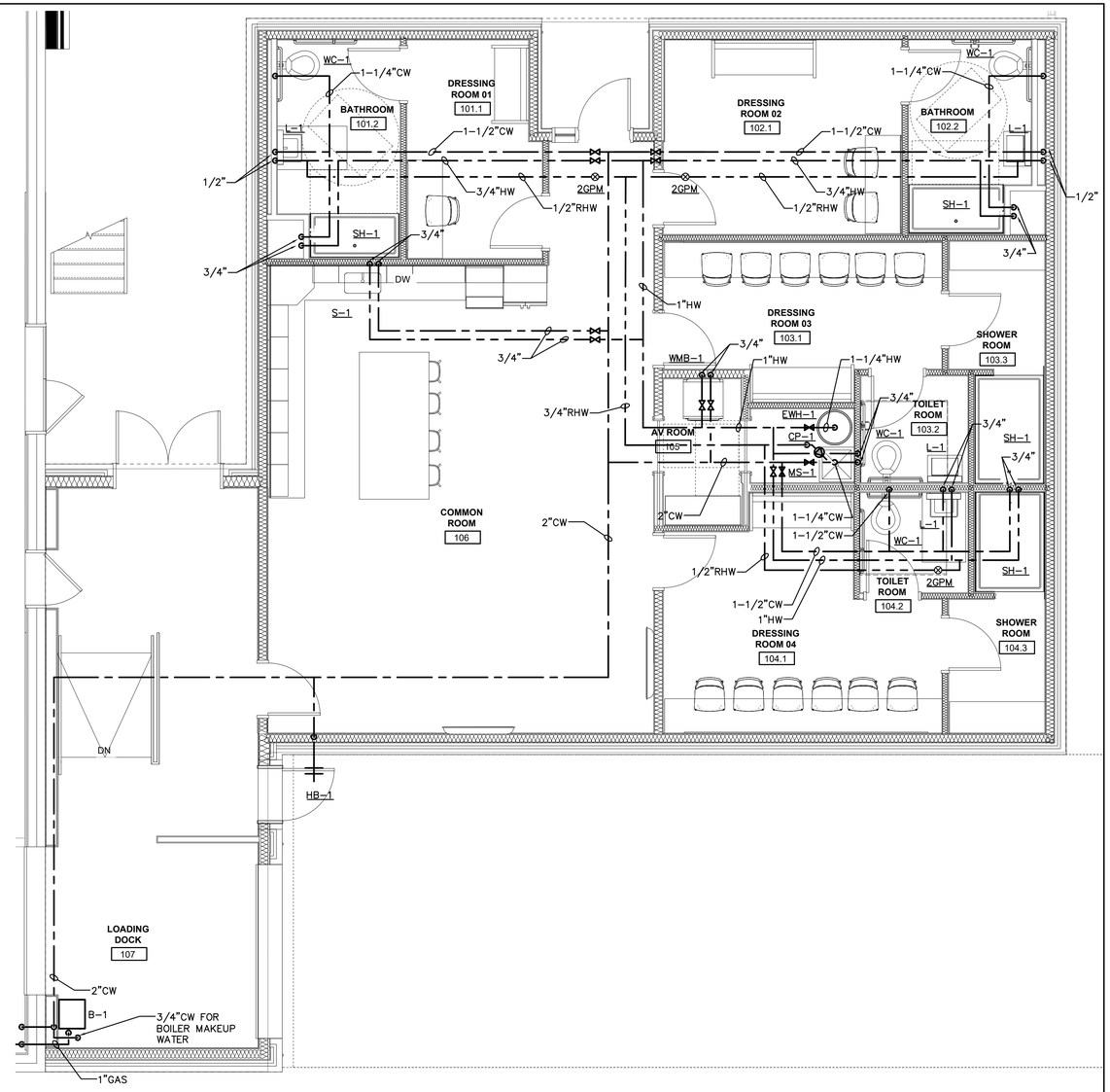

2 GROUND FLOOR PLUMBING PLAN – DOMESTIC WATER
SCALE: 1/4" = 1'–0"

CJS ARCHITECTS
BUFFALO | ROCHESTER
www.cjsarchitects.com

ARCHITECT
CJS ARCHITECTS
755 SENECA STREET, BUFFALO, NY 14210
(716)716.856.6448

STRUCTURAL ENGINEER
TREDO ENGINEERS
755 SENECA STREET, BUFFALO, NY 14210
(716)716.876.7147

MEP.FP ENGINEER
BUFFALO ENGINEERING, P.C.
4245UNION ROAD, SUITE 204 BUFFALO, NY 14425
(716.633.5300)

CIVIL ENGINEER
TREDO ENGINEERS
755 SENECA STREET, BUFFALO, NY 14210
(716)716.876.7147

STATE OF NEW YORK
BRIAN P. ZINTE
089670
LICENSED PROFESSIONAL ENGINEER

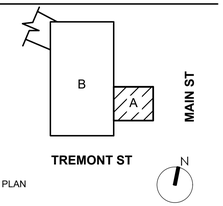

KEY PLAN

RIVIERA THEATRE AND ORGAN PRESERVATION SOCIETY

RIVIERA THEATRE GREEN ROOM

67 WEBSTER ST.
NORTH TONAWANDA, NY
14210

REV. #	DESCRIPTION	DATE

JOB NO.	2545
SCALE	AS NOTED
ISSUE DATE	10/21/2026
DRAWN BY	JRA
CHECKED BY	BPZ

THIS IS A SINGLE SHEET OF A COHESIVE SET OF CONSTRUCTION DOCUMENTS (INCLUDING DRAWINGS AND SPECIFICATIONS). INTERPRETATION OF THE INFORMATION AS PRESENTED SHOULD BE BASED ON THE ENTIRE SET OF DOCUMENTS.

DRAWING TITLE

BASEMENT AND GROUND FLOOR PLUMBING PLAN - DOMESTIC WATER

P-100

100% CONSTRUCTION DOCUMENTS

GENERAL NOTES:

A. COORDINATE INSTALLATION OF PIPING AND EQUIPMENT WITH ALL TRADES PRIOR TO INSTALLATION. COORDINATE ROUTING OF PIPING WITH RADON PIT LOCATIONS. CONTRACTOR SHALL MAINTAIN ALL REQUIRED CLEARANCES FOR INSTALLED EQUIPMENT BY OTHER TRADES.

B. PROVIDE FIRE STOPPING AT ALL RATED FLOOR AND WALL PENETRATIONS. PROVIDE INTUMESCENT SEAL FOR PLASTIC PIPING PENETRATING FIRE RATED ASSEMBLIES INCLUDING WALLS AND FLOORS.

C. ALL WALL BOXES LOCATED IN FIRE RATED WALLS SHALL HAVE INTUMESCENT BACKING TO MAINTAIN FIRE RATING.

D. PROVIDE ALL CORE DRILLING AND PIPE SLEEVES AS REQUIRED.

E. PROVIDE EXCAVATION AND INFILL AS REQUIRED TO INSTALL PIPING BELOW GRADE/SLABS.

F. PROVIDE TRAP GUARDS FOR FLOOR DRAINS.

G. PROVIDE ALL P-TRAPS, VALVES, HOSES, AND SUPPLIES AS REQUIRED.

H. IT IS NOT ACCEPTABLE TO FLAT VENT. VENTS SHALL RISE IN WALLS PRIOR TO OFFSETTING.

I. CONTRACTOR SHALL COORDINATE ALL VENT / FLUE ROOF PENETRATIONS TO BE MINIMUM TEN FEET CLEAR FROM ALL FRESH AIR INTAKES.

J. CONTRACTOR SHALL MAINTAIN ALL EXISTING ROOF WARRANTIES.

K. COORDINATE CEILING TYPE WITH MATERIALS. IT IS NOT APPROPRIATE TO USE PVC IN PLENUM CEILING.

L. PROVIDE CLEANOUTS AT THE BASE OF EACH VERTICAL STORM AND SANITARY PIPING STACK 12" TO 24" ABOVE FINISHED FLOOR. PROVIDE CLEANOUTS ON SANITARY AND STORM PIPING PER 2020 PLUMBING CODE OF NEW YORK STATE, SECTION 708 AND PER PLUMBING SPECIFICATIONS. SOME CLEANOUTS HAVE BEEN OMITTED FROM THE DRAWING FOR CLARITY.

M. PROVIDE WATER HAMMER ARRESTORS AT ALL QUICK CLOSING SUPPLY VALVES. SEE SCHEDULE ON P-001.

DRAWING NOTES (#) :

1. REMOVE EXISTING 3" VENT TERMINATION AND EXTEND VENT ABOVE THE NEW ROOF. TERMINATE WITH A GOOSENECK.
2. 4" STORM PIPING CONTINUED ON CIVIL DRAWINGS.
3. 4" SECONDARY STORM PIPING, DISCHARGE 18" ABOVE GRADE OVER SPLASH BLOCK.
4. 4" SANITARY PIPING CONTINUED ON CIVIL DRAWINGS.

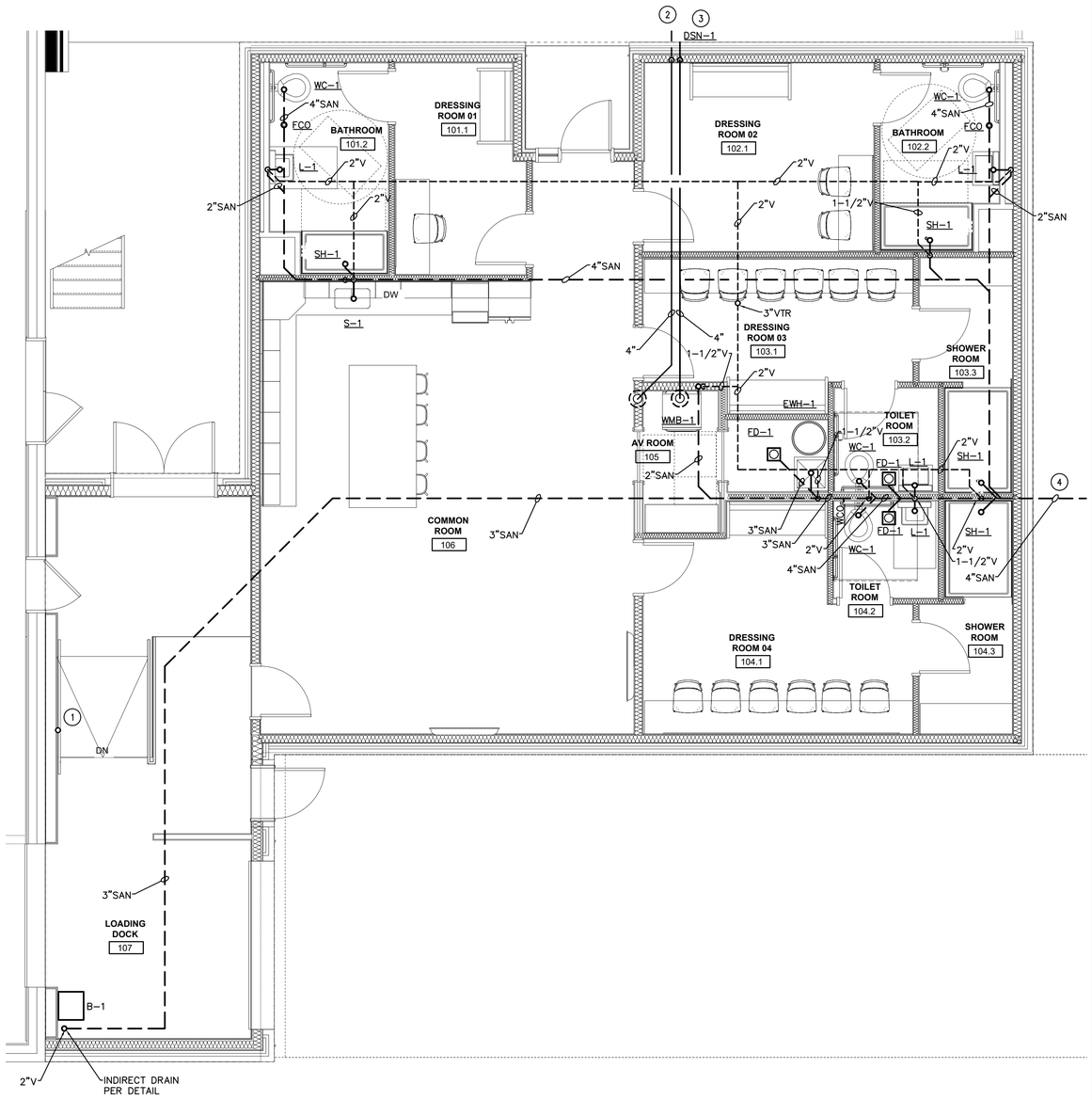

1 GROUND FLOOR PLUMBING PLAN – WASTE AND VENT
SCALE: 1/4" = 1'-0"

CJS ARCHITECTS
BUFFALO | ROCHESTER
www.cjsarchitects.com

ARCHITECT
CJS ARCHITECTS
755 SENECA STREET, BUFFALO, NY 14210
(716)716.856.6448

STRUCTURAL ENGINEER
TREDO ENGINEERS
755 SENECA STREET, BUFFALO, NY 14210
(716)716.876.7147

MEP.FP ENGINEER
BUFFALO ENGINEERING, P.C.
4245UNION ROAD, SUITE 204 BUFFALO, NY 14425
(716.633.5300)

CIVIL ENGINEER
TREDO ENGINEERS
755 SENECA STREET, BUFFALO, NY 14210
(716)716.876.7147

STATE OF NEW YORK · BRIAN P. ZINTEL · 092670 · LICENSED PROFESSIONAL ENGINEER

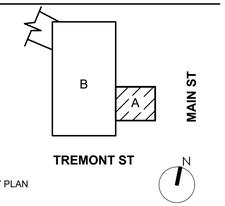

KEY PLAN

RIVIERA THEATRE AND ORGAN PRESERVATION SOCIETY

RIVIERA THEATRE GREEN ROOM

67 WEBSTER ST.
NORTH TONAWANDA, NY
14210

REV. #	DESCRIPTION	DATE

JOB NO.	2545
SCALE	AS NOTED
ISSUE DATE	10/21/2026
DRAWN BY	JRA
CHECKED BY	BPZ

THIS IS A SINGLE SHEET OF A COHESIVE SET OF CONSTRUCTION DOCUMENTS (INCLUDING DRAWINGS AND SPECIFICATIONS). INTERPRETATION OF THE INFORMATION AS PRESENTED SHOULD BE BASED ON THE ENTIRE SET OF DOCUMENTS.

DRAWING TITLE

GROUND FLOOR PLUMBING PLAN - WASTE AND VENT

P-101

100% CONSTRUCTION DOCUMENTS

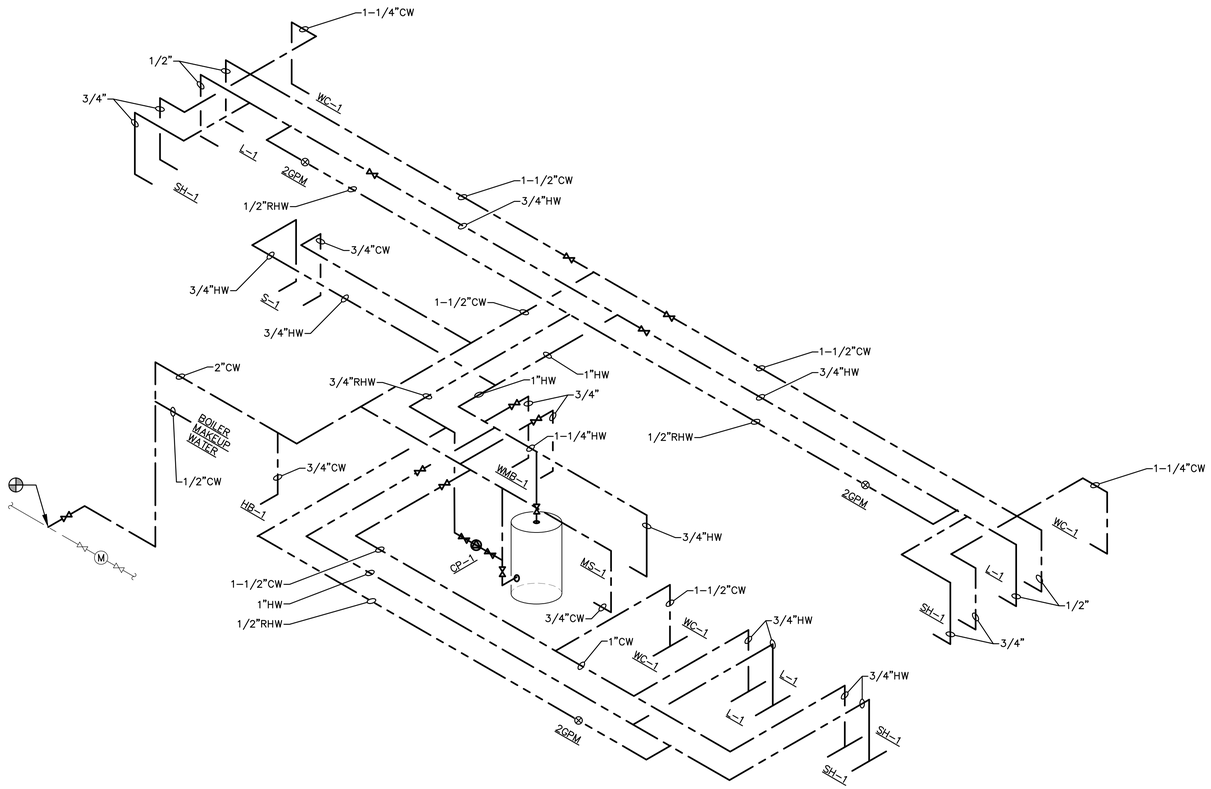

1 P-200 DOMESTIC WATER RISER DIAGRAM
SCALE: NTS

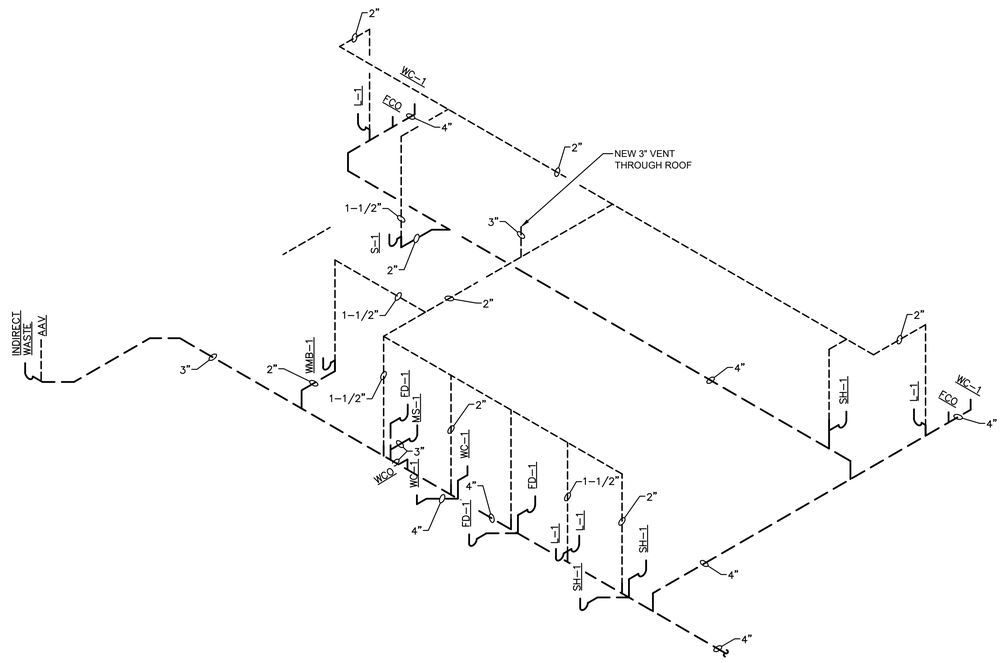

3 P-200 SANITARY AND VENT RISER DIAGRAM
SCALE: NTS

CJS ARCHITECTS
BUFFALO | ROCHESTER
www.cjsarchitects.com

ARCHITECT
CJS ARCHITECTS
755 SENECA STREET, BUFFALO, NY 14210
(716)716.856.6448

STRUCTURAL ENGINEER
TREDO ENGINEERS
755 SENECA STREET, BUFFALO, NY 14210
(716)716.876.7147)

MEP.FP ENGINEER
BUFFALO ENGINEERING, P.C.
4245UNION ROAD, SUITE 204 BUFFALO, NY 14425
(716.633.5300)

CIVIL ENGINEER
TREDO ENGINEERS
755 SENECA STREET, BUFFALO, NY 14210
(716)716.876.7147)

STATE OF NEW YORK
BRIAN P. ZINTEL
099679
LICENSED PROFESSIONAL ENGINEER

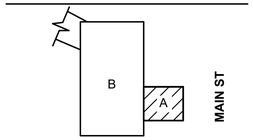

KEY PLAN

RIVIERA THEATRE AND ORGAN PRESERVATION SOCIETY

RIVIERA THEATRE GREEN ROOM

67 WEBSTER ST.
NORTH TONAWANDA, NY
14210

REV. #	DESCRIPTION	DATE

JOB NO.	2545
SCALE	AS NOTED
ISSUE DATE	10/21/2026
DRAWN BY	JRA
CHECKED BY	BPZ

THIS IS A SINGLE SHEET OF A COHESIVE SET OF CONSTRUCTION DOCUMENTS (INCLUDING DRAWINGS AND SPECIFICATIONS). INTERPRETATION OF THE INFORMATION AS PRESENTED SHOULD BE BASED ON THE ENTIRE SET OF DOCUMENTS.

DRAWING TITLE
PLUMBING RISER DIAGRAMS

P-200
100% CONSTRUCTION DOCUMENTS

PLUMBING SPECIFICATIONS:

PART 1 – GENERAL:

1. CONTRACTOR SHALL VISIT SITE, CHECK FACILITIES AND CONDITIONS, VERIFY REQUIREMENTS AND CONNECTIONS IN FIELD, AND TAKE ALL ITEMS INTO OBSERVATION DURING BID.
2. SYSTEMS ARE TO BE COMPLETE AND WORKABLE IN ALL RESPECTS, PLACED IN OPERATION, AND PROPERLY ADJUSTED.
3. EACH CONTRACTOR SHALL PROVIDE FOR HIS OWN CLEAN–UP, REMOVAL AND LEGAL DISPOSAL OF ALL RUBBISH ON A DAILY BASIS.
4. FULLY COORDINATE ALL WORK WITH OTHER CONTRACTORS, SUBCONTRACTORS, THE OWNER, AND COOPERATE COMPLETELY.

PART 2 – CODES AND STANDARDS:

1. CONFORM TO ALL APPLICABLE CODES, GOVERNMENT REGULATIONS, AND LOCAL REQUIREMENTS. CODES INCLUDE, BUT ARE NOT LIMITED TO THE FOLLOWING, NYS BUILDING CODES (PLUMBING, MECHANICAL, AND FUEL GAS), AND NFPA.
2. OBTAIN PERMITS AND PAY ALL FEES. ARRANGE FOR ALL REQUIRED INSPECTIONS AND APPROVALS.

PART 3 – BASE EQUIPMENT AND SUBSTITUTIONS:

1. ALL EQUIPMENT AND MATERIALS SHALL BE NEW AND FREE OF DEFECTS AND HOLD A U.L. LABEL.
2. BASE EQUIPMENT, MANUFACTURER, MODEL, AND CAPACITY OF EQUIPMENT ARE LISTED IN SCHEDULE ON DRAWING. ANY OTHER MANUFACTURER OR MODEL IS CONSIDERED A SUBSTITUTION.
3. SUBSTITUTIONS ARE SUBJECT TO THE APPROVAL OF THE OWNER. IF A SUBSTITUTION IS SUBMITTED, IT IS THE CONTRACTOR'S RESPONSIBILITY TO EVALUATE IT AND CERTIFY THAT THE SUBSTITUTION IS EQUIVALENT IN ALL RESPECTS TO THE BASE SPECIFICATIONS.
4. IF SUBSTITUTIONS ARE APPROVED, NOTIFY ALL OTHER CONTRACTORS, SUBCONTRACTORS OR TRADES AFFECTED BY SUBSTITUTION AND FULLY COORDINATE. ANY COSTS RESULTING FROM SUBSTITUTION SHALL BE RESPONSIBILITY OF AND PAID FOR BY SUBSTITUTING CONTRACTOR.
5. ALL EQUIPMENT SHALL BE INSTALLED IN FULL ACCORDANCE WITH THE MANUFACTURERS DATA AND INSTALLATION INSTRUCTIONS. IT IS THIS CONTRACTORS RESPONSIBILITY TO CHECK AND CONFORM TO TO THESE REQUIREMENTS PRIOR TO START OF WORK.

PART 4 – CHECK, START, ADJUST, AND BALANCING INSTRUCTIONS:

1. AFTER INSTALLATION AND SERVICING, CHECK ALL EQUIPMENT AND PERFORM START UP IN ACCORDANCE WITH THE MANUFACTURER'S INSTRUCTIONS.
2. ALL PIPING SHALL BE FULLY TESTED AND MADE FREE OF LEAKS.
3. INSTRUCT OWNER IN OPERATION OF SYSTEMS AND SUBMIT OPERATING AND MAINTENANCE MANUAL ON ALL EQUIPMENT AND SYSTEMS.

PART 5 – PIPE SLEEVES AND SEALS

1. PROVIDE SLEEVES FOR ALL PIPING PASSING THRU FLOORS, WALLS OR CEILINGS AND SEAL OPENING.
2. FIRESTOP ALL PIPING PENETRATIONS THROUGH RATED FLOORS, WALLS, AND PARTITIONS.
3. PROVIDE WATERTIGHT SEAL ON ALL PIPES PASSING THRU EXTERIOR WALLS, FOUNDATIONS OR WATERPROOF FLOORS.
4. PROVIDE CHROME ESCUTCHEON PLATES ON ALL EXPOSED PIPING PASSING THRU FLOORS, WALLS OR CEILINGS.

PART 6 – WARRANTY

1. FULLY WARRANT ALL MATERIALS, EQUIPMENT AND WORKMANSHIP FOR ONE (1) YEAR FROM DATE OF ACCEPTANCE.
2. REPAIR OR REPLACE WITHOUT CHARGE TO THE OWNER ALL ITEMS FOUND DEFECTIVE DURING THE WARRANTY PERIOD.

PART 7 – SCOPE:

1. FURNISH ALL PLUMBING FIXTURES, EQUIPMENT AND MATERIAL INDICATED AND SHOWN ON DRAWINGS AND INSTALL COMPLETE AND PLACE IN PROPER OPERATION
2. PLUMBING SYSTEMS CONSIST OF, BUT ARE NOT LIMITED TO THE FOLLOWING:.
   A. PLUMBING FIXTURES WITH ALL REQUIRED TRIM
   B. PLUMBING SPECIALTIES AS REQUIRED FOR COMPLETE INSTALLATION.
   C. DOMESTIC COLD/HOT WATER, SANITARY, VENT, AND GAS PIPING.
   D. INSULATION OF PIPING ITEMS AS NOTED.

PART 8 – SANITARY SEWERS/DRAINAGE SYSTEMS:

1. INSTALL SANITARY SEWERS, STACKS, VENTS, FLOOR SINKS, FLOOR DRAINS AND CLEANOUTS FOR PROJECT AND EXTEND AS INDICATED ON THE DRAWINGS.

PART 9 – FIXTURES:

1. INSTALL IN FULL ACCORDANCE WITH MANUFACTURER'S RECOMMENDATIONS AND PLACE IN SATISFACTORY OPERATION.
2. PROVIDE ALL NECESSARY TRAPS AND SUPPLIES TO ALL FIXTURES AND EQUIPMENT.

PART 10 – VALVES:

1. PROVIDE BALL VALVES, CHECK VALVES OR BALANCING VALVES AS INDICATED OR WHERE REQUIRED FOR PROPER MAINTENANCE, ISOLATION AND SAFETY.
2. DOMESTIC WATER: BALL VALVES SIMILAR TO MILWAUKEE NO. BA–100S THREADED OR NO. BA–150S SOLDERED WITH BUNA–N SEATS, PACKING AND GASKETS, 300 PSIG W.O.G. WORKING PRESSURE OR EQUIVALENT APOLLO, GRINNELL OR WATTS.
3. PROVIDE UL LISTED AND AGA APPROVED LUBRICATED PLUG VALVES ON ALL GAS PIPING, OR WHERE CALLED OUT FOR IN THE DESIGN DOCUMENTS.
4. PROVIDE THERMOSTATIC MIXING VALVES, SIMILAR TO WATTS LFMMV, AT ALL SINKS. SET TEMPERATURE OUTPUT TO 109° F.

PART 11 – PIPING INSULATION:

1. INSULATE THE FOLLOWING:
   A. HOT WATER PIPING.
   B. COLD WATER PIPING.
   C. SUPPLY, TRAPS AND WASTE ON PLUMBING FIXTURES.
2. INSULATION PRODUCTS AND INSULATION SHALL COMPLY WITH ENERGY CONSERVATION CONSTRUCTION CODE OF NEW YORK STATE.
3. HOT WATER PIPING INSULATION SHALL BE PREFORMED, SNAP–ON FIBERGLASS INSULATION WITH PAINTABLE WHITE KRAFT OR ALUMINUM FOIL JACKET.
4. DOMESTIC COLD WATER INSULATION SHALL BE SIMILAR TO HOT WATER WITH VAPOR BARRIER.

PART 12 – WATER PIPING:

1. PROVIDE DOMESTIC WATER PIPING AS NOTED PER SCHEDULE ON DRAWING P–002.
2. INCLUDE UNIONS, OR OTHER DISCONNECT MEANS, STOPS OR VALVES FOR ISOLATION OF FIXTURES AND EQUIPMENT. VALVES TO BE FULLY COMPATIBLE WITH PIPING FOR SERVICE INTENDED AS MANUFACTURED BY NIBCO, CRANE OR OTHER APPROVED MANUFACTURER.
3. INSTALL SHOCK ABSORBERS AT EACH FIXTURE OR WHERE REQUIRED TO PREVENT WATER HAMMER.

PART 13 – STERILIZATION OF WATER PIPING:

1. THE WATER SUPPLY AND DISTRIBUTION SYSTEM SHALL BE STERILIZED WITH CHLORINE IN SOLUTION IN ACCORDANCE WITH THE AMERICAN WATER WORKS ASSOCIATION PUBLICATION C–601–1954 AND LOCAL ORDINANCES.
2. ALL WORK AND CERTIFICATION OF PERFORMANCE SHALL BE DONE BY APPROVED APPLICATIONS OR QUALIFIED PERSONNEL WITH CHEMICAL AND LABORATORY EXPERIENCE. SUBMIT A CERTIFICATE OF STERILIZATION.

PART 14 – PIPING TEST:

1. ALL PIPING SYSTEMS INCLUDING VALVES AND ACCESSORIES SHALL BE AS FOLLOWS: TEST PRESSURE SHALL BE MAINTAINED WITH NO LEAKS FOR DURATION SPECIFIED.
   A. SOIL, WASTE, AND VENT – FILL WITH WATER TO 10 FT. ABOVE HIGHEST FIXTURE, TIGHT FOR 8 HOURS.
   B. HOT AND COLD WATER – 150 PSIG HYDROSTATIC. TIGHT FOR 4 HOURS.
   C. NATURAL GAS PIPING – TEST AT 15 PSIG AIR PRESSURE FOR MINIMUM OF 1 HOUR.

PART 15 – SUPPORTS AND HANGERS:

1. HANGERS AND SUPPORTS ARE TO BE PROVIDED TO PROPERLY SUPPORT, SECURE AND ALIGN PIPING AND TO MEET CONDITIONS. SPACING AND TO COMPLY WITH LOCAL CODE REQUIREMENTS.

PART 16 – NATURAL GAS PIPING

1. PIPE–SCHEDULE 40 STEEL PIPE, MALLEABLE IRON FITTINGS, CLASS 150, THREADED FITTINGS SIZES UP TO 2", WELDED JOINTS SIZES 2–1/2" AND LARGER. N.F.G. APPROVED WELDERS REQUIRED.
2. PROVIDE GAS COCKS, DIRT LEG, AND THREADED UNION CONNECTIONS AT EACH GAS APPLIANCE.
3. ALL NATURAL GAS PIPING SHALL BE PAINTED AND LABELED WITH ASSOCIATED GAS PRESSURES AS PER ASME(ANSI) STANDARD A13.1.

PART 17 – DUAL CHECK BACKFLOW PREVENTERS

1. PROVIDE DUAL CHECK BACKFLOW PREVENTER AT EACH STATIONS' HOT AND COLD WATER SUPPLY PER SECTION 608 OF THE 2020 PLUMBING CODE OF NEW YORK STATE.

1.1. CASH ACME 1/2" DUAL CHECK BACKFLOW PREVENTER OR EQUAL.

DIG SAFELY

CONTRACTOR SHALL BE RESPONSIBLE FOR VERIFICATION OF ALL UNDERGROUND UTILITY LOCATIONS AND PROVIDE ALL PROTECTIVE MEASURES FOR EXCAVATION AND UNDERGROUND UTILITY WORK.

CALL:
DIG SAFELY: 1-800-962-7962
A MINIMUM OF TWO (2) DAYS PRIOR TO
COMMENCING WITH EXCAVATION.

CJS ARCHITECTS
BUFFALO | ROCHESTER
www.cjsarchitects.com

ARCHITECT
CJS ARCHITECTS
755 SENECA STREET, BUFFALO, NY 14210
(716)716.856.6448)

STRUCTURAL ENGINEER
TREDO ENGINEERS
755 SENECA STREET, BUFFALO, NY 14210
(716)716.876.7147)

MEP.FP ENGINEER
BUFFALO ENGINEERING, P.C.
4245UNION ROAD, SUITE 204 BUFFALO, NY 14425
(716.633.5300)

CIVIL ENGINEER
TREDO ENGINEERS
755 SENECA STREET, BUFFALO, NY 14210
(716)716.876.7147)

STATE OF NEW YORK
BRIAN P. ZINTER
089670
LICENSED PROFESSIONAL ENGINEER

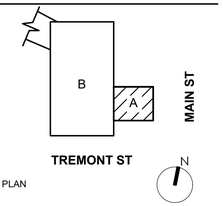

KEY PLAN

RIVIERA THEATRE AND
ORGAN PRESERVATION
SOCIETY

RIVIERA THEATRE
GREEN ROOM

67 WEBSTER ST.
NORTH TONAWANDA, NY
14210

REV. #	DESCRIPTION	DATE

JOB NO.	2545
SCALE	AS NOTED
ISSUE DATE	10/21/2026
DRAWN BY	JRA
CHECKED BY	BPZ

THIS IS A SINGLE SHEET OF A COHESIVE
SET OF CONSTRUCTION DOCUMENTS
(INCLUDING DRAWINGS AND SPECIFICATIONS).
INTERPRETATION OF THE INFORMATION
AS PRESENTED SHOULD BE BASED ON
THE ENTIRE SET OF DOCUMENTS.

DRAWING TITLE

PLUMBING SPECIFICATIONS

P-400

100% CONSTRUCTION DOCUMENTS

PIPE MATERIAL SCHEDULE

SYSTEM TYPE	PIPE MATERIAL	FITTINGS	CONNECTION
WET PIPE SYSTEM 2–INCH AND SMALLER	ASTM A53, GRADE B SCHEDULE 40 BLACK STEEL	MALLEABLE IRON	THREADED, FLANGED, OR ROLLED GROOVED ENDS
WET PIPE SYSTEM 2½–INCH AND LARGER	ASTM A53, GRADE B SCHEDULE 10 BLACK STEEL	MALLEABLE IRON	THREADED, FLANGED, OR ROLLED GROOVE ENDS
WET PIPE SYSTEM	*SCHEDULE 40 CPVC	SCHEDULE 40 CPVC	SOLVENT JOINTS
* IN CONCEALED/PROTECTED LOCATIONS ONLY.			

ABBREVIATIONS

AFF	ABOVE FINISHED FLOOR
AFG	ABOVE FINISHED GRADE
DCDA	DOUBLE CHECK DETECTOR ASSEMBLY
DN	DOWN
EA	EACH
ELEC	ELECTRIC
FDC	FIRE DEPARTMENT CONNECTION
FP	FIRE PROTECTION
FS	FLOW SWITCH
HV	HOSE VALVE
ITC	INSPECTORS TEST CONNECTION
NIC	NOT IN CONTRACT
NTS	NOT TO SCALE
PIV	POST INDICATOR VALVE
PSI	POUNDS PER SQUARE INCH
TS	TAMPER SWITCH
TFA	TO FLOOR ABOVE
TFB	TO FLOOR BELOW
FFA	FROM FLOOR ABOVE
FFB	FROM FLOOR BELOW

NOTE: ABBREVIATIONS AND SYMBOLS ON THIS DRAWING ARE FOR REFERENCE ONLY. ALL SYMBOLS MAY NOT BE USED IN THE FOLLOWING DOCUMENTS.

SYMBOLS

FP	SPRINKLER PIPING
FP	SPRINKLER PIPING BELOW GRADE
	PIPE TURNED UP
	PIPE TURNED DOWN
	CAP
FDC	FIRE DEPARTMENT CONNECTION
	BACKFLOW TEST CONNECTION
FS	FLOW SWITCH
TS	TAMPER SWITCH
	GATE VALVE
	CHECK VALVE
ITC	INSPECTORS TEST CONNECTION
P	PRESSURE GAUGE
	PENDANT SPRINKLER HEAD
	UPTURNED SPRINKLER HEAD

SPRINKLER SYSTEM DESIGN CRITERIA

AREA DESCRIPTION	HAZARD CLASS	SYSTEM TYPE	DENSITY (GPM/SF)	COVERAGE AREA	HOSE STREAM	SPRINKLER TEMP. RATING	KEY NOTES (1)
SEATING AREAS, CORRIDORS AND OFFICE AREA	LIGHT	WET NFPA 13	0.10	1500 SF	–	ORDINARY 155°F	
STORAGE AND FOOD SERVICE AREAS	ORDINARY HAZARD GROUP 1	WET NFPA 13	0.15	1500 SF	–	INTERMEDIATE 155°F	

GENERAL SPRINKLER NOTES:

A. SPRINKLER HEADS SHALL BE AS FOLLOWS UNLESS NOTED OTHERWISE:
   1. SPRINKLER HEADS SHALL BE SEMI–RECESSED, FAST RESPONSE EXTENDED COVERAGE PENDANT SPRINKLERS IN ALL AREAS WITH LAY–IN CEILING.
   2. SPRINKLER HEADS SHALL BE UPRIGHT PENDANT, FAST RESPONSE SPRINKLERS EXTENDED COVERAGE IN ALL AREAS WITH OUT A CEILING.
   3. SPRINKLER HEADS SHALL BE CONCEALED TYPE (RECESSED WITH COVER PLATE), FAST RESPONSE SPRINKLERS IN ALL AREAS WITH GYPBOARD CEILING.

B. IF AT THE TIME OF CONSTRUCTION, ONE OR MORE AREAS ARE NOT CLEARLY DEFINED, THE SPRINKLER DESIGN SHALL BE BASED ON THE HYDRAULICALLY MOST DEMANDING CRITERIA OF THE POSSIBLE CHOICES.

C. LISTED, EXTENDED HEADS, MAY BE USED WHERE APPROPRIATE ON THIS PROJECT.

D. SEE CIVIL SITE PLAN AND SPECIFICATION FOR BACKFLOW PREVENTOR REQUIREMENT FOR THE FIRE PROTECTION WATER SERVICE.

E. SEE CIVIL DRAWINGS FOR LOCATION OF WATER MAIN TAP AND INFORMATION ON PUBLIC WATER MAIN CHARACTERISTICS.

F. ALL SPRINKLER COMPONENTS SHALL COMPLY WITH THE LISTING AND/OR PERFORMANCE REQUIREMENTS OF NFPA 13.

G. PROVIDE POLISHED CHROME SPRINKLER ESCUTCHEONS ON ALL SPRINKLERS WHERE APPLICABLE.

H. CPVC SPRINKLER PIPING MAY BE USED WHERE ALLOWED BY NFPA, THE LOCAL FIRE MARSHAL, AND THE LISTING DOCUMENTATION OF THE CPVC PIPING.

I. THE CONTRACTOR MUST COMPLY WITH ALL LOCAL CODES. ORDINANCE, AND OTHER REQUIREMENT FOR THE SPRINKLER SYSTEM DESIGN. THIS MAY INCLUDE PROVIDING SPRINKLERS FOR AREAS THAT ARE NOT INDICATED ABOVE.

J. ANY DEVIATION FROM THE REQUIREMENT LISTED IN THIS SCHEDULE SHOULD BE CLEARLY MARKED ON THE SPRINKLER DRAWING WITH THE RELEVANT CODE SECTION ALLOWING THE DEVIATION NOTED.

K. NO WET SPRINKLER PIPING SHALL BE RUN IN OR ABOVE UNHEATED AREAS OF THE BUILDING.

L. ALL SPRINKLER PIPING SHALL BE RUN TIGHT TO STRUCTURE ABOVE (OR INSIDE JOIST SPACE IF APPLICABLE).

M. SPRINKLERS MAY BE OMITTED IN THE ELEVATOR SHAFT IF THE ELEVATOR HOISTWAY IS NON–COMBUSTIBLE AND CONTAINS NO HYDRAULIC FLUID. THE ELEVATOR CAR MUST ALSO MEET TEH REQUIREMENTS OF ASME A17.1.

N. CONTRACTOR SHALL VERIFY WATER PRESSURES, DESIGN AND INSTALL A COMPLETE HYDRAULICALLY CALCULATED FIRE SPRINKLER SYSTEM IN ACCORDANCE WITH NFPA AND LOCAL CODE REQUIREMENTS, AND SUBMIT PLANS TO LOCAL AUTHORITIES, ENGINEER AND OWNER FOR APPROVAL.

O. FULLY TEST FINAL SYSTEM PER NFPA, LOCAL, STATE AND INSURANCE PROVIDER REQUIREMENTS.

FIRE PROTECTION SPECIFICATIONS:

PART 1 – GENERAL:

1. PROVIDE ALL WORK IN COMPLIANCE WITH NFPA 13 AND THE BUILDING CODE AND FIRE CODE OF NEW YORK STATE – (2024 VERSION), AS WELL AS WITH ALL LOCAL AND FEDERAL CODES AND ORDINANCES, OTHER APPLICABLE NFPA STANDARDS AND REFERENCED STANDARDS.
2. INSTALL ALL EQUIPMENT AND SYSTEMS IN COMPLETE COMPLIANCE WITH GOVERNING CODES AS RECOGNIZED BY THE AUTHORITY HAVING JURISDICTION, MANUFACTURERS INSTALLATION INSTRUCTIONS AND SPECIFICATIONS.
3. ALL PRODUCTS SHALL BE UL LISTED OR FM APPROVED AND MEET THE REQUIREMENTS OF THE NFPA. CONTRACTOR SHALL PROVIDE BASE OF RISER HYDRAULIC NAME PLATES AND A COMPLETED CONTRACTOR MATERIAL AND TEST CERTIFICATION AT THE END OF THE CONTRACT.
4. DO NOT SCALE DRAWINGS: REFER TO DIMENSIONED ARCHITECTURAL DRAWINGS TO DETERMINE EXACT LOCATION AND LENGTH OF ALL PIPING AND EQUIPMENT INSTALLED.
5. THE DRAWINGS ARE SCHEMATIC IN INTENT. PROVIDE ALL MATERIALS, EQUIPMENT, AND LABOR NECESSARY FOR A COMPLETE INSTALLATION. ADJUST THE LOCATIONS OF ALL PIPING, EQUIPMENT AND CONNECTIONS TO ACCOMMODATE CONSTRUCTION CONDITIONS ENCOUNTERED; OBTAIN APPROVAL FROM THE ARCHITECT FOR ALL CHANGES. EQUIPMENT AND DEVICES SHALL BE FULLY ACCESSIBLE.
6. THE CONTRACTOR SHALL FIELD VERIFY ALL LOCATIONS AND DIMENSIONS OF (PIPING, DUCTWORK, EQUIPMENT, STRUCTURAL ELEMENTS, ETC.) PRIOR TO COMMENCING WITH WORK. COORDINATE AND VERIFY THE INSTALLATION OF SPRINKLER EQUIPMENT AND PIPING AGAINST DUCTWORK, LIGHTING AND PIPING SHOP DRAWINGS FROM OTHER TRADES PRIOR TO COMMENCING WITH WORK. PROVIDE ALL IDENTIFIED CONFLICTS IN WRITING TO THE ARCHITECT. PROVIDE FITTINGS, TRANSITIONS, OFFSETS, ELEVATION CHANGES, ETC. TO MINIMIZE CONFLICTS WITH EXISTING CONDITIONS.
7. THE DRAWINGS DO NOT INDICATE ALL OFFSETS, CHANGES IN ELEVATION, ETC., WHICH MAY BE REQUIRED. THE CONTRACTOR SHALL BE RESPONSIBLE FOR ALL CHANGES IN THE PIPING AND LOCATION OF EQUIPMENT, ETC., TO ACCOMMODATE WORK, OBSTACLES, AND THE WORK OF OTHER CONTRACTORS.
8. PROVIDE FOR THE EXAMINATION OF ALL DRAWINGS AND SPECIFICATIONS AND THE COORDINATION OF WORK WITH ALL OTHER TRADES.
9. THE PLANS ARE INDICATIVE OF THE DESIGN INTENT AND DO NOT INCLUDE INTERIM CONSTRUCTION NECESSARY FOR STORE OPERATION. THE FIRE PROTECTION CONTRACTOR SHALL BE RESPONSIBLE FOR ANY AND ALL CONSTRUCTION/COSTS NECESSARY FOR INTERIM CONSTRUCTION.
10. THE CONTRACTOR SHALL BE RESPONSIBLE FOR PROPER FIELD FITTING AND QUANTITY OF WORK. CONTRACTOR SHALL TAKE FIELD MEASUREMENTS AS REQUIRED AND SHALL BE RESPONSIBLE TO REPAIR ANY EXISTING CONDITIONS DISTURBED OR DAMAGED DURING CONSTRUCTION TO MATCH EXISTING SURFACE CONDITIONS.
11. THE CONTRACTOR SHALL BE RESPONSIBLE FOR MODIFICATION TO ALL EXISTING FINISHES IN AREAS NOT ASSOCIATED WITH CONTRACT.
12. THE CONTRACTOR SHALL BE RESPONSIBLE OR ALL HYDRAULICALLY CALCULATED PIPE SIZES TO INSURE ADEQUATE WATER SUPPLY TO ALL LOCATIONS WHILE MAINTAINING GUIDELINES OF THE INSURANCE UNDERWRITER AND ALL AUTHORITIES HAVING JURISDICTION.
13. PROVIDE PIPING ROUGH IN FOR ALL WORK; OBTAIN ALL NECESSARY INSPECTIONS BY AUTHORITY HAVING JURISDICTION PRIOR TO CLOSING WALLS OR CEILINGS WHERE PIPING IS CONCEALED.
14. PROVIDE ALL CUTTING, PATCHING AND FIRE STOPPING REQUIRED TO ACCOMPLISH WORK SHOWN. PATCH AND SEAL OPENINGS TO MATCH ADJACENT EXISTING WALLS, FLOORS, CEILINGS, ETC UNLESS OTHERWISE INDICATED. CONCEAL ALL WORK IN FINISHED AREAS UNLESS OTHERWISE INDICATED OR DIRECTED BY THE ARCHITECT.
15. PROVIDE FOR THE PROPER OFF–SITE DISPOSAL OF ALL CONSTRUCTION DEBRIS AND/OR EXCAVATED MATERIALS ASSOCIATED WITH WORK IN THIS TRADE IN COMPLIANCE WITH LOCAL, NEW YORK STATE AND FEDERAL LAWS AND REQUIREMENTS.
16. WELDING OF THE SPRINKLER SYSTEM SHALL NOT BE PERMITTED.
17. ALL INTERIOR PIPING SHALL BE PRESSURE TESTED FOR 2 HRS AT 200 PSI.

PART 2 – WET PIPE SPRINKLERS

1. ALL PHYSICAL ATTRIBUTES OF SPECIFIED PRODUCTS ARE BASED ON THOSE MANUFACTURERS LISTED IN THE SPECIFICATIONS AND / OR THE EQUIPMENT SCHEDULES. THE CONTRACTOR IS RESPONSIBLE FOR ALL DESIGN CHANGES BROUGHT ABOUT BY THE USE OF ITEMS SUBMITTED BY OTHER MANUFACTURERS AT NO COST TO OWNER. THE ENGINEER HAS RESERVED THE RIGHT TO REJECT ITEMS BY OTHER MANUFACTURERS FOR REASONS INCLUDING, BUT NOT LIMITED TO, THOSE ITEMS NOT MATCHING THE PHYSICAL ATTRIBUTES OF THE MANUFACTURERS LISTED.
2. PIPING MATERIALS: COMPLY WITH PIPE MATERIAL SCHEDULE. MATCH EXISTING PIPE MATERIAL WHERE POSSIBLE.
3. MALLEABLE– OR DUCTILE–IRON UNIONS: UL 860
4. ROLL GROOVED–JOINT, STEEL PIPE:
   a. PROVIDE MATERIALS BY ONE OF THE FOLLOWING MANUFACTURERS:
      a.a. ANVIL INTERNATIONAL
      a.b. SHURJOINT PIPING PRODUCTS
      a.c. TYCO FIRE & BUILDING PRODUCTS LP.
      a.d. VICTAULIC COMPANY.
   b. PRESSURE RATING: 250 PSIG MINIMUM
   c. COATED, GROOVED–EDN FITTINGS FOR STEEL PIPING, ASTM A47/A 47M, MALLEABLE IRON CASTING OR ASTM A 536, DUCTILE–IRON CASTING: WITH DIMENSIONS MATCHING STEEL PIPE.
   d. GROOVED END PIPE COUPLINGS FOR STEEL PIPING: AWWA C606 AND UL 213, RIGID PATTERN, UNLESS OTHERWISE INDICATED, FOR STEEL–PIPE DIMENSIONS. INCLUDE FERROUS HOUSING SECTIONS, EPDM–RUBBER GASKET, AND BOLTS AND NUTS.
4. LISTED FIRE–PROTECTION VALVES:
   a. BALL VALVES, UL 1091, NPS 1–1/2" AND SMALLER SHALL BE BRONZE BODY WITH THREADED ENDS. NPS 2 AND LARGER SHALL BE BONZE BODY WITH THREADED ENDS OR DUCTILE IRON BODY WITH GROOVED ENDS.

PART 3 – INSTALLATION

1. INSTALL ALL PIPING, EQUIPMENT, ETC. TO AVOID INTERFERENCE WITH THE OPERATION AND SERVICING OF ALL EQUIPMENT. DO NOT INSTALL ANYTHING ABOVE OR WITHIN 3 FT. IN FRONT OF ELECTRICAL GEAR.
2. PIPING INSTALLATION:
   e. PIPING STANDARD: COMPLY WITH REQUIREMENTS FOR INSTALLATION OF SPRINKLER PIPING IN NFPA 13.
   f. PROVIDE LISTED FITTINGS TO MAKE CHANGES IN DIRECTION, BRANCH TAKEOFFS FROM MAINS, AND REDUCTIONS IN PIPE SIZES.
   g. PROVIDE UNIONS ADJACENT TO EACH VALVE IN PIPES NPS 2 AND SMALLER.
   h. PROVIDE FLANGES, FLANGE ADAPTERS, OR COUPLINGS FOR GROOVED–END PIPING ON VALVES, APPARATUS, AND EQUIPMENT HAVING NPS 2–1/2 AND LARGER END CONNECTIONS.
   i. PROVIDE HANGERS AND SUPPORTS FOR SPRINKLER SYSTEM PIPING ACCORDING TO NFPA 13. COMPLY WITH REQUIREMENTS FOR HANGER MATERIALS IN NFPA 13.
   j. FILL SPRINKLER SYSTEM PIPING WITH CLEAN, POTABLE WATER.
   k. PROVIDE ESCUTCHEONS FOR PIPING PENETRATIONS OF WALLS AND CEILINGS.
2. JOINT CONSTRUCTION:
   a. PROVIDE COUPLINGS, UNIONS, AND TRANSITION AND SPECIAL FITTINGS THAT HAVE FINISH AND PRESSURE RATINGS SAME AS OR HIGHER THAN SYSTEM'S PRESSURE RATING FOR ABOVEGROUND APPLICATIONS UNLESS OTHERWISE INDICATED.
   b. PROVIDE UNIONS ADJACENT TO EACH VALVE IN PIPES NPS 2 AND SMALLER.
   c. REAM ENDS OF PIPES AND TUBES AND REMOVE BURRS. BEVEL PLAIN ENDS OF STEEL PIPE.
   d. REMOVE SCALE, SLAG, DIRT, AND DEBRIS FROM INSIDE AND OUTSIDE OF PIPES, TUBES, AND FITTINGS BEFORE ASSEMBLY.
   e. STEEL–PIPING, ROLL–GROOVED JOINTS: ROLL ROUNDED–EDGE GROOVE IN END OF PIPE ACCORDING TO AWWA C606. ASSEMBLE COUPLING WITH HOUSING, GASKET, LUBRICANT, AND BOLTS. JOIN STEEL PIPE AND ROLL GROOVED–END FITTINGS ACCORDING TO AWWA C606 FOR STEEL–PIPE ROLL GROOVED JOINTS.
6. IDENTIFICATION
   e. PROVIDE LABELING AND PIPE MARKERS ON EQUIPMENT AND PIPING ACCORDING TO REQUIREMENTS IN NFPA 13.
7. FIRE STOPPING INSTALLATION
   a. PROVIDE FIRE STOPPING MATERIAL WHERE PIPING PENETRATES RATED WALLS AND FLOOR DECKS. MAINTAIN INDICATED FIRE RATING OF ALL RATED WALLS, PARTITIONS, CEILINGS, AND FLOORS AT PIPE PENETRATIONS. REFER TO ARCHITECTURAL DOCUMENTS FOR LOCATIONS OF RATED WALLS AND FLOOR DECKS.

PART 4 – SUBMITTALS

1. PRODUCT DATA: FOR EACH TYPE OF PRODUCT INDICATED. INCLUDE RATED CAPACITIES, OPERATING CHARACTERISTICS, ELECTRICAL CHARACTERISTICS, AND FURNISHED SPECIALTIES AND ACCESSORIES.
2. SHOP DRAWINGS FOR APPROVAL AND REVIEW: FOR WET–PIPE SPRINKLER SYSTEMS. INCLUDE PLANS, ELEVATIONS, SECTIONS, DETAILS, AND ATTACHMENTS TO OTHER WORK.
3. QUALIFICATION DATA: FOR QUALIFIED INSTALLER.
4. APPROVED SPRINKLER PIPING DRAWINGS: WORKING PLANS, PREPARED ACCORDING TO NFPA 13, THAT HAVE BEEN APPROVED BY AUTHORITIES HAVING JURISDICTION, INCLUDING HYDRAULIC CALCULATIONS. CALCULATIONS AND SHOP DRAWINGS SHALL BE PREPARED BY A NICET LEVEL III OR HIGHER TECHNICIAN UNDER THE DIRECTION OF A REGISTERED PROFESSIONAL ENGINEER REGISTERED IN NEW YORK STATE. SHOP DRAWINGS CALCULATIONS SHALL BY STAMPED AND SIGNED BY A REGISTERED PROFESSIONAL ENGINEER OF THE STATE OF THE PROJECT.
5. FIELD QUALITY–CONTROL REPORTS.
6. OPERATION AND MAINTENANCE DATA: FOR ALL SPRINKLER SYSTEM COMPONENTS TO BE INCLUDED IN THE OPERATION AND MAINTENANCE MANUALS.

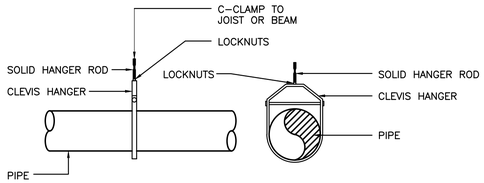

1 CLEVIS HANGER DETAIL
SCALE: NOT TO SCALE

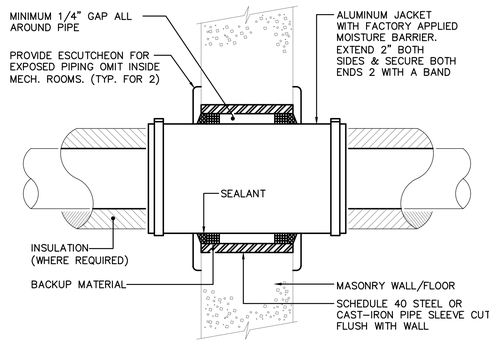

KEYED NOTES:
1. FOR CYP. BOARD WALLS PROVIDE MIN. 16 GAUGE GALV. STEEL SLEEVE W/ LOCK–TYPE LONGITUDINAL SEAM
2. OMIT ALUMINUM JACKET IF PIPING IS UNINSULATED.

GENERAL NOTES:
A. FOR RATED WALLS, INSTALL APPLICABLE UL LISTED THROUGH–PENETRATION FIRESTOP SYSTEM. REFER TO 078413 "PENETRATION FIRESTOPPING"

2 WALL/FLOOR PIPE SLEEVE PENETRATION DETAIL
SCALE: NOT TO SCALE

CJS ARCHITECTS
BUFFALO | ROCHESTER
www.cjsarchitects.com

ARCHITECT
CJS ARCHITECTS
755 SENECA STREET, BUFFALO, NY 14210
(716)716.856.6448)

STRUCTURAL ENGINEER
TREDO ENGINEERS
755 SENECA STREET, BUFFALO, NY 14210
(716)716.876.7147)

MEP.FP ENGINEER
BUFFALO ENGINEERING, P.C.
4245UNION ROAD, SUITE 204 BUFFALO, NY 14425
(716.633.5300)

CIVIL ENGINEER
TREDO ENGINEERS
755 SENECA STREET, BUFFALO, NY 14210
(716)716.876.7147)

STATE OF NEW YORK
BRIAN P. ZINTEL
089670
LICENSED PROFESSIONAL ENGINEER

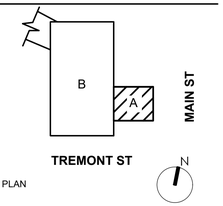

KEY PLAN

RIVIERA THEATRE AND ORGAN PRESERVATION SOCIETY

RIVIERA THEATRE GREEN ROOM

67 WEBSTER ST.
NORTH TONAWANDA, NY
14210

REV. #	DESCRIPTION	DATE

JOB NO.	2545
SCALE	AS NOTED
ISSUE DATE	10/21/2026
DRAWN BY	JRA
CHECKED BY	BPZ

THIS IS A SINGLE SHEET OF A COHESIVE SET OF CONSTRUCTION DOCUMENTS (INCLUDING DRAWINGS AND SPECIFICATIONS). INTERPRETATION OF THE INFORMATION AS PRESENTED SHOULD BE BASED ON THE ENTIRE SET OF DOCUMENTS.

DRAWING TITLE

FIRE PROTECTION SCHEDULES, LEGENDS, AND SPECIFICATIONS

FP-001

100% CONSTRUCTION DOCUMENTS

DRAWING NOTES (#):

1. REMOVE EXISTING FIRE DEPARTMENT CONNECTIONS.
2. CONNECT TO EXISTING 4" PIPING TO FDC'S. EXTEND PIPING TO NEW FIRE DEPARTMENT CONNECTION LOCATION. COORDINATE WITH EXISTING CONDITIONS AND OTHER TRADES.
3. NEW FIRE DEPARTMENT CONNECTION. COORDINATE PIPE ROUTING WITH OTHER TRADES.

GENERAL NOTES:

A. CONTRACTOR SHALL COORDINATE WITH ALL TRADES FOR OBSTRUCTIONS AND PROVIDE ALL ADDITIONAL PIPING AND SPRINKLER HEADS REQUIRED TO PROVIDE APPROPRIATE COVERAGE. CONTRACTOR SHALL BE RESPONSIBLE FOR COORDINATING WITH FINAL CEILING PLAN, MECHANICAL EQUIPMENT, AND LIGHTING LAYOUT. CONTRACTOR SHALL BE RESPONSIBLE FOR ALL SPRINKLER MODIFICATIONS REQUIRED FOR FINAL CEILING PLAN.

B. CONTRACTOR SHALL COORDINATE ALL PIPE ROUTING WITH ARCHITECT, ENGINEER, AND OWNER PRIOR TO INSTALLATION. CONTRACTOR SHALL PROVIDE ALL PIPING MATERIALS AND LABOR TO ACHIEVE DESIRED FINISH.

C. FINAL PIPE SIZES AND LAYOUT SHALL BE DETERMINED BY CONTRACTOR.

D. CONTRACTOR SHALL TAKE CARE NOT TO DAMAGE EXISTING FINISHES ASSOCIATED IN AREAS NOT IN CONTRACT. CONTRACTOR SHALL BE RESPONSIBLE FOR MODIFICATION TO ALL EXISTING FINISHES IN AREAS NOT ASSOCIATED WITH CONTRACT.

C. PROVIDE CORE DRILL AND FIRE STOPPING AT ALL FLOOR AND RATED WALL PENETRATIONS. REFER TO ARCHITECTURAL DOCUMENTS FOR LOCATIONS OF RATED ASSEMBLIES. COORDINATE CORE DRILL REQUIREMENTS WITH STRUCTURAL DOCUMENTS.

D. SPRINKLERS LOCATED IN ACOUSTICAL CEILING TILES SHALL BE CENTERED WITHIN THE TILE AND GRID WHERE POSSIBLE.

E. CONTRACTOR SHALL VERIFY LOCATION OF ALL EXISTING FIRE PROTECTION MAINS, BRANCH PIPING, AND SPRINKLER HEADS IN FIELD PRIOR TO DEMOLITION AND INSTALLATION.

F. CONTRACTOR SHALL BE RESPONSIBLE FOR DOCUMENTING EXISTING SYSTEM PRIOR TO DEMOLITION AND INSTALLATION.

G. SHADED AREA OF FLOOR PLAN IS NOT IN CONTRACT.

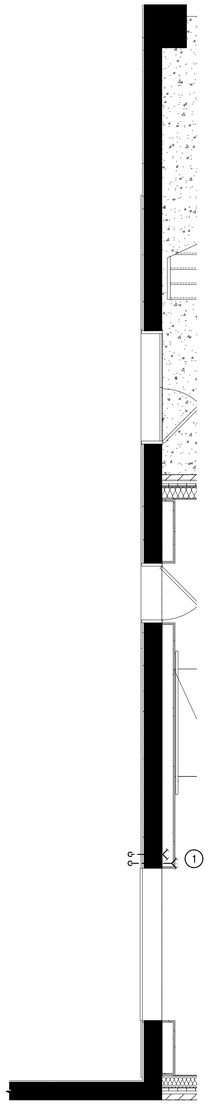

1 FIRST FLOOR – FIRE PROTECTION DEMOLITION
SCALE: 1/4" = 1'-0"

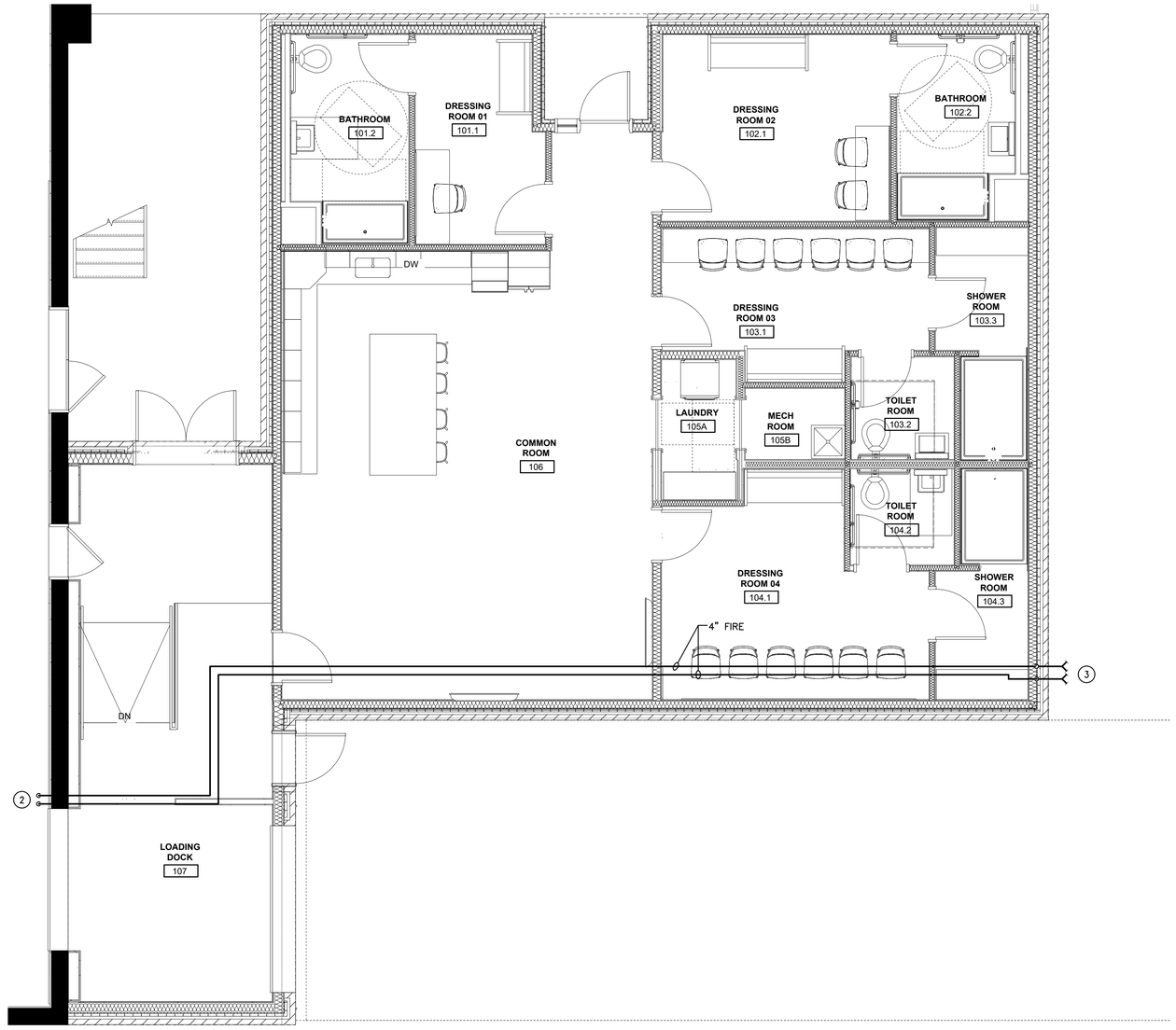

2 FIRST FLOOR – FIRE PROTECTION PLAN
SCALE: 1/4" = 1'-0"

CJS ARCHITECTS
BUFFALO | ROCHESTER
www.cjsarchitects.com

ARCHITECT
CJS ARCHITECTS
755 SENECA STREET, BUFFALO, NY 14210
(716)716.856.6448

STRUCTURAL ENGINEER
TREDO ENGINEERS
755 SENECA STREET, BUFFALO, NY 14210
(716)716.876.7147

MEP.FP ENGINEER
BUFFALO ENGINEERING, P.C.
4245UNION ROAD, SUITE 204 BUFFALO, NY 14425
(716.633.5300)

CIVIL ENGINEER
TREDO ENGINEERS
755 SENECA STREET, BUFFALO, NY 14210
(716)716.876.7147

STATE OF NEW YORK
BRIAN P. ZINTER
089670
LICENSED PROFESSIONAL ENGINEER

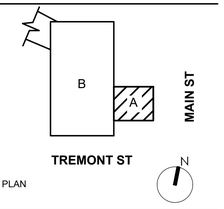

KEY PLAN

RIVIERA THEATRE AND ORGAN PRESERVATION SOCIETY

RIVIERA THEATRE GREEN ROOM

67 WEBSTER ST.
NORTH TONAWANDA, NY
14210

REV. #	DESCRIPTION	DATE

JOB NO.	2545
SCALE	AS NOTED
ISSUE DATE	10/21/2026
DRAWN BY	JRA
CHECKED BY	BPZ

THIS IS A SINGLE SHEET OF A COHESIVE SET OF CONSTRUCTION DOCUMENTS (INCLUDING DRAWINGS AND SPECIFICATIONS). INTERPRETATION OF THE INFORMATION AS PRESENTED SHOULD BE BASED ON THE ENTIRE SET OF DOCUMENTS.

DRAWING TITLE

FIRE PROTECTION PLANS

FP-100

100% CONSTRUCTION DOCUMENTS

ELECTRICAL SYMBOL LIST

PANEL DESIGNATION – TYP.

BRANCH CIRCUIT DESIGNATION, FIELD VERIFY – TYP.

BRANCH CIRCUIT WIRING – TYP.

41 LL–A — 120 VOLT CIRCUIT HOMERUN, CIRCUIT CONCEALED IN CEILING OR WALL. "●" INDICATES GROUND WIRE.

HP 30A–3P (24,26,28) — #10 — 480V MULTI–POLE CIRCUIT HOMERUN, CIRCUIT CONCEALED IN CEILING OR WALL. "●" INDICATES GROUND WIRE, "#10" INDICATES AWG SIZE TO USE FOR BRANCH CIRCUIT.

277 VOLT CIRCUIT HOMERUN, CIRCUIT CONCEALED IN CEILING OR WALL. "●" INDICATES GROUND WIRE.

LL–A 30A–2P (24,26) — #10 — 208V MULTI–POLE CIRCUIT HOMERUN, CIRCUIT CONCEALED IN CEILING OR WALL. "●" INDICATES GROUND WIRE, "#10" INDICATES AWG SIZE TO USE FOR BRANCH CIRCUIT.

29 RPG — BRANCH CIRCUIT HOMERUN, CONCEALED IN FLOOR ROUTED TO NEAREST FULL HEIGHT WALL TO ACCESSIBLE CEILING SPACE. "●" INDICATES GROUND WIRE.

(1) HOT CONDUCTOR, (1) NEUTRAL CONDUCTOR & (1) GROUND CONDUCTOR

(3) HOT CONDUCTORS & (1) GROUND CONDUCTOR

(3) HOT CONDUCTORS, (1) NEUTRAL CONUCTOR & (1) GROUND CONDUCTOR

(2) HOT CONDUCTORS & (1) GROUND CONDUCTOR

C RPG,12 — 20A, 120V, FLUSH MOUNTED TAMPER–RESISTANT TYPE DUPLEX RECEPTACLE, COLOR PER ARCHITECT'S DIRECTION. SUBSCRIPT 'C' – MOUNT RECEPTACLE +6" ABOVE COUNTER BACKSPLASH.

PANEL DESIGNATION – TYP.

BRANCH CIRCUIT DESIGNATION, FIELD VERIFY – TYP.

GFI — 20A, 120V, FLUSH MOUNTED GROUND FAULT CIRCUIT INTERRUPTER TAMPER–RESISTANT TYPE DUPLEX RECEPTACLE. COLOR PER ARCHITECT'S DIRECTION.

WP — 20A, 120V, FLUSH MOUNTED WEATHER RESISTANT DUPLEX RECEPTACLE IN WEATHER–PROOF ENCLOSURE, COLOR PER ARCHITECT'S DIRECTION.

20A, 120V, FLUSH MOUNTED QUAD PLEX TAMPER–RESISTANT RECEPTACLE, COLOR PER ARCHITECT'S DIRECTION.

GFI — 20A, 120V, FLUSH MOUNTED GROUND FAULT CIRCUIT INTERRUPTER BLANK FACE/DEADFRONT FEED–THROUGH TYPE OUTLET. COLOR PER ARCHITECT'S DIRECTION.

SPECIAL PURPOSE RECEPTACLE, COORDINATE EQUIPMENT SPECIFICATIONS WITH OWNER PRIOR TO PURCHASING ELECTRICAL EQUIPMENT. PROVIDE NEMA CONFIGURATION AS REQUIRED TO MATCH EQUIPMENT SPECIFICATIONS.

PROVIDE COMPLETE 120V CONNECTION TO EQUIPMENT.

PROVIDE COMPLETE 208V CONNECTION TO EQUIPMENT.

PROVIDE COMPLETE 480V CONNECTION TO EQUIPMENT.

J — JUNCTION BOX

M — MOTOR CONNECTION

30A F WP — 240 VAC DISCONNECT SWITCH, LEFT NUMERAL INDICATES AMPERE RATING, RIGHT NUMERAL INDICATES NO. OF POLES, HEAVY DUTY TYPE. "WP" INDICATES NEMA 3R ENCLOSURE REQUIRED. LETTER "F" INDICATES FUSED.

$M — 120VAC MOTOR–CIRCUIT DISCONNECT SWITCH IN LOCKABLE ALUMINUM ENCLOSURE FOR SURFACE MOUNT. PROVIDE HORSEPOWER RATING AS COORDINATED WITH MOTOR EQUIPMENT. HUBBELL #HBL1372 OR APPROVED EQUAL.

208/120V SURFACE MOUNTED PANELBOARD, REFER TO PANEL SCHEDULES

480/277V SURFACE MOUNTED PANELBOARD, REFER TO PANEL SCHEDULES

$a,b — TOGGLE SWITCH, 20 AMP RATING, 125/277 VAC, SINGLE–POLE, ROMAN NUMERALS INDICATE NUMBER OF GANGS AND SMALL CASE LETTERS INDICATE SWITCH LEG CONTROL.

$ — SINGLE POLE TOGGLE SWITCH, 20 AMP RATING, 125/277 VAC

ELECTRICAL SYMBOL LIST (CONTINUED)

VS — WALL MOUNTED PASSIVE INFRARED VACANCY SENSOR SWITCH, MANUAL ON / AUTOMATIC OFF, 120VAC, TIME DELAYS SET AT 20 MINUTES. WATT STOPPER #CH–250 OR APPROVED EQUAL, COLOR SELECTED BY ARCHITECT.

DS — WALL MOUNTED DUAL TECHNOLOGY OCCUPANCY SENSOR SWITCH, 120VAC, TIME DELAYS SET AT 20 MINUTES. WATT STOPPER #DSW–100 OR APPROVED EQUAL, COLOR SELECTED BY ARCHITECT.

S a — DIGITAL LIGHTING, 24VDC, 1–BUTTON WALL SWITCH. SMALL CASE LETTERS INDICATE SWITCH LEG CONTROL IN ROOM. REFER LIGHTING CONTROL DETAILS ON DRAWING E–200 AND MANUFACTURER'S INSTALLATION INSTRUCTIONS FOR FURTHER INFORMATION.

D1 a — DIGITAL LIGHTING, 24VDC, 1–BUTTON, 1–ROCKER DIMMING WALL SWITCH. SMALL CASE LETTERS INDICATE SWITCH LEG CONTROL IN ROOM. REFER LIGHTING CONTROL DETAILS ON DRAWING E–200 AND MANUFACTURER'S INSTALLATION INSTRUCTIONS FOR FURTHER INFORMATION.

D2 a,b — DIGITAL LIGHTING, 24VDC, 2–BUTTON, 2–ROCKER DIMMING WALL SWITCH. SMALL CASE LETTERS INDICATE SWITCH LEG CONTROL IN ROOM. REFER LIGHTING CONTROL DETAILS ON DRAWING E–200 AND MANUFACTURER'S INSTALLATION INSTRUCTIONS FOR FURTHER INFORMATION.

RC1 — DIGITAL LIGHTING, 120/277VAC, 1–RELAY, ON/OFF ROOM CONTROLLER. REFER LIGHTING CONTROL DETAILS ON DRAWING E–200 AND MANUFACTURER'S INSTALLATION INSTRUCTIONS FOR FURTHER INFORMATION.

RC3 — DIGITAL LIGHTING, 120/277VAC, 3–RELAY, ON/OFF ROOM CONTROLLER. REFER MANUFACTURER'S INSTALLATION INSTRUCTIONS FOR FURTHER INFORMATION.

DC1 — DIGITAL LIGHTING, 120/277VAC, 1–RELAY, DIMMING ROOM CONTROLLER. REFER LIGHTING CONTROL DETAILS ON DRAWING E–200 AND MANUFACTURER'S INSTALLATION INSTRUCTIONS FOR FURTHER INFORMATION.

DC2 — DIGITAL LIGHTING, 120/277VAC, 2–RELAY, DIMMING ROOM CONTROLLER. REFER LIGHTING CONTROL DETAILS ON DRAWING E–200 AND MANUFACTURER'S INSTALLATION INSTRUCTIONS FOR FURTHER INFORMATION.

VS — DIGITAL LIGHTING, 24VDC, DUAL TECHNOLOGY, CEILING MOUNTED VACANCY SENSOR. REFER LIGHTING CONTROL DETAILS ON DRAWING E–200 AND MANUFACTURER'S INSTALLATION INSTRUCTIONS FOR FURTHER INFORMATION.

EX — EMERGENCY EXIT LIGHT WIRED INTO EMERGENCY BRANCH CIRCUIT AHEAD OF ALL LOCAL SWITCHING AND BUILDING CONTROLS, REFER TO LIGHTING FIXTURE SCHEDULE FOR SPECIFICATIONS.

EM — WALL MOUNTED EMERGENCY BATTERY LIGHTS WIRED INTO EMERGENCY BRANCH CIRCUIT AHEAD OF ALL LOCAL SWITCHING AND BUILDING CONTROLS, REFER TO LIGHTING FIXTURE SCHEDULE FOR SPECIFICATIONS.

LF — 2'X2' LIGHT FIXTURE, 'LF' INDICATES FIXTURE TYPE, TYPICAL – REFER TO LIGHTING FIXTURE SCHEDULE FOR SPECIFICATIONS.

LF — 1'X4' SURFACE OR PENDANT MOUNTED LIGHT FIXTURE, 'LF' INDICATES FIXTURE TYPE, TYPICAL – REFER TO LIGHTING FIXTURE SCHEDULE FOR SPECIFICATIONS.

LF — EXTERIOR WALL SCONCE FIXTURE, 'LF' INDICATES FIXTURE TYPE, TYPICAL – REFER TO LIGHTING FIXTURE SCHEDULE FOR SPECIFICATIONS.

LF — ROUND DOWNLIGHT RECESSED MOUNTED LIGHT FIXTURE, 'LF' INDICATES FIXTURE TYPE, TYPICAL – REFER TO LIGHTING FIXTURE SCHEDULE FOR SPECIFICATIONS.

TV — WALL BOX FOR TELEVISION OUTLET. PROVIDE 1" EMPTY CONDUIT WITH PULLSTRING AND BUSHING FROM WALL BOX TO BASEMENT ELECTRICAL ROOM.

▽ — WALL BOX FOR DATA OUTLET(S), COORDINATE MOUNTING HEIGHT WITH ARCHITECT/OWNER PRIOR TO ROUGH–IN. PROVIDE 1" CONDUIT W/ BUSHINGS AND PULLSTRING STUBBED INTO ACCESSIBLE CEILING SPACE ABOVE LAUNDRY ROOM.

CR — DOOR ACCESS CONTROL CARD READER (BY OWNER'S SECURITY SYSTEMS VENDOR) PROVIDE RECESSED BACK–BOX WITH 3/4" CONDUIT W/ BUSHINGS AND PULLSTRING STUBBED TO ACCESSIBLE CEILING SPACE FOR SYSTEM WIRING.

ELECTRICAL ABBREVIATIONS:

A	AMPERE
AC	ALTERNATING CURRENT
AFCI	ARC–FAULT CIRCUIT–INTERRUPTER
AFF	ABOVE FINISHED FLOOR
AFG	ABOVE FINISHED GRADE
AWG	AMERICAN WIRE GAUGE
C	DEVICE INSTALLED 'OVER COUNTER' (FIELD VERIFY HEIGHT)
C/W	COMPLETE WITH
DC	DIRECT CURRENT
DWT	DISTRICT WIDE TECHNOLOGY
EWC	ELECTRIC WATER COOLER
EXIST,EX	EXISTING
EQUIP	EQUIPMENT
FA	FIRE ALARM
G,GND	GROUND
GFI	GROUND FAULT INTERUPTER
HP	HORSEPOWER
IG	ISOLATED GROUND
J–BOX	JUNCTION BOX
KW	KILOWATT
LV	LOW VOLTAGE
NIC	NOT IN CONTRACT
NL	NIGHT LIGHT (UNSWITCHED CIRCUIT)
RTU	ROOF TOP UNIT
SPECS	SPECIFICATIONS
TEL	TELEPHONE
TR	TAMPER RESISTANT
TYP	TYPICAL
UC	DEVICE INSTALLED 'UNDER COUNTER' (FIELD VERIFY HEIGHT)
V	VOLT
WG	WIRE GUARD
WP	WEATHERPROOF
WR	WEATHER RESISTANT
ø	PHASE
XFMR	TRANSFORMER

GENERAL DRAWING NOTES: (APPLY TO ALL DRAWINGS)

1. THE DRAWINGS ARE DIAGRAMMATIC AND INDICATE GENERALLY THE LOCATIONS OF THE MATERIAL AND EQUIPMENT. THESE DRAWINGS SHALL BE FOLLOWED AS CLOSELY AS POSSIBLE.
2. MINOR DETAILS NOT USUALLY SHOWN OR SPECIFIED, BUT NECESSARY FOR PROPER INSTALLATION AND OPERATION, SHALL BE INCLUDED IN THE CONTRACTORS ESTIMATE THE SAME AS IF HEREIN SPECIFIED OR SHOWN.
3. WITH SUBMISSION OF BID, IT IS MUTUALLY AGREED THE CONTRACTOR HAS INCLUDED THE COST OF ALL REQUIRED ITEMS IN HIS PROPOSAL, AND THAT HE WILL BE RESPONSIBLE FOR THE APPROVED SATISFACTORY FUNCTIONING OF THE ENTIRE SYSTEM WITHOUT EXTRA COMPENSATION.
4. BEFORE SUBMITTING BID, CONTRACTOR SHALL VISIT THE SITE AND EXAMINE THE CONDITIONS ON WHICH HIS WORK IS IN ANY WAY DEPENDANT FOR THE BEST WORKMANSHIP AND OPERATION ACCORDING TO THE INTENT OF SPECIFICATION AND DRAWINGS.
5. NO CONSIDERATION OR ALLOWANCE WILL BE GRANTED FOR FAILURE TO VISIT SITE, OR FOR ANY ALLEGED MISUNDERSTANDING OF MATERIALS TO BE FURNISHED OR WORK TO BE DONE.
6. THE ELECTRICAL CONTRACTOR SHALL VERIFY THE ELECTRICAL REQUIREMENTS OF ALL ACTUAL EQUIPMENT INVOLVED PRIOR TO THE INSTALLATION OF ELECTRICAL SERVICE TO THE SAME.
7. ANY WORK INSTALLED CONTRARY TO, OR WITHOUT CONCURRENCE OF THE OWNER'S REPRESENTATIVE, SHALL BE SUBJECT TO CHANGE AS DIRECTED BY THE OWNER'S REPRESENTATIVE, AND NO EXTRA COMPENSATION WILL BE ALLOWED TO THE CONTRACTOR FOR MAKING THE CHANGES.
8. THE CONTRACTOR SHALL TEST ALL NEW SYSTEMS AND REPAIR OR REPLACE ALL DEFECTIVE WORK. THE CONTRACTOR SHALL MAKE ALL NECESSARY ADJUSTMENTS TO THE SYSTEM AND SHALL INSTRUCT THE OWNER'S PERSONNEL IN THE PROPER OPERATIONS OF THE SYSTEMS.
9. ALL MATERIAL AND INSTALLATION SHALL BE IN ACCORDANCE WITH THE LATEST EDITION OF THE NATIONAL ELECTRIC CODE, LOCAL CODES, AND ORDINANCES.
10. ALL CONDUITS ON EXPOSED WORK SHALL BE RUN AT RIGHT ANGLES TO, AND PARALLEL WITH, THE SURROUNDING WALL AND SHALL CONFORM TO THE FORM OF THE CEILING. NO DIAGONAL RUNS WILL BE ALLOWED. BENDS IN PARALLEL CONDUIT RUNS SHALL BE CONCENTRIC. ALL CONDUIT SHALL RUN PERFECTLY STRAIGHT AND TRUE.
11. EQUIPMENT MANUFACTURER NAMES AND MODEL NUMBERS ARE LISTED AS THE BASIS OF DESIGN AND AS A STANDARD FOR CONSTRUCTION AND FEATURES. MANUFACTURERS OF EQUIVALENT EQUIPMENT MAY BE SUBSTITUTED UPON APPROVAL BY THE ENGINEER.
12. CONTRACTOR SHALL SUBMIT SHOP DRAWINGS, CATALOG CUT SHEETS, AND PRODUCT DATA FOR ALL ELECTRICAL EQUIPMENT AND COMPONENTS TO BE INSTALLED.
13. PROVIDE TYPEWRITTEN PANELBOARD SCHEDULES FOR ALL PANELS, WITH CORRECT NOTES PERTAINING TO EQUIPMENT.
14. ALL RECEPTACLES, SWITCHES, ETC. IN RATED WALLS AND CEILINGS MUST BE INSTALLED A MINIMUM OF 24" FROM EACH OTHER OR PROPERLY FIRESTOPPED TO MAINTAIN RATINGS IF WITHIN THE SAME WALL OR CEILING CAVITY. PROVIDE ALL LABOR AND MATERIALS REQUIRED TO MATCH RATING OF WALL AND CEILING CONSTRUCTION. FIRE CAULK ANY PENETRATIONS OF RATED WALLS OR CEILINGS.
15. GUARANTEE THE ENTIRE ELECTRICAL SYSTEM FOR A PERIOD OF ONE YEAR FROM THE DATE OF ACCEPTANCE AS COMPLETE BY THE OWNER.
16. PROVIDE ALL LABOR, EQUIPMENT AND MATERIALS REQUIRED FOR ELECTRICAL SYSTEMS INDICATED ON THESE DRAWINGS. THE WORK SHALL BE TESTED AND LEFT COMPLETE AND IN SATISFACTORY OPERATION SUBJECT TO THE APPROVAL OF THE AUTHORITIES AND THE OWNER'S REPRESENTATIVE.
17. ALL CONDUITS SHALL BE INSTALLED AS HIGH AS POSSIBLE ABOVE FINISHED CEILINGS AND CONCEALED IN WALLS UNLESS OTHERWISE INDICATED. ALL CONDUITS SHALL RUN PARALLEL AND PERPENDICULAR WITH BUILDING WALLS AND STRUCTURE. CONDUITS CONCEALED IN WALLS SHALL BE INSTALLED VERTICALLY, HORIZONTAL RUNS OF CONDUIT SHALL NOT BE PERMITTED.
18. CONTRACTOR IS HEREBY CAUTIONED THAT ELECTRIC POWER CHARACTERISTIC (VOLTAGE, PHASE, HORSEPOWER, AMPERAGE, ETC.) OF EQUIPMENT IS BASED ON AVAILABLE INFORMATION AT THE TIME OF PROJECT DESIGN. CONTRACTOR MUST VERIFY CHARACTERISTICS FOR EACH PIECE OF NEW EQUIPMENT PRIOR TO ORDERING ELECTRICAL EQUIPMENT. INDICATE VERIFICATION ON SUBMITTALS.
19. LOCATIONS INDICATED FOR NEW LIGHTING FIXTURES ARE APPROXIMATE. LOCATE FIXTURES AS REQUIRED TO AVOID INTERFERENCE WITH NEW BUILDING STEEL, PIPING, DUCTWORK, CONDUIT, DIFFUSERS, GRILLES, SPEAKERS, SMOKE DETECTORS, ETC. FIELD COORDINATE EXACT LOCATIONS AS NEAR AS POSSIBLE TO THE LOCATION INDICATED.
20. CONTRACTOR SHALL REVIEW ALL TRADES CONTRACT DOCUMENTS TO DETERMINE SPECIFIC MOUNTING LOCATIONS FOR ELECTRICAL EQUIPMENT. COORDINATE EXACT MOUNTING LOCATIONS WITH THE ARCHITECT AND OTHER CONTRACTORS. REFER TO ARCHITECTURAL PLANS FOR CASEWORK LAYOUT, ELEVATIONS, ETC. COORDINATE WITH LOCATIONS OF ELECTRICAL DEVICES AND OUTLETS.
21. EXACT LOCATION OF MECHANICAL AND PLUMBING EQUIPMENT THAT REQUIRE ELECTRICAL CONNECTIONS ARE SHOWN ON THE MECHANICAL AND PLUMBING DRAWINGS.
22. ALL NEW CIRCUITING SHALL BE CONCEALED (EXCEPT IN UTILITY ROOMS, ELECTRICAL AND MECHANICAL ROOMS). WHERE CONCEALMENT OF CIRCUITING IS IMPOSSIBLE, SURFACE RACEWAYS SHALL BE USED FOR ALL EXPOSED CIRCUITING (SEE SPECIFICATIONS REGARDING USE OF SURFACE RACEWAYS). ALL SURFACE RACEWAYS SHALL BE PAINTED TO MATCH EXISTING WALL SURFACE AND SHALL CONTAIN A GREEN INSULATED GROUND CONDUCTOR.

- MOUNTING HEIGHTS: UNLESS OTHERWISE INDICATED OR CALLED FOR, OR BECAUSE OF SPECIAL CONDITIONS, THE MOUNTING HEIGHTS OF ALL OUTLETS SHALL BE GENERALLY AS FOLLOWS:

LOCAL SWITCHES	46" ABOVE FLOOR TO CENTER	FIRE ALARM PULL STATION	46" ABOVE FLOOR TO ACTIVATING HANDLE OR LEVER.
RECEPTACLES	18" ABOVE FLOOR TO CENTER	COMBINATION FIRE ALARM AUDIO VISUAL UNIT (WALL)	80" ABOVE FLOOR TO CENTER OR 6" BELOW CEILING, WHERE THE LOWER HEIGHT CASE SHALL BE USED.
WALL MOUNTED FIXTURES	HEIGHT AS DIRECTED	FIRE ALARM VISUAL NOTIFICATION UNIT (WALL)	80" ABOVE FLOOR TO CENTER OR 6" BELOW CEILING, WHERE THE LOWER HEIGHT CASE SHALL BE USED, NOT TO EXCEED 96" A.F.F.
MOTOR CONTROLS	48" ABOVE FLOOR TO TOP OF DEVICE	DUCT SMOKE DETECTOR REMOTE TEST STATION	46" ABOVE FLOOR TO CENTER
DISCONNECT AND SAFETY SWITCHES	48" ABOVE FLOOR TO TOP OF DEVICE	TELEPHONE OUTLET (DESK TYPE) OR COMPUTER OUTLET	18" ABOVE FLOOR TO CENTER
PANELBOARDS	6'–6" ABOVE FLOOR TO CENTER OF TOP MOST DEVICE HANDLE	TELEPHONE OUTLET (WALL)	48" ABOVE FLOOR TO TOP OF PHONE
EXIT LIGHTS (WALL MOUNTED)	9" ABOVE DOOR HEAD TO CENTER		

CJS ARCHITECTS
BUFFALO | ROCHESTER
www.cjsarchitects.com

ARCHITECT
CJS ARCHITECTS
755 SENECA STREET, BUFFALO, NY 14210
(716)716.856.6448)

STRUCTURAL ENGINEER
TREDO ENGINEERS
755 SENECA STREET, BUFFALO, NY 14210
(716)716.876.7147)

MEP.FP ENGINEER
BUFFALO ENGINEERING, P.C.
4245UNION ROAD, SUITE 204 BUFFALO, NY 14425
(716.633.5300)

CIVIL ENGINEER
TREDO ENGINEERS
755 SENECA STREET, BUFFALO, NY 14210
(716)716.876.7147)

STATE OF NEW YORK * BRIAN P. ZINTEL * 099670 LICENSED PROFESSIONAL ENGINEER

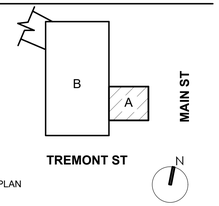

KEY PLAN

RIVIERA THEATRE AND ORGAN PRESERVATION SOCIETY

RIVIERA THEATRE GREEN ROOM
67 WEBSTER ST.
NORTH TONAWANDA, NY
14210

REV. #	DESCRIPTION	DATE

JOB NO.	2545
SCALE	NTS
ISSUE DATE	10/21/2026
DRAWN BY	JRG
CHECKED BY	-

THIS IS A SINGLE SHEET OF A COHESIVE SET OF CONSTRUCTION DOCUMENTS (INCLUDING DRAWINGS AND SPECIFICATIONS). INTERPRETATION OF THE INFORMATION AS PRESENTED SHOULD BE BASED ON THE ENTIRE SET OF DOCUMENTS.

DRAWING TITLE

ELECTRICAL SYMBOL LEGEND AND GENERAL NOTES

E-001

100% CONSTRUCTION DOCUMENTS

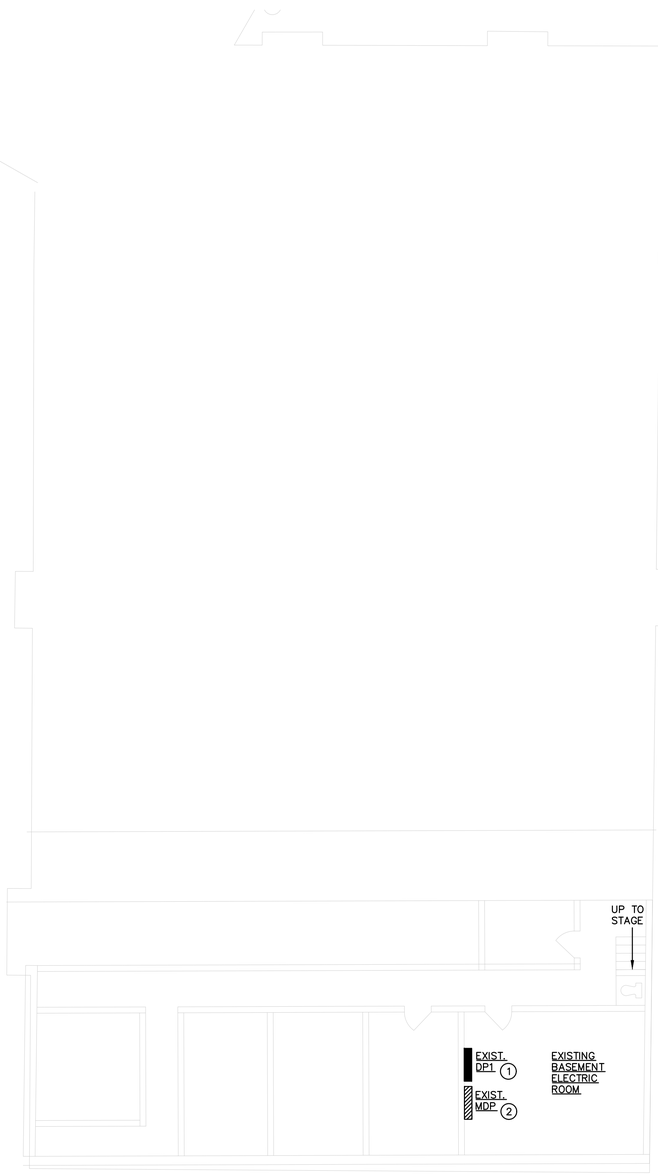

1 THEATRE BASEMENT PLAN – ELECTRICAL
SCALE: 1/8" = 1'-0"

(#) PLAN NOTES:

1. PROVIDE NEW CIRCUIT BREAKER IN EXISTING PANEL 'DP1' TO FEED NEW PANEL 'LP2' LOCATED IN GREEN ROOM ADDITION. NEW CIRCUIT BREAKER SHALL BE LISTED FOR USE IN EXISTING PANEL AND MATCH EXISTING AIC RATINGS. REFER TO ELECTRICAL SINGLE LINE DIAGRAM ON DRAWING E-300 FOR ADDITIONAL INFORMATION.

2. PROVIDE NEW CIRCUIT BREAKER IN EXISTING PANEL 'MDP' TO FEED NEW ROOFTOP UNIT LOCATED ON ROOF OF GREEN ROOM ADDITION. NEW CIRCUIT BREAKER SHALL BE LISTED FOR USE IN EXISTING PANEL AND MATCH EXISTING AIC RATINGS. REFER TO ELECTRICAL SINGLE LINE DIAGRAM ON DRAWING E-300 FOR ADDITIONAL INFORMATION.

CJS ARCHITECTS
BUFFALO | ROCHESTER
www.cjsarchitects.com

ARCHITECT
CJS ARCHITECTS
755 SENECA STREET, BUFFALO, NY 14210
(716)716.856.6448)

STRUCTURAL ENGINEER
TREDO ENGINEERS
755 SENECA STREET, BUFFALO, NY 14210
(716)716.876.7147)

MEP.FP ENGINEER
BUFFALO ENGINEERING, P.C.
4245UNION ROAD, SUITE 204 BUFFALO, NY 14425
(716.633.5300)

CIVIL ENGINEER
TREDO ENGINEERS
755 SENECA STREET, BUFFALO, NY 14210
(716)716.876.7147)

STATE OF NEW YORK
BRIAN P. ZINTER
087670
LICENSED PROFESSIONAL ENGINEER

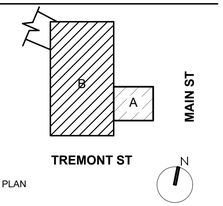

KEY PLAN

RIVIERA THEATRE AND
ORGAN PRESERVATION
SOCIETY

RIVIERA THEATRE GREEN ROOM

67 WEBSTER ST.
NORTH TONAWANDA, NY
14210

REV. #	DESCRIPTION	DATE

JOB NO.	2545
SCALE	AS NOTED ON PLAN
ISSUE DATE	10/21/2026
DRAWN BY	JRG
CHECKED BY	-

THIS IS A SINGLE SHEET OF A COHESIVE SET OF CONSTRUCTION DOCUMENTS (INCLUDING DRAWINGS AND SPECIFICATIONS). INTERPRETATION OF THE INFORMATION AS PRESENTED SHOULD BE BASED ON THE ENTIRE SET OF DOCUMENTS.

DRAWING TITLE
THEATRE BASEMENT PLAN - ELECTRICAL

E-101

100% CONSTRUCTION DOCUMENTS

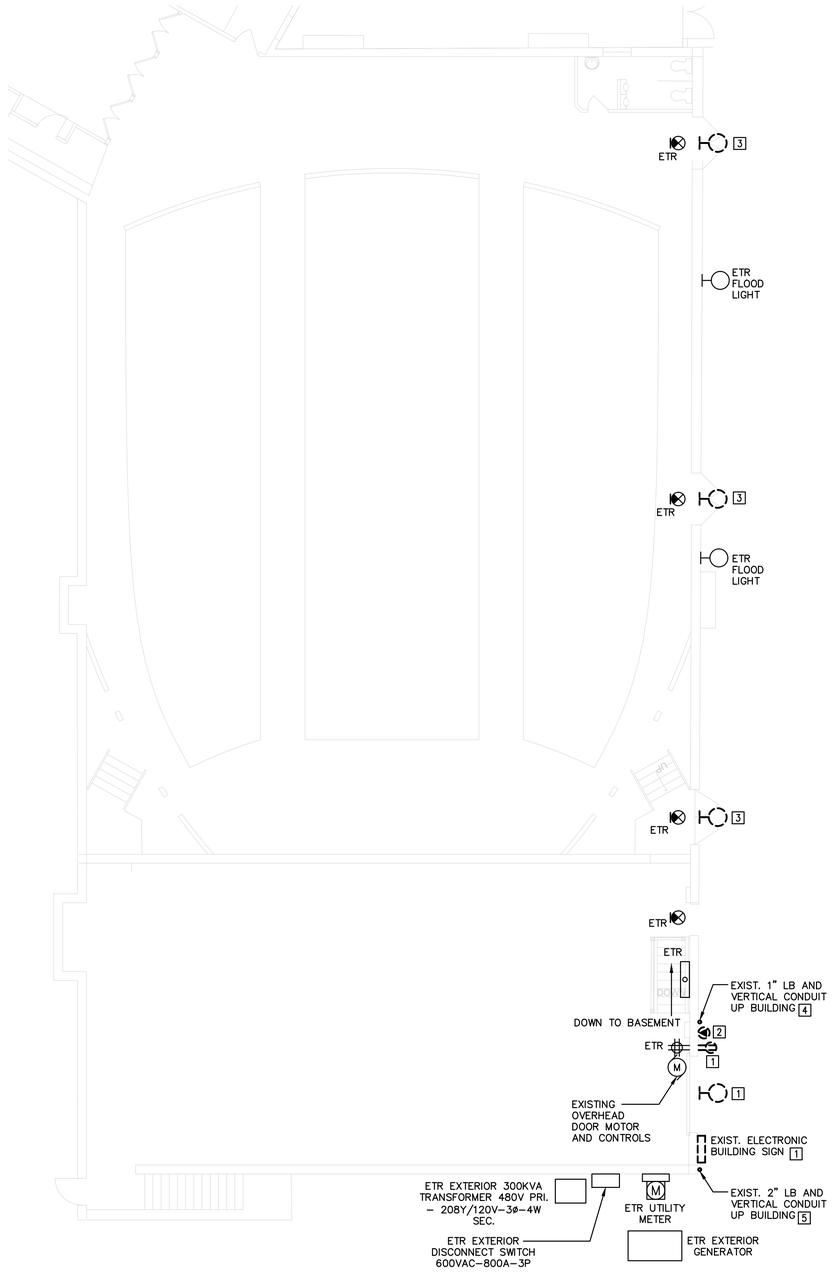

1 THEATRE FIRST FLOOR PLAN – ELECTRICAL DEMOLITION
SCALE: 1/8" = 1'–0"

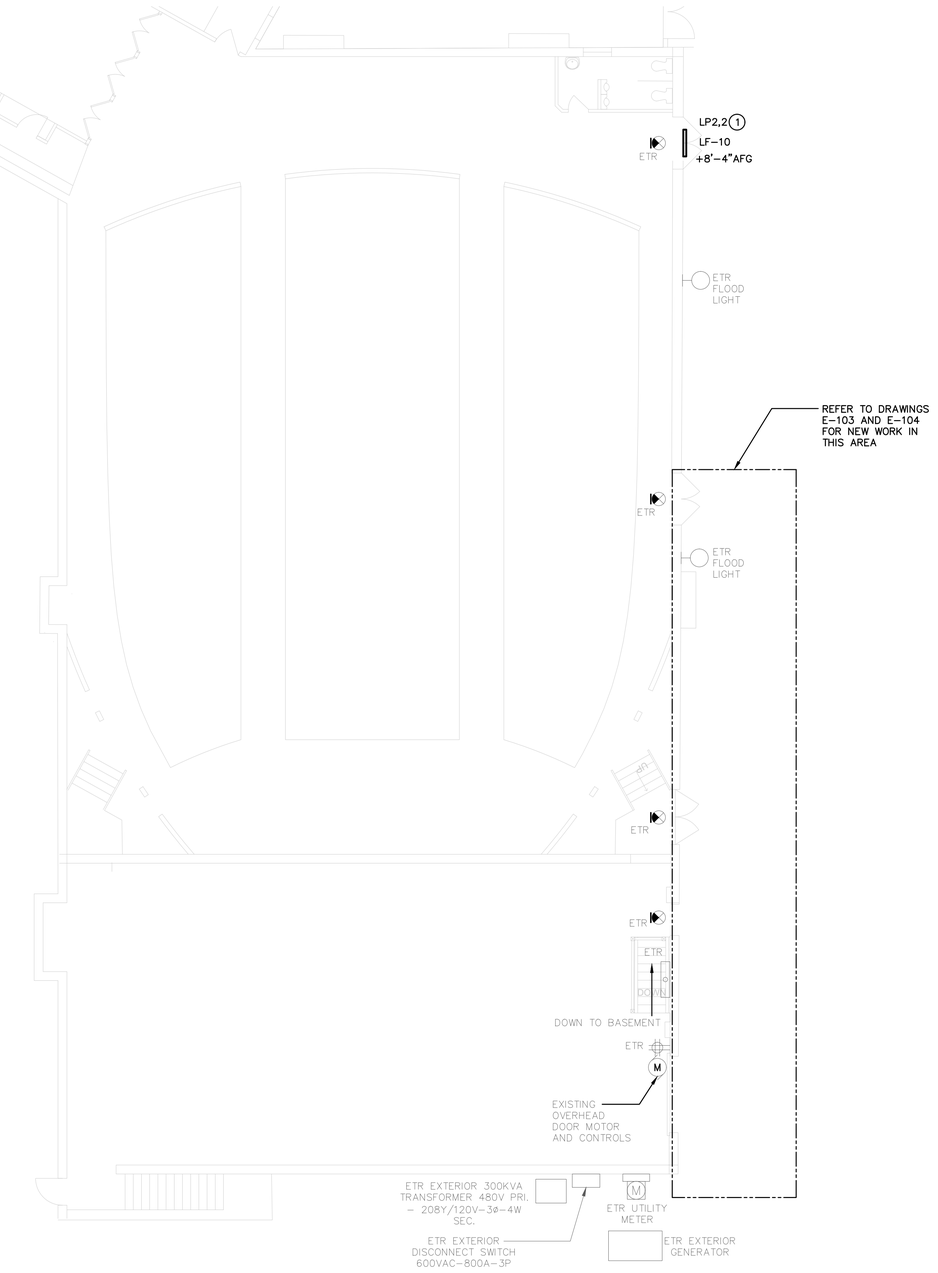

2 THEATRE FIRST FLOOR PLAN – ELECTRICAL NEW WORK
SCALE: 1/8" = 1'–0"

DEMOLITION PLAN NOTES:

1. EXISTING DUPLEX RECEPTACLE AND FLOOD LIGHT ABOVE DOOR TO BE REMOVED. EXISTING BUILDING SIGN TO BE RELOCATED. DISCONNECT AND REMOVE RECEPTACLE AND FLOOD LIGHT; DISCONNECT, REMOVE, STORE AND REINSTALL EXISTING ELECTRONIC BUILDING SIGN; MODIFY EXISTING BRANCH CIRCUIT CONDUIT (3/4") AND WIRING TO FEED EXISTING BUILDING SIGN IN NEW LOCATION. REFER TO E–103 AND E–104 FOR ADDITIONAL INFORMATION.
2. EXISTING NEMA 14–50R RECEPTACLE TO BE REMOVED. DISCONNECT AND REMOVE RECEPTACLE, REMOVE EXISTING BRANCH CIRCUIT CONDUIT AND WIRING BACK TO SOURCE. REFER TO DRAWING E–104 FOR ADDITIONAL INFORMATION.
3. EXISTING BUILDING MOUNTED LIGHT FIXTURE TO BE REMOVED. DISCONNECT AND REMOVE EXISTING BRANCH CIRCUIT CONDUIT AND WIRING BACK TO SOURCE. REFER TO DETAIL #2 ON THIS DRAWING AND DRAWING E–103 FOR NEW LIGHT FIXTURES AND BRANCH CIRCUIT REQUIREMENTS.
4. EXISTING 1" LB AND VERTICAL CONDUIT TO BE MODIFIED AS REQUIRED TO ACCOMMODATE NEW CONSTRUCTION AND MAINTAIN BRANCH CIRCUIT CONTINUITY TO DOWNSTREAM EQUIPMENT.
5. EXISTING 2" LB AND VERTICAL CONDUIT TO BE MODIFIED AS REQUIRED TO ACCOMMODATE NEW CONSTRUCTION AND MAINTAIN BRANCH CIRCUIT CONTINUITY TO DOWNSTREAM EQUIPMENT.

PLAN NOTES:

1. REFER TO DRAWING E–103 FOR CONTINUATION OF EXTERIOR LIGHTING BRANCH CIRCUIT AND DETAILS.

CJS ARCHITECTS
BUFFALO | ROCHESTER
www.cjsarchitects.com

ARCHITECT
CJS ARCHITECTS
755 SENECA STREET, BUFFALO, NY 14210
(716)716.856.6448)

STRUCTURAL ENGINEER
TREDO ENGINEERS
755 SENECA STREET, BUFFALO, NY 14210
(716)716.876.7147)

MEP.FP ENGINEER
BUFFALO ENGINEERING, P.C.
4245UNION ROAD, SUITE 204 BUFFALO, NY 14425
(716.633.5300)

CIVIL ENGINEER
TREDO ENGINEERS
755 SENECA STREET, BUFFALO, NY 14210
(716)716.876.7147)

STATE OF NEW YORK
BRIAN P ZINTE
099870
LICENSED PROFESSIONAL ENGINEER

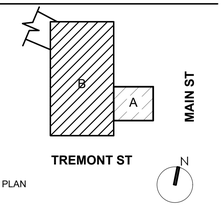

KEY PLAN

RIVIERA THEATRE AND ORGAN PRESERVATION SOCIETY

RIVIERA THEATRE GREEN ROOM

67 WEBSTER ST.
NORTH TONAWANDA, NY
14210

REV. #	DESCRIPTION	DATE

JOB NO.	2545
SCALE	AS NOTED ON PLAN
ISSUE DATE	10/21/2026
DRAWN BY	JRG
CHECKED BY	-

THIS IS A SINGLE SHEET OF A COHESIVE SET OF CONSTRUCTION DOCUMENTS (INCLUDING DRAWINGS AND SPECIFICATIONS). INTERPRETATION OF THE INFORMATION AS PRESENTED SHOULD BE BASED ON THE ENTIRE SET OF DOCUMENTS.

DRAWING TITLE

THEATRE FIRST FLOOR PLANS - ELECTRICAL

E-102

100% CONSTRUCTION DOCUMENTS

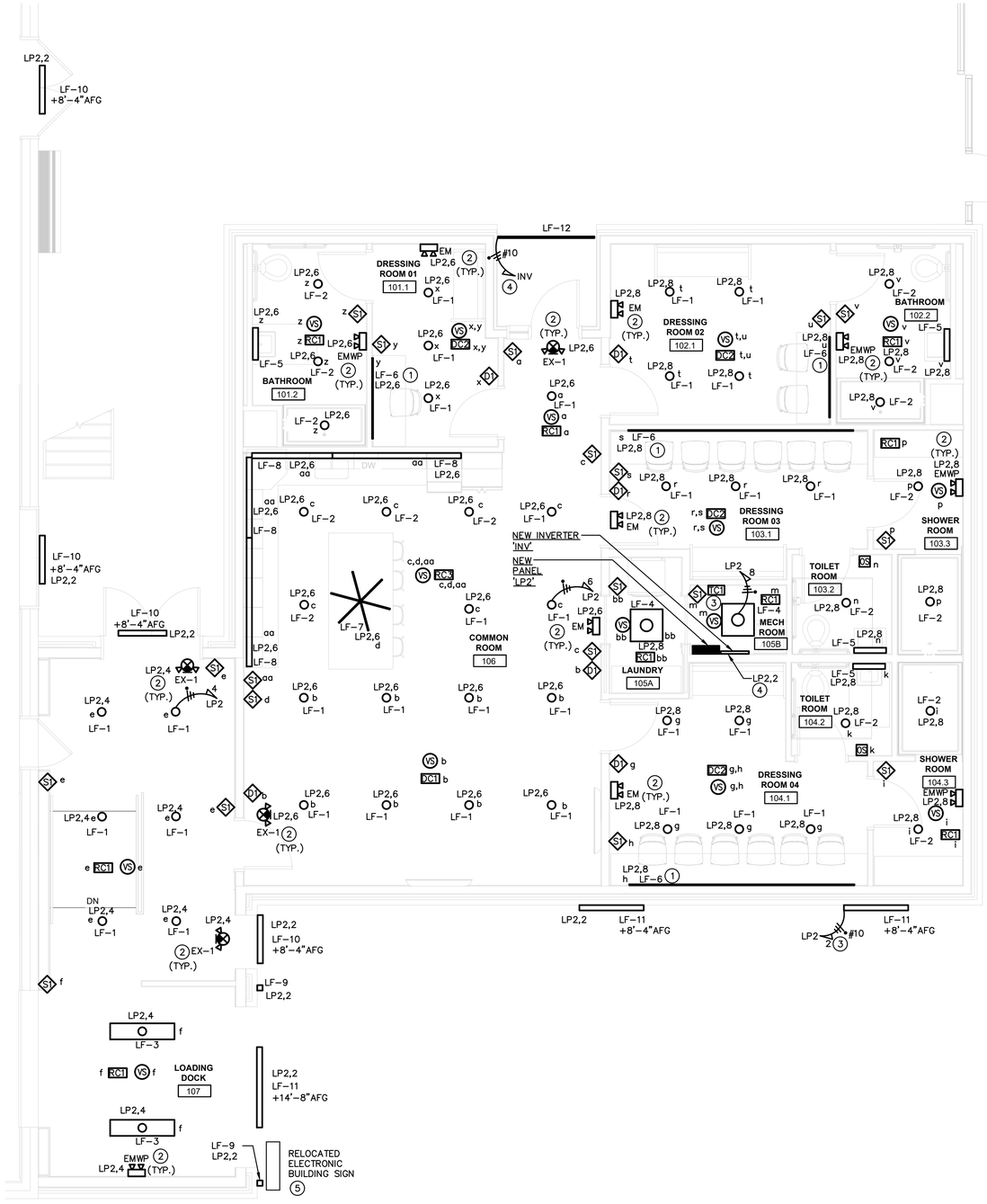

1 EXPANSION BUILDING PLAN – LIGHTING
SCALE: 1/4" = 1'-0"

PLAN NOTES:

1. REFER TO ARCHITECTURAL DRESSING ROOM ELEVATION PLANS FOR LED LIGHT STRIP INSTALLATION REQUIREMENTS OF LIGHT FIXTURE TYPE 'LF-6' AROUND DRESSING ROOM MIRROR. LIGHT STRIP FIXTURE TO BE INSTALLED ON TOP AND ON BOTH SIDES OF THE MIRROR. PROVIDE LENGTHS AS COORDINATED WITH ELEVATION PLANS AND MIRROR SHOP DRAWINGS.
2. WIRE EMERGENCY LIGHTING AND EXIT SIGNS INTO LOCAL BRANCH CIRCUIT AHEAD OF ALL LOCAL AND BUILDING CONTROLS, TYPICAL.
3. ROUTE EXTERIOR LIGHTING BRANCH CIRCUIT THROUGH CONTACTOR 'C1' AND PHOTOCELL/TIME CLOCK CONTROLS. CONTACTOR 'C1' TO BE ELECTRICALLY HELD, 3-POLE, 20 AMP, 120 VOLT RATED CONTACTS, 120 VOLT COIL IN NEMA 1 ENCLOSURE. SQUARE 'D' CLASS 8903 OR EQUAL. REFER TO TYPICAL EXTERIOR LIGHTING CONTROL DETAIL #3 ON THIS DRAWING.
4. ROUTE EXTERIOR LIGHTING FIXTURE CIRCUIT FROM EMERGENCY INVERTER THROUGH CONTACTOR 'C1' TO LIGHT FIXTURE. REFER TO TYPICAL EMERGENCY LIGHTING CONTROL DETAIL #2 ON THIS DRAWING FOR ADDITIONAL INFORMATION.
5. REINSTALL EXISTING ELECTRONIC BUILDING SIGN, CONFIRM ELEVATIONS WITH ARCHITECT/OWNER PRIOR TO INSTALLATION. MODIFY EXISTING BRANCH CIRCUIT CONDUIT, WIRING AND CONTROLS TO EXISTING ELECTRONIC BUILDING SIGN.

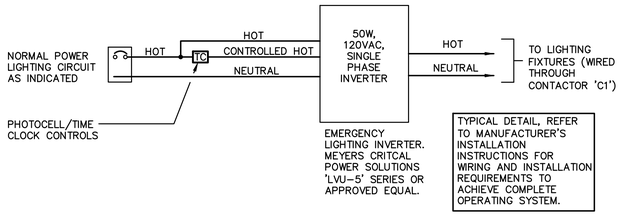

2 TYPICAL EMERGENCY INVERTER LIGHTING CONTROL DETAIL
SCALE: N.T.S.

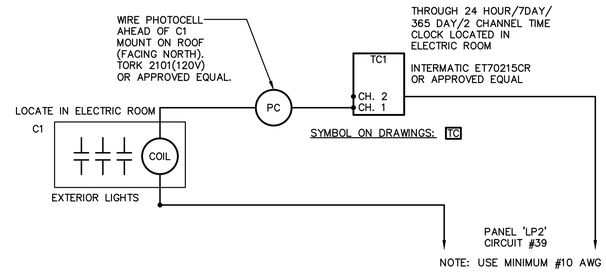

3 TYPICAL EXTERIOR LIGHTING CONTROL DETAIL
SCALE: N.T.S.

CJS ARCHITECTS
BUFFALO | ROCHESTER
www.cjsarchitects.com

ARCHITECT
CJS ARCHITECTS
755 SENECA STREET, BUFFALO, NY 14210
(716)716.856.6448)

STRUCTURAL ENGINEER
TREDO ENGINEERS
755 SENECA STREET, BUFFALO, NY 14210
(716)716.876.7147)

MEP.FP ENGINEER
BUFFALO ENGINEERING, P.C.
4245UNION ROAD, SUITE 204 BUFFALO, NY 14425
(716.633.5300)

CIVIL ENGINEER
TREDO ENGINEERS
755 SENECA STREET, BUFFALO, NY 14210
(716)716.876.7147)

STATE OF NEW YORK · BRIAN P. ZINDL · 089670 · LICENSED PROFESSIONAL ENGINEER

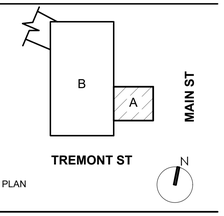

RIVIERA THEATRE AND ORGAN PRESERVATION SOCIETY

RIVIERA THEATRE GREEN ROOM

67 WEBSTER ST.
NORTH TONAWANDA, NY
14210

REV. #	DESCRIPTION	DATE

JOB NO.	2545
SCALE	AS NOTED ON PLAN
ISSUE DATE	10/21/2026
DRAWN BY	JRG
CHECKED BY	-

THIS IS A SINGLE SHEET OF A COHESIVE SET OF CONSTRUCTION DOCUMENTS (INCLUDING DRAWINGS AND SPECIFICATIONS). INTERPRETATION OF THE INFORMATION AS PRESENTED SHOULD BE BASED ON THE ENTIRE SET OF DOCUMENTS.

DRAWING TITLE

EXPANSION BUILDING PLAN - LIGHTING

E-103

100% CONSTRUCTION DOCUMENTS

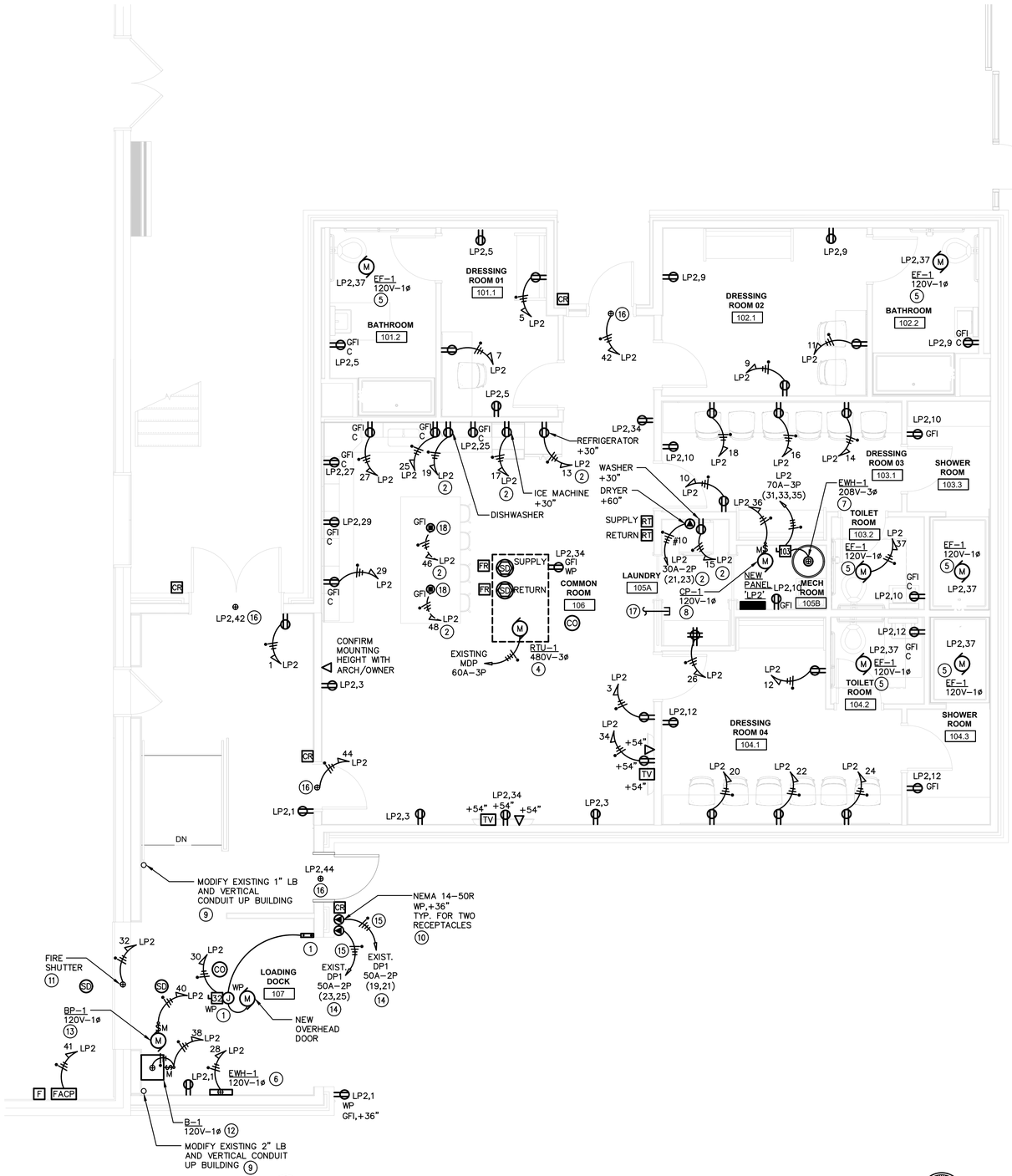

1 EXPANSION BUILDING PLAN – ELECTRICAL POWER AND SYSTEMS
SCALE: 1/4" = 1'-0"

PLAN NOTES:

1. PROVIDE CONDUIT, WIRING AND CONNECTIONS TO MOTORIZED OVERHEAD DOOR AND ALL MISCELLANEOUS CONNECTIONS INCLUDING BUT NOT LIMITED TO: DOOR MOTOR, PUSHBUTTON STATION, LIMIT SWITCHES, SAFETY EDGE SENSOR, PHOTO-ELECTRIC EYE, ETC. COORDINATE INSTALLATION REQUIREMENTS WITH OVERHEAD DOOR INSTALLER AND MANUFACTURER'S INSTRUCTIONS.
2. ROUTE TO GFCI CIRCUIT BREAKER IN PANELBOARD.
3. FURNISH AND INSTALL 30 AMP, 125/250 VOLT RATED NEMA 14-30R RECEPTACLE FOR ELECTRIC DRYER. PROVIDE MATCHING CORD AND PLUG, COORDINATE INSTALLATION WITH EQUIPMENT MANUFACTURER'S INSTRUCTIONS PRIOR TO ORDERING ELECTRICAL EQUIPMENT. PROVIDE 3 #10 AWG & 1 #10 AWG GROUND IN 3/4" C. FROM RECEPTACLE TO PANEL.
4. RECEIVE AND INSTALL DISCONNECT SWITCH ON ROOFTOP UNIT EQUIPMENT. PROVIDE CONNECTION TO ROOFTOP EQUIPMENT THROUGH DISCONNECT SWITCH, SEE DETAIL #2 ON THIS PLAN FOR ADDITIONAL INFORMATION.
5. RECEIVE AND INSTALL DISCONNECT SWITCH ON EXHAUST FAN EQUIPMENT. PROVIDE CONNECTION TO EXHAUST FAN THROUGH DISCONNECT SWITCH.
6. PROVIDE BRANCH CIRCUIT CONDUIT AND WIRING TO FACTORY INSTALLED DISCONNECT SWITCH ON ELECTRIC WALL HEATER.
7. PROVIDE 100A, 3-POLE HEAVY DUTY DISCONNECT SWITCH ON WALL TO FEED ELECTRIC WATER HEATER. PROVIDE CONNECTION TO ELECTRIC WATER HEATER EQUIPMENT THROUGH DISCONNECT SWITCH.
8. PROVIDE 120VAC, SINGLE POLE DISCONNECT SWITCH ON CIRCULATION PUMP EQUIPMENT. PROVIDE CONNECTION TO CIRC. PUMP THROUGH DISCONNECT SWITCH.
9. MODIFY EXISTING BRANCH CIRCUIT CONDUIT AND WIRING ROUTED UP THE BUILDING TO ACCOMMODATE NEW CONSTRUCTION WHILE MAINTAINING BRANCH CIRCUIT CONTINUITY TO EQUIPMENT.
10. PROVIDE NEW 50A BUS SHORE POWER RECEPTACLES MOUNTED NEXT TO LOADING DOCK DOOR. CONFIRM LOCATIONS WITH OWNER PRIOR TO INSTALLATIONS.
11. PROVIDE FIRE ALARM CONTROL RELAYS, SMOKE DETECTOR DEVICES, WIRING, PROGRAMMING, ETC. REQUIRED FOR FIRE SHUTTER DOOR RELEASE.
12. PROVIDE 120VAC, SINGLE POLE DISCONNECT SWITCH ON SNOW MELT BOILER EQUIPMENT. PROVIDE CONNECTION TO BOILER THROUGH DISCONNECT SWITCH.
13. PROVIDE 120VAC, SINGLE POLE DISCONNECT SWITCH ON SNOW MELT BOILER PUMP EQUIPMENT. PROVIDE CONNECTION TO BOILER PUMP THROUGH DISCONNECT SWITCH.
14. PROVIDE NEW CIRCUIT BREAKER IN EXISTING PANEL SPARE SPACE. CIRCUIT BREAKER SHALL BE LISTED FOR USE IN EXISTING PANEL AND MATCH AIC RATINGS.
15. PROVIDE NEW BRANCH CIRCUIT WITH 3 #6 & 1 #10 GND. IN 1" C.
16. PROVIDE NEW 120VAC BRANCH CIRCUIT IN ACCESSIBLE CEILING SPACE ABOVE ACCESS DOOR. COORDINATE LOCATIONS AND FINAL TERMINATION REQUIREMENTS WITH OWNER'S SECURITY ACCESS VENDOR PRIOR TO INSTALLATION.
17. PROVIDE 4" EMPTY CONDUIT W/ BUSHINGS AND PULLWIRE ROUTED FROM BASEMENT ELECTRIC ROOM STUBBED INTO ACCESSIBLE CEILING SPACE ABOVE LAUNDRY ROOM TO PROVIDE A PATHWAY FOR LOW VOLTAGE CABLES. SEE DRAWING E-101 FOR LOCATION OF EXISTING BASEMENT ELECTRICAL ROOM.
18. PROVIDE FLUSH MOUNT COUNTERTOP POP-UP RECEPTACLE RATED FOR 20A, WITH TAMPER-RESISTANT DUPLEX RECEPTACLE. COUNTERTOP RECEPTACLE SHALL BE LISTED FOR COUNTERTOP APPLICATIONS PER NEC REQUIREMENTS. PROVIDE AS MANUFACTURED BY HUBBELL #RCT220 SERIES OR APPROVED EQUAL.

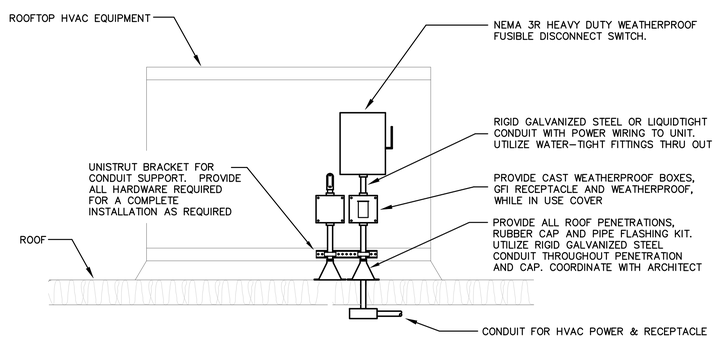

NOTE:
THE CONTRACTOR SHALL BE RESPONSIBLE TO COORDINATE LOCATION OF CONDUITS IN FIELD WITH THE MECHANICAL EQUIPMENT INSTALLER PRIOR TO INSTALLATION. DO NOT INSTALL RACEWAY WITHIN THE UNIT UNLESS IT HAS BEEN VERIFIED AND FIELD COORDINATED WITH THE MECHANICAL EQUIPMENT INSTALLER OR LOCAL FACTORY REPRESENTATIVE.

2 TYPICAL ROOFTOP UNIT DETAIL
SCALE: NONE

CJS ARCHITECTS
BUFFALO | ROCHESTER
www.cjsarchitects.com

ARCHITECT
CJS ARCHITECTS
755 SENECA STREET, BUFFALO, NY 14210
(716)716.856.6448

STRUCTURAL ENGINEER
TREDO ENGINEERS
755 SENECA STREET, BUFFALO, NY 14210
(716)716.876.7147

MEP.FP ENGINEER
BUFFALO ENGINEERING, P.C.
4245UNION ROAD, SUITE 204 BUFFALO, NY 14425
(716.633.5300)

CIVIL ENGINEER
TREDO ENGINEERS
755 SENECA STREET, BUFFALO, NY 14210
(716)716.876.7147

STATE OF NEW YORK
BRIAN P. ZINTO
088670
LICENSED PROFESSIONAL ENGINEER

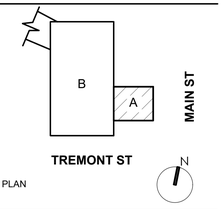

KEY PLAN

RIVIERA THEATRE AND ORGAN PRESERVATION SOCIETY

RIVIERA THEATRE GREEN ROOM

67 WEBSTER ST.
NORTH TONAWANDA, NY
14210

REV. #	DESCRIPTION	DATE

JOB NO.	2545
SCALE	AS NOTED ON PLAN
ISSUE DATE	10/21/2026
DRAWN BY	JRG
CHECKED BY	-

THIS IS A SINGLE SHEET OF A COHESIVE SET OF CONSTRUCTION DOCUMENTS (INCLUDING DRAWINGS AND SPECIFICATIONS). INTERPRETATION OF THE INFORMATION AS PRESENTED SHOULD BE BASED ON THE ENTIRE SET OF DOCUMENTS.

DRAWING TITLE

EXPANSION BUILDING PLAN - ELECTRICAL POWER AND SYSTEMS

E-104

100% CONSTRUCTION DOCUMENTS

LIGHTING FIXTURE SCHEDULE

[REFER TO LIGHTING FIXTURE SCHEDULE GENERAL NOTES ON THIS DRAWING FOR ADDITIONAL INFORMATION]

FIXTURE ID	DESCRIPTION	MOUNTING	LENS/DIFFUSER	VOLTAGE/ BALLAST	LUMENS/WATTAGE	MANUFACTURER & CATALOG NO.	NOTES/REMARKS
LF1	6" WET LOCATION AND IC RATED LED LENSED DOWNLIGHT FIXTURE	RECESSED CEILING	INTEGRAL DIFFUSE LENS	UNV/LED 0–10VDC DIMMING DRIVER	1,000LMS/10.0W 3500'K	HALO LIGHTING 'HC6–HM6–61–MD–C–10–D010–835' SERIES OR APPROVED EQUAL.	
LF2	6" WET LOCATION AND IC RATED LED LENSED DOWNLIGHT FIXTURE	RECESSED CEILING	INTEGRAL DIFFUSE LENS	UNV/LED 0–10VDC DIMMING DRIVER	2,000LMS/21.0W 3500'K	HALO LIGHTING 'HC6–HM6–61–MD–C–20–D010–835' SERIES OR APPROVED EQUAL.	
LF3	4'–0" LED LINEAR LOW–BAY LENSED FIXTURE	SUSPENSION MOUNTED FROM CEILING APPROXIMATELY 15'–0" AFF	FROSTED FLAT LENS	UNV/LED 0–10VDC DIMMING DRIVER	7,000LMS/51.8W 3500'K	METALUX LIGHTING '4MB–7HL–FLT–UNV–L835' SERIES OR APPROVED EQUAL.	PROVIDE SUSPENSION STEM SET WITH FIXED STEMS, POWER FEED, CANOPY, END CAPS, ETC FOR FULLY OPERATION LIGHTING SOLUTION.
LF4	2'x2' RECESSED LED FLAT PANEL LIGHT FIXTURE	RECESSED CEILING	FROSTED	UNV/LED 0–10VDC DIMMING DRIVER	4,500LMS/37.5W 3500'K	METALUX LIGHTING '22CGTX–45–L835' SERIES OR APPROVED EQUAL.	
LF5	24" WALL MOUNTED LED MIRROR LIGHT FIXTURE	SURFACE WALL MOUNTED ABOVE MIRROR	FROSTED	UNV/LED DRIVER	1,100LMS/18.0W 3500'K	BLACKJACK LIGHTING 'VEC–24V–SN–35K' SERIES OR APPROVED EQUAL.	COLOR FINISH AS SELECTED BY ARCHITECT/OWNER.
LF6	WALL MOUNTED LED MIRROR LIGHT FIXTURE WITH ALUMINUM CHANNEL AND VERY HIGH CRI (99 CRI) OUTPUT	SURFACE WALL MOUNTED ABOVE AND AROUND MIRROR, REFER TO ARCHITECTURAL INTERIOR ELEVATIONS FOR ADDITIONAL INFORMATION	PROVIDE ALUMINUM FLAT CHANNEL WITH HIGH LIGHT TRANSMISSION DIFFUSER LENS	PROVIDE 120VAC, 24VDC DRIVER(S) AS REQUIRED MOUNTED REMOTE IN ACCESSIBLE SPACE AS FIELD COORDINATED WITH ARCH/OWNER	375LMS/FT 4.2W/FT 6500'K 99CRI	WAVEFORM LIGHTING 'ABSOLUTE SERIES LED FLEXIBLE STRIP #7102' SERIES OR APPROVED EQUAL.	PROVIDE ALUMINUM MOUNTING CHANNEL WITH HIGH LIGHT TRANSMISSION DIFFUSER LENS, MOUNTING CLIPS, END CAPS, CONTINUOUS ROW SOLDERED CONNECTIONS, POWER CONNECTORS, REMOTE DRIVERS, ETC. AS REQUIRED FOR FULLY OPERATIONAL LIGHTING SOLUTION. COORDINATE EXACT LOCATION OF REMOTE DRIVERS IN FIELD IN A CONCEALED ACCESSIBLE SPACE. COLOR FINISH AS SELECTED BY ARCHITECT/OWNER.
LF7	LINEAR 3–HEAD PENDANT MOUNT LED LIGHT FIXTURE OVER ISLAND	PENDANT MOUNTED OVER KITCHEN ISLAND AT APPROX. 8'–0" AFF	WHITE ACRYLIC LENS	120VAC LED DRIVER	6237LMS 69W 3500'K	KUZCO LIGHTING 'VEGA MINOR MP18203' SERIES OR APPROVED EQUAL.	PROVIDE SUSPENSION MOUNTING ASSEMBLY WITH CANOPY. COLOR FINISH AS SELECTED BY ARCHITECT/OWNER.
LF8	UNDER CABINET LED LIGHTING WITH ALUMINUM EXTRUDED HOUSING	UNDER CABINET, SEE ARCHITECTURAL PLANS FOR DETAILS	FROSTED LENS	UNV/LED 0–10VDC DIMMING DRIVER	576LMS/FT 6W/FT 3500'K	ALUZ LIGHTING 'A1–ZADY–STN–F–35K–6W–10V–DAMP–UNV' SERIES OR APPROVED EQUAL.	PROVIDE POWER CONNECTORS, END CAPS, JUMPER CABLES, ETC FOR FULLY OPERATIONAL LIGHTING SOLUTION. COLOR FINISH AS SELECTED BY ARCHITECT/OWNER.
LF9	EXTERIOR 38" LINEAR VERTICAL WALL MOUNTED LED FIXTURE WITH STEEL HOUSING	WALL MOUNTED NEXT TO LOADING DOCK OVERHEAD DOOR, SEE ARCHITECTURAL ELEVATIONS FOR MOUNTING HEIGHTS	FROSTED WHITE ACRYLIC LENS	UNV/LED DRIVER	3,630LMS/27.0W 4000'K	LIGHTWAY LIGHTING 'NECW–438–LED–03C–4–BB10' SERIES OR APPROVED EQUAL.	PROVIDE WITH EMERGENCY BATTERY BACKUP CAPABLE OF OPERATING THE LIGHT FIXTURE FOR A MINIMUM OF 90 MINUTES DURING A POWER OUTAGE. COLOR FINISH AS SELECTED BY ARCHITECT/OWNER.
LF10	EXTERIOR 36" LINEAR HORIZONTAL WALL MOUNTED LED FIXTURE WITH STEEL HOUSING	WALL MOUNTED OVER DOOR, SEE PLANS FOR MOUNTING HEIGHTS	FROSTED WHITE ACRYLIC LENS	UNV/LED DRIVER	3,630LMS/27.0W 4000'K	LIGHTWAY LIGHTING 'PDLW–36–LED–03C–4–WFA–BB10' SERIES OR APPROVED EQUAL.	PROVIDE WITH EMERGENCY BATTERY BACKUP CAPABLE OF OPERATING THE LIGHT FIXTURE FOR A MINIMUM OF 90 MINUTES DURING A POWER OUTAGE. COLOR FINISH AS SELECTED BY ARCHITECT/OWNER.
LF11	EXTERIOR 48" LINEAR HORIZONTAL WALL MOUNTED LED FIXTURE WITH STEEL HOUSING	WALL MOUNTED OVER DOOR, SEE PLANS FOR MOUNTING HEIGHTS	FROSTED WHITE ACRYLIC LENS	UNV/LED DRIVER	4,840LMS/36.0W 4000'K	LIGHTWAY LIGHTING 'PDLW–36–LED–03C–4–WFA–BB10' SERIES OR APPROVED EQUAL.	PROVIDE WITH EMERGENCY BATTERY BACKUP CAPABLE OF OPERATING THE LIGHT FIXTURE FOR A MINIMUM OF 90 MINUTES DURING A POWER OUTAGE. COLOR FINISH AS SELECTED BY ARCHITECT/OWNER.
LF12	EXTERIOR 6'–0" LINEAR RESSED LED FIXTURE	RECESSED, METAL CANOPY CEILING	FROSTED WHITE ACRYLIC LENS	UNV/LED DRIVER MOUNTED REMOTE INDOOR ACCESSIBLE SPACE	432LMS/FT 4W/FT 4000'K	ALUZ LIGHTING 'A2–ZOHE–RCD–F–4W–10V–40K–6'0"–WET' SERIES OR APPROVED EQUAL.	PROVIDE WET LOCATION POWER CONNECTORS, LIGHT FIXTURE END CAPS, REMOTE DRIVERS, ETC. AS REQUIRED FOR FULLY OPERATIONAL LIGHTING SOLUTION. COORDINATE EXACT LOCATION OF REMOTE DRIVERS IN FIELD IN A CONCEALED INDOOR ACCESSIBLE SPACE.
EX1	DIE CAST ALUMINUM LED EMERGENCY EXIT SIGN WITH EMERGENCY LIGHT HEADS	UNIVERSAL	DIE CAST ALUMINUM, COLOR FINISH AS SELECTED BY ARCH/OWNER	120/277VAC INPUT	TWO (2) 3W LED EMERGENCY LAMP HEADS 4.8W MAX EXIT SIGN	EVENLITE LIGHTING 'TDCOM–R–U' SERIES OR APPROVED EQUAL.	FINISH AS SELECTED BY ARCHITECT/OWNER. PROVIDE WITH NICKEL CADMIUM BATTERY BACKUP CAPABLE OF OPERATING THE EXIT SIGN AND EMERGENCY LIGHTS FOR A MINIMUM OF 90 MINUTES DURING A POWER OUTAGE.
EM	EMERGENCY BATTERY UNIT WITH THERMOPLASTIC HOUSING.	WALL MOUNTED AT APPROX. 7'–6" AFF	THERMOPLASTIC HOUSING	120/277VAC INPUT	TWO (2) 3W LED EMERGENCY LAMP HEADS	EVENLITE LIGHTING 'TEBL3–SD' SERIES OR APPROVED EQUAL.	FINISH AS SELECTED BY ARCHITECT/OWNER. PROVIDE WITH TWO LED HEADS AND LITHIUM IRON PHOSPHATE BATTERY BACKUP CAPABLE OF OPERATING THE EMERGENCY BATTERY HEAD UNIT FOR A MINIMUM OF 90 MINUTES DURING A POWER OUTAGE. PROVIDE WITH SELF DIAGNOSTIC SYSTEM.
EMWP	EMERGENCY BATTERY UNIT WITH THERMOPLASTIC HOUSING AND WET LOCATION CLEAR COVER	WALL MOUNTED AT APPROX. 7'–6" AFF	THERMOPLASTIC HOUSING WITH WET LOCATION CLEAR COVER	120/277VAC INPUT	TWO (2) 3W LED EMERGENCY LAMP HEADS	EVENLITE LIGHTING 'TEBL3–SD' AND 'VRWP' SERIES OR APPROVED EQUAL.	FINISH AS SELECTED BY ARCHITECT/OWNER. PROVIDE WITH TWO LED HEADS AND LITHIUM IRON PHOSPHATE BATTERY BACKUP CAPABLE OF OPERATING THE EMERGENCY BATTERY HEAD UNIT FOR A MINIMUM OF 90 MINUTES DURING A POWER OUTAGE. PROVIDE WITH SELF DIAGNOSTIC SYSTEM.

LIGHTING FIXTURE SCHEDULE GENERAL NOTES:

1. VERIFY FINAL FIXTURE COLORS WITH ARCHITECT PRIOR TO PURCHASING FIXTURES.
2. PROVIDE LIGHTING FIXTURES THAT ARE LISTED, LABELED AND APPROVED BY UNDERWRITERS LABORATORIES INC. FOR USE WITH THE SPECIFIED CEILING TYPE AND RATING. COORDINATE WITH ARCHITECTURAL DRAWINGS, REFLECTED CEILING PLANS AND FIELD VERIFICATION OF EXISTING CEILING TYPES AND CONDITIONS BY CONTRACTOR.
3. PROVIDE ALL REQUIRED MOUNTING HARDWARE FOR A COMPLETE INSTALLATION.
4. FOR ALL LIGHTING FIXTURES, PROVIDE TRIM KITS AS REQUIRED. COORDINATE EXACT REQUIREMENTS WITH ARCH. REFLECTED CEILING PLAN FOR GYP BOARD/GRID CEILING PLACEMENTS. FOR EXISTING CEILINGS FIELD VERIFY TYPES PRIOR TO PURCHASE.
5. ALL LED FIXTURES PROVIDED MUST BE LISTED ON A 'DESIGN LIGHTS CONSORTIUM' (DLC) OR 'ENERGYSTAR' QUALIFIED LIST.
6. COORDINATE FINAL EXTERIOR WALL MOUNT LIGHTING FIXTURE HEIGHTS WITH ARCHITECT PRIOR TO ROUGH–IN UNLESS OTHERWISE INDICATED ON DRAWINGS.

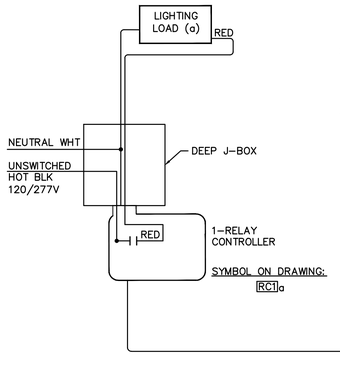

TYPICAL NOTES:
1. FOLLOW MANUFACTURER INSTRUCTIONS FOR PROPER PRODUCT PLACEMENT, INSTALLATION, WIRING AND OPERATION.
2. DIAGRAM IS TYPICAL FOR SPACE TYPE. PROVIDE PROPER QUANTITY AND TYPE OF OCCUPANCY SENSORS, SWITCHES, ROOM CONTROLLERS, DAYLIGHTING SENSORS, ETC., PER CODE REQUIREMENT FOR EACH SPACE.
3. COORDINATE LOCAL LIGHTING NETWORK CABLE REQUIREMENTS INCLUDING SPLITTERS AND COUPLERS WITH MANUFACTURER AS REQUIRED TO CONNECT LIGHTING CONTROL DEVICES.

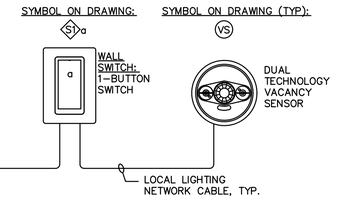

SEQUENCE OF OPERATIONS:
1. GENERAL LIGHTING (a) AUTO ON TO 50% WHEN OCCUPANCY DETECTED.
2. MANUAL ON/OFF CONTROL OF GENERAL LIGHTING (a) WITH WALL SWITCH.
3. AUTO OFF ALL LIGHTING WITHIN 20 MINUTES OF OCCUPANTS LEAVING.

1 TYPICAL ONE RELAY WALL SWITCH LIGHTING CONTROL DETAIL

SCALE: N.T.S.

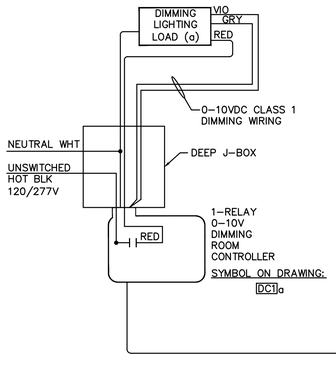

TYPICAL NOTES:
1. FOLLOW MANUFACTURER INSTRUCTIONS FOR PROPER PRODUCT PLACEMENT, INSTALLATION, WIRING AND OPERATION.
2. DIAGRAM IS TYPICAL FOR SPACE TYPE. PROVIDE PROPER QUANTITY AND TYPE OF OCCUPANCY SENSORS, SWITCHES, ROOM CONTROLLERS, DAYLIGHTING SENSORS, ETC., PER CODE REQUIREMENT FOR EACH SPACE.
3. COORDINATE LOCAL LIGHTING NETWORK CABLE REQUIREMENTS INCLUDING SPLITTERS AND COUPLERS WITH MANUFACTURER AS REQUIRED TO CONNECT LIGHTING CONTROL DEVICES.

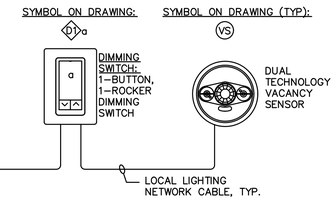

SEQUENCE OF OPERATIONS:
1. GENERAL LIGHTING (a) AUTO ON TO 50% WHEN OCCUPANCY DETECTED.
2. MANUAL ON/OFF/DIMMING CONTROL OF GENERAL LIGHTING (a) WITH WALL DIMMER SWITCH.
3. AUTO OFF ALL LIGHTING WITHIN 20 MINUTES OF OCCUPANTS LEAVING.

2 TYPICAL ONE RELAY DIMMER LIGHTING CONTROL DETAIL

SCALE: N.T.S.

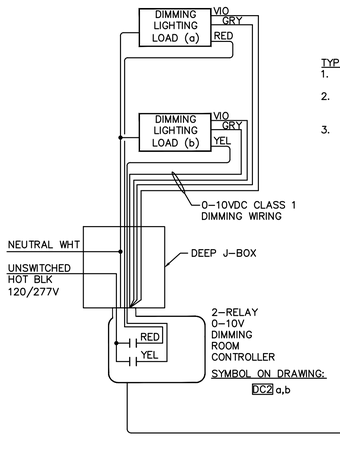

TYPICAL NOTES:
1. FOLLOW MANUFACTURER INSTRUCTIONS FOR PROPER PRODUCT PLACEMENT, INSTALLATION, WIRING AND OPERATION.
2. DIAGRAM IS TYPICAL FOR SPACE TYPE. PROVIDE PROPER QUANTITY AND TYPE OF OCCUPANCY SENSORS, SWITCHES, ROOM CONTROLLERS, DAYLIGHTING SENSORS, ETC., PER CODE REQUIREMENT FOR EACH SPACE.
3. COORDINATE LOCAL LIGHTING NETWORK CABLE REQUIREMENTS INCLUDING SPLITTERS AND COUPLERS WITH MANUFACTURER AS REQUIRED TO CONNECT LIGHTING CONTROL DEVICES.

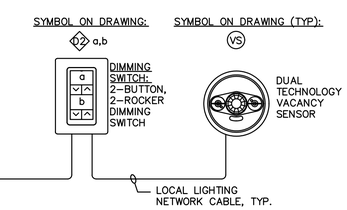

SEQUENCE OF OPERATIONS:
1. GENERAL LIGHTING (a) AUTO ON TO 50% WHEN OCCUPANCY DETECTED.
2. MANUAL ON/OFF/DIMMING CONTROL OF GENERAL LIGHTING (a) and (b) WITH WALL DIMMER SWITCH.
3. AUTO OFF ALL LIGHTING WITHIN 20 MINUTES OF OCCUPANTS LEAVING.

3 TYPICAL TWO RELAY DIMMER LIGHTING CONTROL DETAIL

SCALE: N.T.S.

CJS ARCHITECTS
BUFFALO | ROCHESTER
www.cjsarchitects.com

ARCHITECT
CJS ARCHITECTS
755 SENECA STREET, BUFFALO, NY 14210
(716)716.856.6448)

STRUCTURAL ENGINEER
TREDO ENGINEERS
755 SENECA STREET, BUFFALO, NY 14210
(716)716.876.7147)

MEP.FP ENGINEER
BUFFALO ENGINEERING, P.C.
4245UNION ROAD, SUITE 204 BUFFALO, NY 14425
(716.633.5300)

CIVIL ENGINEER
TREDO ENGINEERS
755 SENECA STREET, BUFFALO, NY 14210
(716)716.876.7147)

STATE OF NEW YORK
BRIAN P. ZINTEL
089670
LICENSED PROFESSIONAL ENGINEER

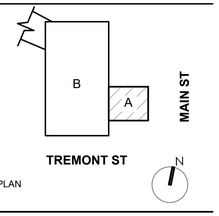

KEY PLAN

RIVIERA THEATRE AND ORGAN PRESERVATION SOCIETY

RIVIERA THEATRE GREEN ROOM

67 WEBSTER ST.
NORTH TONAWANDA, NY
14210

REV. #	DESCRIPTION	DATE

JOB NO.	2545
SCALE	NTS
ISSUE DATE	10/21/2026
DRAWN BY	JRG
CHECKED BY	-

THIS IS A SINGLE SHEET OF A COHESIVE SET OF CONSTRUCTION DOCUMENTS (INCLUDING DRAWINGS AND SPECIFICATIONS). INTERPRETATION OF THE INFORMATION AS PRESENTED SHOULD BE BASED ON THE ENTIRE SET OF DOCUMENTS.

DRAWING TITLE

ELECTRICAL LIGHTING SCHEDULE

E-200

100% CONSTRUCTION DOCUMENTS

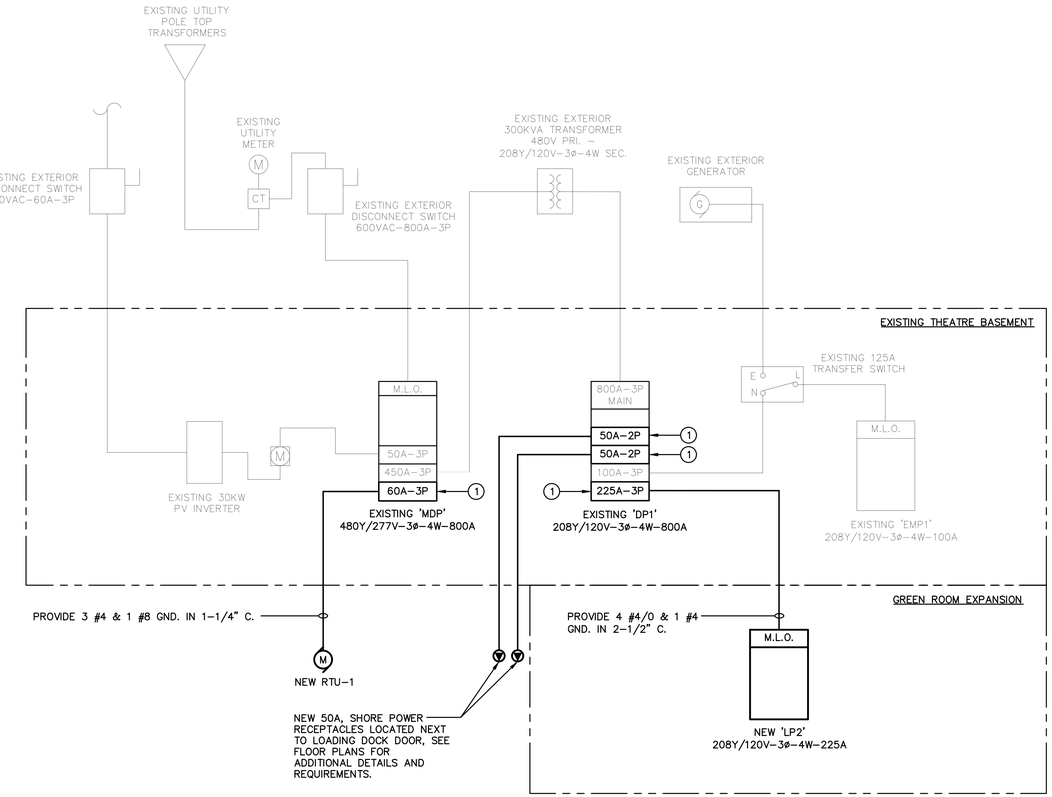

1 SINGLE LINE DIAGRAM
SCALE: N.T.S.

SINGLE LINE DIAGRAM NOTES:

1. PROVIDE NEW CIRCUIT BREAKER IN EXISTING PANEL. NEW CIRCUIT BREAKER SHALL BE LISTED FOR USE IN EXISTING PANEL AND MATCH EXISTING AIC RATINGS.

PANELBOARD SCHEDULE

LP2 — 208Y/120 VOLTS, 3 ø, 4 WIRE, 72 CIRCUITS, LUGS ONLY
225 AMP. MAINS, 22 KAIC, SURFACE MOUNTING, MAIN BRKR.

	DESCRIPTION	BRKR.	L1	L2	L3	BRKR.	DESCRIPTION	
1	LOADING DOCK RECEPTS.	20A–1P				20A–1P	EXTERIOR BLDG LTS	2
3	COMMON RM RECEPTS.	20A–1P				20A–1P	LADING DOCK LTS	4
5	DRESSING RM 01 RECEPTS.	20A–1P				20A–1P	COMMON RM LTS	6
7	DRESSING RM 01 RECEPTS.	20A–1P				20A–1P	DRESSING RM LTS	8
9	DRESSING RM 02 RECEPTS.	20A–1P				20A–1P	DRESSING RM 03 RECEPTS	10
11	DRESSING RM 02 RECEPTS.	20A–1P				20A–1P	DRESSING RM 04 RECEPTS	12
13	REFRIGERATOR	20A–1P*				20A–1P	DRESSING RM 03 RECEPTS	14
15	WASHING MACHINE	20A–1P*				20A–1P	DRESSING RM 03 RECEPTS	16
17	ICE MACHINE	20A–1P*				20A–1P	DRESSING RM 03 RECEPTS	18
19	DISHWASHER	20A–1P*				20A–1P	DRESSING RM 04 RECEPTS	20
21	ELECTRIC	30A*				20A–1P	DRESSING RM 04 RECEPTS	22
23	DRYER	2P				20A–1P	DRESSING RM 04 RECEPTS	24
25	KITCHEN COUNTER RECEPT	20A–1P				20A–1P	AV ROOM QUAD RECEPT	26
27	KITCHEN COUNTER RECEPT	20A–1P				20A–1P	LOADING DOCK WALL HEATER	28
29	KITCHEN COUNTER RECEPT	20A–1P				20A–1P	LOADING DOCK OVERHEAD DOOR	30
31	ELECTRIC	70A 3P				20A–1P	LOADING DOCK FIRE SHUTTER	32
33	WATER					20A–1P	COMMON RM RECEPTS	34
35	HEATER					20A–1P	CP–1	36
37	BATHROOM EF's	20A–1P				15A–1P	B–1 (SNOW MELT)	38
39	TIME CLOCK	20A–1P				15A–1P	BP–1 (SNOW MELT)	40
41	FACP	20A–1P				20A–1P	ACCESS DOOR POWER	42
43						20A–1P	ACCESS DOOR POWER	44
45						20A–1P*	KITCHEN ISLAND RECEPT.	46
47						20A–1P*	KITCHEN ISLAND RECEPT.	48
49						20A–1P	SPARE	50
51						20A–1P	SPARE	52
53						20A–1P	SPARE	54
55						20A–1P	SPARE	56
57						20A–1P	SPARE	58
59						20A–1P	SPARE	60
61						20A–1P	SPARE	62
63						20A–1P	SPARE	64
65						20A–1P	SPARE	66
67						20A–1P	SPARE	68
69						20A–1P	SPARE	70
71						20A–1P	SPARE	72

* INDICATES GFCI TYPE CIRCUIT BREAKER

CJS ARCHITECTS
BUFFALO | ROCHESTER
www.cjsarchitects.com

ARCHITECT
CJS ARCHITECTS
755 SENECA STREET, BUFFALO, NY 14210
(716)716.856.6448)

STRUCTURAL ENGINEER
TREDO ENGINEERS
755 SENECA STREET, BUFFALO, NY 14210
(716)716.876.7147)

MEP.FP ENGINEER
BUFFALO ENGINEERING, P.C.
4245UNION ROAD, SUITE 204 BUFFALO, NY 14425
(716.633.5300)

CIVIL ENGINEER
TREDO ENGINEERS
755 SENECA STREET, BUFFALO, NY 14210
(716)716.876.7147)

STATE OF NEW YORK BRIAN P. ZINTEL 089670 LICENSED PROFESSIONAL ENGINEER

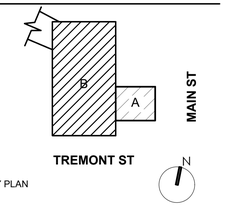

KEY PLAN

RIVIERA THEATRE AND ORGAN PRESERVATION SOCIETY

RIVIERA THEATRE GREEN ROOM

67 WEBSTER ST.
NORTH TONAWANDA, NY
14210

REV. #	DESCRIPTION	DATE

JOB NO.	2545
SCALE	NTS
ISSUE DATE	10/21/2026
DRAWN BY	JRG
CHECKED BY	-

THIS IS A SINGLE SHEET OF A COHESIVE SET OF CONSTRUCTION DOCUMENTS (INCLUDING DRAWINGS AND SPECIFICATIONS). INTERPRETATION OF THE INFORMATION AS PRESENTED SHOULD BE BASED ON THE ENTIRE SET OF DOCUMENTS.

DRAWING TITLE

ELECTRICAL SINGLE LINE DIAGRAM

E-300

100% CONSTRUCTION DOCUMENTS

BASIC ELECTRICAL REQUIREMENTS

A. THE INSTRUCTIONS TO BIDDERS, FORM OF BID, FORM OF CONTRACT, GENERAL CONDITIONS, SUPPLEMENTARY GENERAL CONDITIONS AND THE CONTRACT DRAWINGS ARE A PART OF THE SPECIFICATIONS FOR THIS DIVISION OF WORK AND THIS CONTRACTOR SHALL REFER TO THEM FOR INSTRUCTIONS PERTAINING TO HIS WORK.

B. "THE CONTRACTOR", "THIS CONTRACTOR", "EC", AND "DIVISION 26", AS USED IN THESE DRAWINGS AND SPECIFICATIONS, MEANS THE ELECTRICAL CONTRACTOR. "FURNISH AND INSTALL", "SUPPLY", AND "INSTALL", AS USED IN THESE SPECIFICATIONS, MEANS A COMPLETE AND WORKABLE INSTALLATION BY THE E.C.

C. WHERE SPECIFICATIONS AND/OR DRAWINGS CONFLICT WITH ANY CODE REQUIREMENT, CODE REQUIREMENTS SHALL BE FOLLOWED.

D. CODES AND STANDARDS:

1. NYS UNIFORM FIRE PREVENTION AND BUILDING CODE
2. NFPA STANDARDS
3. ALL APPLICABLE FEDERAL, STATE, AND LOCAL CODES
4. NYS ENERGY CONSERVATION CONSTRUCTION CODE
5. NATIONAL ELECTRICAL CODE

E. THE ELECTRICAL SYSTEMS COVERED BY THIS CONTRACT INCLUDE, BUT ARE NOT LIMITED TO:

1. BRANCH CIRCUIT WIRING AND RACEWAYS
2. LIGHTING
3. WIRING DEVICES
4. DISCONNECTS
5. GROUNDING AND BONDING
6. OVERCURRENT DEVICES
7. PANELBOARDS
8. CONNECTIONS TO HVAC, PLUMBING, FIRE PROTECTION, AND ALL OTHER ELECTRICALLY SUPPLIED EQUIPMENT, CONTROLS, CONTROL PANELS, MOTOR STARTERS, MOTOR STARTING EQUIPMENT AND DISCONNECTS NOT FURNISHED UNDER HVAC, PLUMBING, FIRE PROTECTION, OR OTHER CONTRACTS

F. PAY FOR ALL PERMITS, INSPECTION FEES, LICENSES AND FOR TESTS WHICH MAY BE REQUIRED IN DETERMINING THE COMPLETENESS OF THE ELECTRICAL WORK.

G. ALL ELECTRICAL PRODUCTS USED ON THIS PROJECT SHALL BE LISTED BY UNDERWRITER'S LABORATORIES (UL).

H. ALL ELECTRICAL PRODUCTS USED ON THIS PROJECT SHALL CONFORM TO APPLICABLE STANDARD OF THE NATIONAL ELECTRICAL MANUFACTURER'S ASSOCIATION (NEMA).

I. ALL ELECTRICAL INSTALLATION AND PRODUCTS USED ON THIS PROJECT SHALL COMPLY WITH THE NATIONAL ELECTRICAL CODE (NEC).

J. THE PLANS SHOW THE APPROXIMATE LOCATION OF ALL PARTS OF THE WORK. THE ARCHITECT WILL GIVE EXACT LOCATIONS. WHERE STRUCTURAL CONDITIONS ENCOUNTERED NECESSITATE MINOR CHANGES, THESE SHALL BE MADE WITHOUT CHARGE, BUT MUST MEET WITH THE APPROVAL OF THE ARCHITECT. WHERE MAJOR CHANGES ARE REQUIRED, THEY SHALL BE BROUGHT TO THE ATTENTION OF THE ARCHITECT FOR DECISION BEFORE PROCEEDING WITH THE WORK.

K. NOTIFY THE ARCHITECT, AND OBTAIN APPROVAL, BEFORE ANY COMPONENTS OF THE ELECTRICAL SYSTEM ARE CONCEALED BY CLOSING OFF AREAS, POURING CONCRETE, ETC.

L. DETERMINE AND BE RESPONSIBLE FOR PROPER SIZE AND LOCATION OF OPENINGS AND CHASES, AND GIVE GENERAL CONTRACTOR NOTICE OF REQUIREMENTS. INSTALL ALL SLEEVES NECESSARY FOR THE WORK. WHEREVER ANY RACEWAY PASSES THROUGH A WALL, THE OPENING SHALL BE SEALED TIGHT AGAINST THE RACEWAY BY THIS CONTRACTOR. RACEWAYS THROUGH FOUNDATION WALLS AND ROOFS SHALL BE SEALED WATERTIGHT BY THIS CONTRACTOR.

M. THIS CONTRACTOR SHALL DO ALL NECESSARY CUTTING AND PATCHING WHICH IS NOT CALLED TO BE DONE UNDER ANOTHER DIVISION. ALL CUTTING AND REPAIRING SHALL BE PERFORMED BY SKILLED WORKERS.

N. PAINT ALL EXPOSED RACEWAYS IN FINISHED ROOMS WITH TWO COATS OF PAINT TO MATCH SURROUNDINGS. INSTALL PANELBOARD TRIMS, CABINETS, ENCLOSURES, ETC., IN SUFFICIENT TIME SO THAT THE PAINTING CONTRACTOR MAY PAINT THESE SURFACES WITH THE WALLS. THIS CONTRACTOR SHALL PAY FOR ALL NECESSARY PAINTING IF THE ABOVE PROCEDURE IS NOT FOLLOWED.

O. THE CONTRACTOR SHALL FURNISH AND INSTALL THE POWER AND LIGHTING REQUIRED FOR THE CONSTRUCTION THE SCOPE SHALL INCLUDE, BUT NOT LIMITED TO:

1. TEMPORARY POWER DISTRIBUTION
2. LAMP SOCKETS AND LAMPS
3. OUTLETS AND CONSTRUCTION EQUIPMENT CONNECTION INCLUDING WELDERS
4. REMOVAL OF TEMPORARY DISTRIBUTION AFTER COMPLETION OF CONSTRUCTION

P. THE ELECTRICAL CONTRACTOR SHALL INSTALL RACEWAYS IN SUCH A MANNER THAT THE EXPANSION JOINTS OF THE BUILDING WILL FUNCTION PROPERLY AND NOT STRESS ANY ELECTRICAL RACEWAYS. EXPANSION JOINTS SHALL BE INSTALLED IN ALL RACEWAYS AT THE EXPANSION JOINTS OF THE BUILDING.

Q. BEFORE ORDERING ANY MATERIAL OR DOING ANY WORK THIS CONTRACTOR SHALL VERIFY ALL MEASUREMENTS AT THE BUILDING AND SHALL BE RESPONSIBLE FOR THE CORRECTNESS OF SAME. NO EXTRA CHARGE OR COMPENSATION WILL BE ALLOWED ON ACCOUNT OF DIFFERENCE BETWEEN ACTUAL DIMENSIONS AND THE MEASUREMENTS INDICATED ON THE DRAWINGS; ANY DIFFERENCE WHICH MAY BE FOUND SHALL BE SUBMITTED TO THE ARCHITECT FOR CONSIDERATION BEFORE PROCEEDING WITH THE WORK.

R. PROVIDE PRODUCT DATA, CATALOG CUT SHEETS WITH MFG. SPECIFICATIONS FOR REVIEW BY ARCH./ENGR. FOR THE FOLLOWING ITEMS:

1. SAFETY DISCONNECT SWITCHES
2. RACEWAY
3. OUTLET BOXES
4. FITTINGS
5. CONDUCTORS
6. DEVICES
7. PANELBOARDS
8. LIGHT FIXTURES AND CONTROLS

S. PROVIDE AN ELECTRONIC SUBMITTAL COPY FOR EACH ITEM LISTED ABOVE.

T. MAINTAIN THROUGHOUT PROJECT A SET OF PLANS WHICH ACCURATELY PORTRAY THE ACTUAL INSTALLATION, INCLUDING LOCATION OF ALL WIRING, EQUIPMENT, CIRCUIT NUMBERS, ETC. TURN OVER TO OWNER AT COMPLETION OF JOB.

U. CONTRACTOR SHALL PROVIDE COORDINATION DRAWINGS FOR FEEDER CONDUIT ROUTING OVER 60A RATING: CONDUIT ROUTING PLANS, DRAWN TO SCALE, ON WHIC THE FOLLOWING ITEMS ARE SHOWN AND COORDINATED WITH EACH OTHER, USING INPUT FROM INSTALLERS OF ITEMS INVOLVED:

1. STRUCTURAL MEMBERS IN PATHS OF CONDUIT GROUPS WITH COMMON SUPPORTS.
2. HVAC, PLUMBING AND FIRE PROTECTION ITEMS AND ARCHITECTURAL FEATURES IN PATHS OF CONDUIT GROUPS WITH COMMON SUPPORTS.

V. CONTRACTOR SHALL PROVIDE OPERATION AND MAINTENANCE DATA PREPARED BOTH ELECTRONICALLY AND (1) HARD COPY BINDER(S) SUBMITTED WITH THE FOLLOWING DATA:

1. PROVIDE EMERGENCY OPERATION, NORMAL OPERATION, AND PREVENTATIVE MAINTENANCE MANUALS FOR EACH SYSTEM, EQUIPMENT, AND DEVICES LISTED BELOW.
   a. PANELBOARDS
   b. DISCONNECT SWITCHES
   c. OVERCURRENT DEVICES (FUSES AND CIRCUIT BREAKERS)
   d. LIGHTING
   e. LIGHTING CONTROLS
   f. FIRE ALARM SYSTEM
2. INCLUDE THE FOLLOWING INFORMATION:
   a. MANUFACTURER'S OPERATING SPECIFICATIONS
   b. USER'S GUIDES FOR SOFTWARE AND HARDWARE
   c. DETAILED INSTRUCTIONS COVERING OPERATION UNDER BOTH NORMAL AND ABNORMAL CONDITIONS.
   d. MANUFACTURER'S INSTRUCTIONS FOR SETTING FIELD-ADJUSTABLE COMPONENTS.
   e. INCLUDE COPIES OF DEMONSTRATION AND TRAINING VIDEOS.

W. TRAINING: WITH ASSISTANCE FROM FACTORY-AUTHORIZED SERVICE REPRESTATIVE, TRAIN OWNER'S MAINTENANCE PERSONNEL ON THE FOLLOWING SYSTEM:

1. HOW TO ADJUST, OPERATE, AND MAINTAIN LIGHTING CONTROL DEVICES AND STANDALONE LIGHTING CONTROL DEVICES.
2. HOW TO ADJUST, OPERATE, AND MAINTAIN EMERGENCY BATTERY LIGHTING UNITS.
3. HOW TO ADJUST, OPERATE, AND MAINTAIN FIRE ALARM SYSTEM

RACEWAYS AND FITTINGS

A. WHERE CALLED FOR ON THE DRAWINGS, FLOOR OUTLET BOXES AND POKE-THROUGH DEVICE SHALL BE AS MANUFACTURED BY HUBBELL, WALKER, OR LEW.

B. WIRING AND RACEWAYS SHALL BE CONCEALED IN ALL ROOMS AND SPACES UNLESS OTHERWISE NOTED.

C. FOR INDOOR USE IN FINISHED ROOMS INSIDE HOLLOW WALL OR CEILING CAVITIES: WIRE IN ELECTRICAL METALLIC TUBING (EMT), SET SCREW TYPE FITTINGS. TYPE "MC" CABLE MAY BE UTILIZED WHERE CONCEALED WITHIN WALLS OR CEILINGS BETWEEN OUTLETS/LIGHT FIXTURES WHERE PERMITTED BY NEC.

D. FOR USE IN UNFINISHED AREAS: WIRE IN SURFACE MOUNTED RGS CONDUIT.

E. FOR OUTDOOR USE: WIRE IN THREADED, RIGID GALVANIZED STEEL (RGS) CONDUIT.

F. FOR UNDERGROUND USE: WIRE IN SCHEDULE 80 RIGID PVC NONMETALLIC CONDUIT.

G. FOR FINAL CONNECTION IN DAMP OR WET LOCATIONS: LIQUID TIGHT FLEXIBLE METAL CONDUIT, WITH LISTED FITTINGS.

H. IN ALL INSTANCES, INCLUDE A SEPARATE GROUNDING CONDUCTOR IN EACH RACEWAY, SIZE PER NEC.

I. FURNISH ALL FITTINGS REQUIRED, BUT NOT LIMITED TO: BUSHINGS TO PREVENT WIRE ABRASION; SINGLE-AND MULTIPLE-GANG BOXES TO ACCOMMODATE DEVICE INSTALLATION; ADAPTERS FROM CONDUIT TO RACEWAY; TRANSITIONS TO BOTH LARGER AND SMALLER SURFACE METAL RACEWAYS; 90 DEGREE ELBOWS, TEES, FIXTURE BOXES, AND FLEXIBLE SECTIONS.

J. SURFACE METAL RACEWAY AND FITTINGS SHALL MEET ALL REQUIREMENTS OF NEC ARTICLE 352A AND SHALL BE UL LISTED.

K. THIS CONTRACTOR SHALL BE RESPONSIBLE FOR THE PROPER APPLICATION, INSTALLATION, AND LOCATION OF ALL NECESSARY AND REQUIRED INSERTS, SUPPORTS, AND ANCHOR BOLTS, AND FOR A SATISFACTORY RACEWAY SYSTEM UPON COMPLETION OF THE PROJECT.

L. WHERE ANY COMPONENT OF THE RACEWAY SYSTEM IS DAMAGED PRIOR TO FINAL ACCEPTANCE BY THE OWNER, THIS CONTRACTOR SHALL BE REQUIRED TO REPLACE SAME OR PROVIDE A NEW RACEWAY SYSTEM, AT THE EXPENSE OF THE CONTRACTOR RESPONSIBLE FOR THE DAMAGE.

M. CONDUITS SHALL BE RUN TO AVOID ADVERSE CONDITIONS SUCH AS HEAT AND MOISTURE AND TO AVOID ALL MATERIALS AND EQUIPMENT OF OTHER TRADES. CONDUITS SHALL MAINTAIN A MINIMUM CLEARANCE OF SIX INCHES FROM ALL HOT WATER PIPES, FLUES, OR AND HIGH TEMPERATURE PIPING OR DUCTWORK. SHOULD IT BE FOUND NECESSARY TO INSTALL CONDUIT CLOSER THAN THIS TO HOT WATER PIPES AN INSULATING COVERING SHALL BE USED TO PROTECT THE CONDUIT FROM HIGH TEMPERATURE.

N. RACEWAYS SHALL NOT BE SMALLER THAN THE SIZE REQUIRED BY THE NATIONAL ELECTRICAL CODE FOR THE CONDUCTORS ENCLOSED AND SHALL BE LARGER WHERE SO SPECIFIED OR INDICATED ON THE PLANS.

O. ALL EXPOSED RUNS OF CONDUIT SHALL BE INSTALLED PARALLEL OR PERPENDICULAR TO WALLS OR CEILINGS. SUPPORTS SHALL BE FROM THE MASONRY OR STEEL STRUCTURE RATHER THAN FROM OTHER MECHANICAL WORK SUCH AS DUCTS, PIPING, ETC., IN ACCORDANCE WITH GOOD INDUSTRY PRACTICE IN A MANNER ACCEPTABLE TO THE ARCHITECT.

P. SUPPORTS AND ATTACHMENTS PROVIDED SHALL BE SPECIFICALLY DESIGNED FOR THE APPLICATIONS. PERFORATED HANGERS OR WIRE TIE SUPPORTS ARE NOT ACCEPTABLE. ALL HANGERS AND SUPPORTS SHALL HAVE CORROSION RESISTANT FINISH.

Q. ALL CONDUITS PASSING THROUGH WALLS, FLOORS, AND CEILINGS SHALL BE SLEEVED WITH A PIECE OF SCHEDULE 40 GALVANIZED STEEL PIPE WITH PLAIN ENDS. ALL SLEEVES SHALL BE SEALED WATERTIGHT USING A MATERIAL SIMILAR IN APPEARANCE TO THE SURROUNDING AREA OR APPROVED MATERIAL.

R. CONDUITS EXTENDING THROUGH ROOFS SHALL BE EQUIPPED WITH PITCH POCKETS.

S. ALL EMPTY RACEWAYS SHALL BE PROVIDED WITH A NYLON PULLWIRE.

T. ALL CONDUIT PASSING THROUGH A FIRE ZONE SHALL HAVE A FIRE RATED INSTALLATION.

U. CONDUIT SHALL BE INSTALLED SO THAT A CONTINUOUS GROUNDING SYSTEM WILL BE MAINTAINED FROM THE FURTHERMOST OUTLET TO THE ESTABLISHED WATER PIPE GROUND.

V. CONDULETS, UNILETS, OR SIMILAR APPROVED TYPE FITTINGS SHALL BE USED ON EXPOSED WORK WHERE CONDUIT CHANGES DIRECTION AND WHERE BENDS WILL NOT MAKE A NEAT JOB.

W. EXPOSED CONDUIT SHALL BE SECURELY FASTENED TO THE BUILDING AT EIGHT-FOOT MINIMUM INTERVALS, USING APPROVED HANGERS, STRAPS, CLAMPS, OR SCREWS. WOOD PLUGS SHALL NOT BE USED FOR FASTENING PURPOSES. CONDUIT RUN ABOVE HUNG CEILING OR IN CRAWL SPACES SHALL BE SUPPORTED IN THE SAME MANNER AS FOR EXPOSED RUNS. WIRE TIES ARE NOT ACCEPTABLE SUPPORTS.

X. CARE SHALL BE EXERCISED TO MAKE CERTAIN THAT THE CONDUIT SYSTEM NOW PLANNED WILL PERMIT REMOVAL OF CONDUCTORS FOR FUTURE CHANGES AS MAY BE REQUIRED. ALTHOUGH UP TO FOUR 90 DEGREE BENDS ARE PERMITTED BY THE NATIONAL ELECTRICAL CODE, THE PRACTICE OF USING MORE THAN THREE 90 DEGREE BENDS PER RUN SHALL BE AVOIDED. PULL BOXES SHALL BE USED IF AT ALL FEASIBLE.

Y. PULLBOXES SHALL BE INSTALLED AT 100 FOOT INTERVALS IN LONG STRAIGHT RUNS. CLOSE NIPPLES WILL NOT BE PERMITTED.

Z. CONDUIT SMALLER THAN 1/2" SHALL NOT BE USED.

AA. THE REQUIRED STRENGTH OF THE SUPPORTING EQUIPMENT AND THE SIZE AND TYPE OF ANCHORS SHALL BE BASED ON THE COMBINED WEIGHT OF CONDUIT, HANGERS, AND CONDUCTORS. THE USE OF PERFORATED IRON STRAPS FOR SUPPORTING CONDUITS WILL NOT BE PERMITTED.

BB. SINGLE RUNS:

1. WHERE CONDUITS ARE RUN INDIVIDUALLY, THEY SHALL BE SUPPORTED BY APPROVED PIPE STRAPS, SECURED BY MEANS OF TOGGLE BOLTS
2. IN HOLLOW MASONRY; EXPANSION SHIELDS AND MACHINE SCREWS OR STANDARD PRESET INSERTS IN CONCRETE OR SOLID MASONRY; MACHINE SCREWS OR BOLTS IN METAL SURFACES; AND WOOD SCREWS IN WOOD CONSTRUCTION. THE USE OF PERFORATED IRON STRAPS WILL NOT BE PERMITTED. CONDUITS INSTALLED EXPOSED ON THE SURFACE IN DAMP LOCATIONS OR IN REFRIGERATED AREAS SHALL BE PROVIDED WITH CLAMP BACKS UNDER EACH CONDUIT CLAMP TO PREVENT ACCUMULATION OF MOISTURE AROUND THE CONDUITS.
3. WHERE INDIVIDUAL CONDUITS ARE SUSPENDED FROM THE CEILING THEY SHALL BE SUPPORTED BY HANGERS EQUIVALENT TO STEEL CITY NO. C-149.

CC. MULTIPLE RUNS:

1. WHERE A NUMBER OF CONDUITS ARE TO BE RUN EXPOSED AND PARALLEL, ONE WITH ANOTHER, THEY SHALL BE GROUPED AND SUPPORTED BY TRAPEZE HANGERS.
2. HANGER RODS SHALL BE FASTENED TO STRUCTURAL STEEL MEMBERS WITH SUITABLE BEAM CLAMPS, OR TO CONCRETE INSERTS SET FLUSH WITH SURFACE.

DD. THE CONTRACTOR SHALL FURNISH AND INSTALL JUNCTION BOXES, PULLBOXES, AND CABLE SUPPORT BOXES AS SHOWN ON THE DRAWINGS, SPECIFIED HEREIN, OR AS OTHERWISE REQUIRED. BOXES SHALL BE SECURED IN POSITION INDEPENDENTLY OF CONDUITS ENTERING THEM BY MEANS OF BOLTS, ROD HANGERS, BRACKETS, OR OTHER APPROVED METHODS. OUTLET BOXES SHALL BE SECURELY FASTENED TO CEILINGS, WALLS OR COLUMNS.

EE. BOXES INSTALLED IN FINISHED CEILINGS, WALLS OR COLUMNS SHALL BE SET SO THAT THE FRONT EDGE OF THE BOX SHALL BE FLUSH WITH FINISHED CEILINGS, WALLS OR COLUMNS.

FF. UNLESS OTHERWISE NOTED ON THE DRAWINGS OR SPECIFIED HEREIN, RECEPTACLE OUTLET CENTERLINES SHALL BE INSTALLED 18" ABOVE THE FLOOR.

GG. PROVIDE FIRESTOPPING TO CABLE AND RACEWAY PENETRATIONS OR FIRE-RATED FLOOR AND WALL ASSEMBLIES TO ACHIEVE FIRE-RESISTANCE RATING OF THE ASSEMBLY.

WIRE AND CABLE

A. ACCEPTABLE MANUFACTURERS SHALL BE ANACONDA, GENERAL ELECTRIC, CERRO, OR BRAND REX.

B. ALL CONDUCTORS SHALL BY COPPER, WITH 600 VOLT INSULATION, UNLESS OTHERWISE NOTED; STRANDING AND INSULATION TYPES AS FOLLOWS:

C. BRANCH CIRCUIT FEEDERS

1. #10 AWG AND SMALLER (SOLID OR STRANDED) – TYPE THHN/THWN INSULATION.
2. #8 AWG AND LARGER (STRANDED) – TYPE THHN/THWN INSULATION.

D. ALL WIRE AND CABLE SHALL BE NEW, WITHIN ONE YEAR OF MANUFACTURE WHEN DELIVERED TO THE SITE AND BEAR THE UL LABEL, INSULATION TYPE, VOLTAGE, AND MANUFACTURER'S NAME AT REGULAR INTERVALS ON THE INSULATION.

E. ALL WIRING SHALL BE DONE SO THAT THE SYSTEM WILL BE CONTINUOUSLY POLARIZED THROUGHOUT, FOLLOWING THE COLOR CODING INDICATED IN THE NEC.

F. ALL CONNECTIONS USING COPPER SHALL BE MADE WITH CONNECTORS THAT ARE DESIGNED AND APPROVED FOR COPPER.

G. JOINTS, TAPS AND SPLICES OF WIRES OF SIZES #10 AWG AND SMALLER SHALL BE MADE BY MEANS OF "SCOTCHLOK" SPRING CONNECTORS.

H. JOINTS, TAPS AND SPICES OF WIRES OF SIZE #8 AWG AND LARGER SHALL BE MADE WITH THOMAS AND BETTS ALUMINUM/COPPER COLOR -KEYED COMPRESSION CONNECTORS, INSTALLED IN ACCORDANCE WITH MANUFACTURER'S RECOMMENDATIONS.

I. WIRE SIZES SHALL BE AS SHOWN ON THE DRAWINGS OR SIZED IN ACCORDANCE WITH THE NATIONAL ELECTRICAL CODE.

J. ALL FEEDER CABLES SHALL BE CONTINUOUS FROM ORIGIN TO EQUIPMENT TERMINATION WITHOUT RUNNING SPLICES IN INTERMEDIATE PULL OR SPLICE BOXES AS FAR AS PRACTICABLE. NO SPLICES ARE ALLOWED IN "C" CONDULETS.

K. CONDUCTORS SHALL NOT BE SMALLER THAN CODE SIZE FOR THE LOADS BEING HANDLED AND SHALL BE LARGER IF SO INDICATED IN THE PLANS OR SPECIFICATIONS. NO CONDUCTOR SHALL BE LESS THAN #12 AWG EXCEPT FOR CONTROL CIRCUITS, WHICH MAY BE #14 WIRE WHEN INDICATED.

L. PROVIDE SEPARATE GREEN GROUND (EQUIPMENT GROUND) CONDUCTOR IN ALL FEEDERS AND BRANCH CIRCUITS.

M. WIRING IN DUCTS, PLENUMS, AND OTHER AIR HANDLING SPACES SHALL BE PROVIDED PER NEC ART. 300.22 AND ALL OTHER APPLICABLE CODE SECTIONS. WHERE PROVIDED PLENUM CABLE SHALL BE LISTED AS BEING SUITABLE FOR USE IN DUCTS, PLENUMS, AND OTHER SPACES USED FOR ENVIRONMENTAL AIR AND SHALL ALSO BE LISTED AS HAVING ADEQUATE FIRE-RESISTANT AND LOW SMOKE-PRODUCING CHARACTERISTICS. WIRING SHALL INCLUDE BUT NOT LIMITED TO POWER, LIGHTING, TELEPHONE, DATA, FIRE ALARM, SECURITY, ETC.

CABINETS, BOXES, AND FITTINGS

A. USE SHEET STEEL JUNCTION, OUTLET AND PULL BOXES SIZED PER NEC IN ALL DRY LOCATIONS.

B. USE CAST BOXES FOR EXTERIOR USE, WHERE IN CONCRETE FLOORS, AND IN ALL DAMP OR WET LOCATIONS.

C. USE STEEL OR MALLEABLE IRON FITTINGS SPECIFICALLY DESIGNED FOR EACH RACEWAY TYPE, AS DICTATED BY GOOD PRACTICE.

D. IN ALL CASES, ALL CABINETS, JUNCTION AND OUTLET BOXES SHALL BE ACCESSIBLE.

ELECTRICAL CONNECTIONS FOR EQUIPMENT

A. FIXED EQUIPMENT REQUIRING ATTACHMENT PLUGS SHALL BE PROVIDED WITH APPROPRIATE RECEPTACLE TO MATCH PLUG.

B. FIXED EQUIPMENT REQUIRING DIRECT WIRED CONNECTIONS SHALL BE PROVIDED WITH LOCAL JUNCTION BOX, AND FLEXIBLE NONMETALLIC CONDUIT, OR LIQUID TIGHT FLEXIBLE NONMETALLIC CONDUIT CONNECTIONS TO EQUIPMENT.

C. PROVIDE SEPARATE FUSIBLE DISCONNECT FOR EQUIPMENT NOT FURNISHED WITH INTEGRAL OR FACTORY FURNISHED DISCONNECTING MEANS.

GROUNDING

A. GROUND EQUIPMENT, CIRCUITS PER NEC. USE COPPER CONDUCTORS.

SAFETY DISCONNECT DEVICES

A. DISCONNECTION DEVICES RATING SHALL BE AS SHOWN ON THE DRAWINGS, HEAVY-DUTY, "QUICK-MAKE, QUICK-BREAK", SAFETY SWITCHES WITH INTERLOCKING COVER, CONSTRUCTED OF CODE GAGE STEEL (UL 98). ENCLOSURES SHALL BE TREATED WITH RUST INHIBITING PHOSPHATE AND FINISHED IN GRAY BAKED ENAMEL.

B. DISCONNECTS SHALL BE FUSED OR NON-FUSED AS INDICATED ON THE DRAWINGS, OR AS REQUIRED BY NEC. NUMBER OF POLES, WITH OR WITHOUT SOLID NEUTRAL, SHALL BE AS INDICATED ON THE DRAWINGS, OR AS REQUIRED.

C. ENCLOSURES FOR INDOOR USE SHALL BE NEMA 1; ENCLOSURES FOR EXTERIOR USE SHALL BE NEMA 3R, ENCLOSURES FOR HOSE DOWN/DUST TIGHT LOCATIONS SHALL BE NEMA 4X.

D. DISCONNECTS SHALL REQUIRE THE USE OF A SCREWDRIVER FOR ACCESS TO INTERIOR WITHOUT OPENING CONTACTS.

E. DISCONNECTS SHALL HAVE PROVISIONS FOR PADLOCKING THE SWITCH IN THE "OFF", OR "OPEN" POSITION.

F. ACCEPTABLE MANUFACTURERS ARE SQUARE D, ITE, WESTINGHOUSE, OR GENERAL ELECTRIC.

G. FURNISH A SAFETY DISCONNECT DEVICE ON ALL EQUIPMENT CONNECTIONS WHERE INDICATED ON THE DRAWINGS, OR AS REQUIRED BY CODE.

H. DISCONNECTS SHALL BE MOUNTED TO PERMANENT STRUCTURAL ELEMENTS WITH APPROVED FASTENING MEANS. DISCONNECTS SHALL NOT BE FASTENED BY WELDING THE ENCLOSURE TO ITS DESIGNATED STRUCTURAL SUPPORT. BEAM CLAMPS, UNISTRUT AND BOLTED WASHERS COMPRISE ACCEPTABLE FASTENING MEANS.

I. NAMEPLATES SHALL BE PLASTIC LAMINATE WITH WHITE BACKGROUND AND 1/4" BLACK ENGRAVED LETTERS WITH THE TITLE OF THE EQUIPMENT THAT IS FED. NAMEPLATES SHALL BE ATTACHED USING RIVETS OR NUTS, WASHERS, AND BOLTS.

FUSES

A. CARTRIDGE FUSE APPLICATION:

1. MOTOR BRANCH CIRCUITS: CLASS RK1 TIME DELAY.
2. OTHER BRANCH CIRCUITS: CLASS RK5 NON-TIME DELAY.

B. MANUFACTURERS: BUSSMAN, LITTELFUSE, EAGLE ELECTRIC, GENERAL ELECTRIC, GOULD.

WIRING DEVICES

A. FOR FINISHED AREAS (DOES NOT INCLUDE PATIENT CARE AREAS), USE SPECIFICATION GRADE TAMPER RESISTANT DEVICES, COLOR AS SELECTED BY ARCHITECT, WITH SMOOTH THERMOPLASTIC WALL PLATE, COLOR TO MATCH DEVICE.

B. FOR PATIENT CARE AREAS (AREAS WHERE PATIENTS ARE EXAMINED OR TREATED), USE HOSPITAL GRADE TAMPER RESISTANT DEVICES, COLOR AS SELECTED BY ARCHITECT, WITH SMOOTH THERMOPLASTIC WALL PLATE, COLOR TO MATCH DEVICE.

C. FOR UNFINISHED DRY INTERIOR SPACES, USE SPECIFICATION GRADE DEVICE IN STEEL UTILITY BOXES WITH MATCHING STEEL DEVICE COVERS.

D. FOR INTERIOR AND EXTERIOR WET LOCATIONS, USE SPECIFICATION GRADE DEVICES INSTALLED WITH AN OUTLET ENCLOSURE CLEARLY MARKED "SUITABLE FOR WET LOCATIONS WHILE IN USE", AS MANUFACTURED BY TAYMAC CORP., WITH PUSH-BUTTON RELEASE.

E. RECEPTACLES:

20A, 125V TAMPER RESISTANT DUPLEX RECEPTACLE: HUBBELL #CR20TR
20A, 125V TAMPER RESISTANT DUPLEX GFI RECEPTACLE: HUBBELL #GFRST20

F. SWITCHES:

20A, 120/277V A.C. TOGGLE SWITCH: HUBBELL #CS1221
20A, 120/277V A.C. THREE-WAY SWITCH: HUBBELL #CS1223
20A, 120/277V A.C. FOUR-WAY SWITCH: HUBBELL #CS1224
20A, 120/277V A.C. KEY (LOCK) SWITCH: HUBBELL #1221L

G. MOUNTING: MOUNT DEVICES IN SINGLE OR GANGED ARRANGEMENT, AS CALLED FOR ON THE DRAWINGS. PROVIDE APPROPRIATE STEEL BACKBOX AS REQUIRED; USE SINGLE OR MULTIPLE DEVICE COVERS, AS REQUIRED. MULTIPLE DEVICES TO BE EQUALLY SPACED, AND ALIGNED STRAIGHT SO AS TO ALLOW DEVICE PLATE TO FIT SNUGLY AND PROPERLY.

H. WHERE MOUNTING ON MILLWORK OR OTHER EQUIPMENT, VERIFY PROPER ROUGH-IN DIMENSIONS WITH ARCHITECT.

I. DEVICES IN MECHANICAL EQUIPMENT ROOMS MAY BE WIRED USING SURFACE MOUNTED CONDUIT. DEVICES TO BE INSTALLED AT HEIGHTS TO COMPLY WITH APPLICABLE HANDICAPPED REQUIREMENTS: RECEPTACLES +18" UNLESS OTHERWISE NOTED; WALL SWITCHES +48"; FIRE ALARM PULLSTATIONS +48"; FIRE ALARM AUDIO VISUAL DEVICES +6'-8" BEING CENTERLINE OF STROBE UNLESS OTHERWISE NOTED. DIMENSIONS ABOVE FROM FINISHED FLOOR TO CENTERLINE. REFER TO TYPICAL MOUNTING HEIGHT DETAIL ON DRAWINGS FOR FURTHER REQUIREMENTS.

J. MANUFACTURERS: HUBBELL, PASS & SEYMOUR, LEVITON.

PANELBOARDS

A. SHALL BE UL LISTED AS "SUITABLE FOR USE AS SERVICE ENTRANCE EQUIPMENT", WHERE APPLICABLE.

B. PHASE, NEUTRAL AND GROUND BUSSES SHALL BE COPPER, AND PHASE BUSSES SHALL EXTEND THE ENTIRE HEIGHT OF PANELBOARD, FOR FUTURE INSTALLATION OF ADDITIONAL CIRCUIT BREAKERS, WITHOUT THE NEED FOR CONNECTORS, BUT CIRCUIT BREAKERS CONNECTIONS TO THE BUS SHALL BE: BOLT-ON, DOUBLE ROW ARRANGEMENT, DISTRIBUTED PHASE BUS TYPE.

C. CIRCUIT BREAKERS SHALL BE MOLDED CASE, THERMAL MAGNETIC, BOLT-ON TYPE, DEAD FRONT DESIGN, WITH QUICK-MAKE, QUICK-BREAK, COMMON TRIP TYPE SINGLE TOGGLE OPERATING MECHANISMS, 1, 2, OR 3 POLE, AND HACR LISTED WHEN USED FOR HVAC EQUIPMENT, SIZED PER PANELBOARD SCHEDULE.

D. BACKBOXES SHALL BE FABRICATED FROM GALVANIZED, CODE GAUGE, SHEET STEEL, MEETING OR EXCEEDING NECESSARY REQUIREMENT FOR WIRE BENDING SPACE, WITHOUT KNOCKOUTS.

E. COVERS SHALL BE DEAD FRONT DESIGN, WITH HINGED DOOR, CONCEALED FASTENERS, FABRICATED FROM CODE GAGE STEEL WITH POINTED ENAMEL FINISH, FLUSH LOCK AND CATCH.

F. PANELBOARD DIRECTORY CARD, WITH CLEAR PLASTIC COVER, SHALL BE PROVIDED ON BACK OR DOOR. CONTRACTOR SHALL COMPLETE DIRECTORY CARD, WITH CIRCUIT BREAKER NUMBERS CROSS REFERENCED TO THEIR RESPECTIVE LOAD(S), BY LOAD TYPE AND ROOM OR SPACE NAME AND NUMBER.

G. PROVIDE PERMANENT LAMACOID OR EQUAL TYPE LABEL INSIDE PANELBOARD DOOR, IDENTIFYING PANELBOARD NAME.

H. DESIGN EQUIPMENT SHALL BE SQUARE D CO. – TYPE NQOD FOR 208Y/120V PANELBOARDS; TYPE NF FOR 480Y/277V PANELBOARDS; TYPE I-LINE FOR DISTRIBUTION PANELBOARDS. ALTERNATE MANUFACTURERS ARE: CUTTLER-HAMMER/WESTINGHOUSE, OR SIEMENS/ITE.

ELECTRICAL SPECIFICATIONS CONTINUES ON NEXT PAGE

CJS ARCHITECTS
BUFFALO | ROCHESTER
www.cjsarchitects.com

ARCHITECT
CJS ARCHITECTS
755 SENECA STREET, BUFFALO, NY 14210
(716)716.856.6448)

STRUCTURAL ENGINEER
TREDO ENGINEERS
755 SENECA STREET, BUFFALO, NY 14210
(716)716.876.7147)

MEP.FP ENGINEER
BUFFALO ENGINEERING, P.C.
4245UNION ROAD, SUITE 204 BUFFALO, NY 14425
(716.633.5300)

CIVIL ENGINEER
TREDO ENGINEERS
755 SENECA STREET, BUFFALO, NY 14210
(716)716.876.7147)

STATE OF NEW YORK
BRIAN P. ZINTER
089670
LICENSED PROFESSIONAL ENGINEER

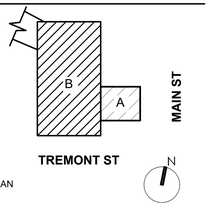

KEY PLAN

RIVIERA THEATRE AND ORGAN PRESERVATION SOCIETY

RIVIERA THEATRE GREEN ROOM

67 WEBSTER ST.
NORTH TONAWANDA, NY
14210

REV. #	DESCRIPTION	DATE

JOB NO.	2545
SCALE	NTS
ISSUE DATE	10/21/2026
DRAWN BY	JRG
CHECKED BY	-

THIS IS A SINGLE SHEET OF A COHESIVE SET OF CONSTRUCTION DOCUMENTS (INCLUDING DRAWINGS AND SPECIFICATIONS). INTERPRETATION OF THE INFORMATION AS PRESENTED SHOULD BE BASED ON THE ENTIRE SET OF DOCUMENTS.

DRAWING TITLE

ELECTRICAL SPECIFICATIONS 1 OF 2

E-400

100% CONSTRUCTION DOCUMENTS

INTERIOR LIGHTING

A. PROVIDE AND INSTALL ITEMS AS SPECIFIED HEREIN AND LISTED ON THE LIGHTING FIXTURE SCHEDULE ON THE DRAWINGS.

B. CATALOG NAMES AND NUMBERS USED IN THE LIGHTING FIXTURE SCHEDULE ARE TO ESTABLISH A STANDARD OF QUALITY AND SHALL NOT BE CONSTRUED AS LIMITING COMPETITION.

C. IF ALTERNATED, OR OPTIONAL, METHODS ARE PROPOSED AS SUBSTITUTION FOR ANY ONE OF THE LIGHTING FIXTURES, THEY MUST BE EQUAL IN DESIGN AND QUALITY, AS DETERMINED BY THE ARCHITECT/ENGINEER. THE DATA SUBMITTED MUST INCLUDE A DESCRIPTION OF THE LIGHTING FIXTURE, LENS, BALLAST, SHEET METAL GAGE, PHOTOMETRIC DATA, ETC.

D. UPON REQUEST OF THE ENGINEER, A SAMPLE OF THE PROPOSED SUBSTITUTION SHALL BE PROVIDED.

E. FURNISH AND INSTALL ALL LIGHTING FIXTURES COMPLETE WITH LAMPS. PROVIDE 10% ADDITIONAL LAMPS FOR EACH TYPE OF LAMP REQUIRED ON PROJECT AND TURN OVER TO OWNER.

F. ALL LIGHTING FIXTURES SHALL CARRY THE UNDERWRITER'S LABEL OF APPROVAL.

G. FIXTURES SHALL BE FREE OF IMPERFECTIONS, HANDLING, OR INSTALLATION DAMAGE.

H. OBTAIN EXACT LOCATION OF ALL CEILING OUTLETS FROM THE ARCHITECT.

I. THE ELECTRICAL CONTRACTOR SHALL BE RESPONSIBLE FOR THE FIT OF ALL LIGHTING FIXTURES INTO THE ACTUAL CEILING INSTALLED.

J. ALL WIRING WITHIN EACH LIGHTING FIXTURE SHALL BE CONTAINED IN METALLIC WIRING CHANNEL AND NOT IN THE LAMP CHAMBER.

K. FLUORESCENT LIGHTING FIXTURES SHALL BE "P" RATED, PREMIUM GRADE, AND SO LABELED AS PER NEC.

L. CONFIRM COMPATIBILITY AND INTERFACE OF OTHER MATERIALS WITH LUMINAIRE AND CEILING SYSTEM. REPORT DISCREPANCIES TO THE ENGINEER/ARCHITECT AND DEFER ORDERING UNTIL CLARIFIED.

M. WARRANTY FOR LED FIXTURES: MANUFACTURER'S STANDARD FORM, IN WHICH LED FIXTURE MANUFACTURER AGREES TO REPAIR OR REPLACE LED FIXTURE THAT FAIL IN MATERIALS OR WORKMANSHIP WITHIN SPECIFIED PERIOD.
   1. WARRANTY PERIOD FOR LED FIXTURES: FIVE (5) YEARS FROM DATE OF SUBSTANTIAL COMPLETION.

N. COORDINATE WITH DIVISION 15 TO AVOID CONFLICTS BETWEEN LUMINARIES, SUPPORTS, FITTINGS, AND MECHANICAL EQUIPMENT.

O. LED FIXTURES: COMPLY WITH IESNA LM-79 AND LM-80.

P. LED LIGHTING FIXTURES AND COMPONENTS
   a. LED: COLOR TEMPERATURE 3500K, CRI 80 (MINIMUM) TESTED IN ACCORDANCE WITH LM-80, TM21. PROJECTED LIFE OF OVER 75,000 HOURS AT 50°C.
   b. DRIVERS: CONTANT CURRENT DRIVER AT 350mA, 100-277V.
   c. LED LIGHTING FIXTURES: PROVIDE "LIGHTING FACTS" INFORMATION SHEETS.

Q. IT WILL BE THE RESPONSIBILITY OF THE ELECTRICAL CONTRACTOR TO VERIFY, WITH THE CONSTRUCTION CONTRACTOR, THE TYPES OF CEILINGS IN ALL ROOMS HAVING TROFFERS, AS TO THE TYPE OF TROFFER CONSTRUCTION REQUIRED TO MATCH THE CEILING CONSTRUCTION

R. MOUNT HIGH INTENSITY DISCHARGE BALLASTS ON RUBBER GROMMETS TO REDUCE NOISE TRANSMISSION.

S. ALL METAL PARTS SHALL BE GROUNDED AS A COMMON UNIT.

T. SUPPORT FLUORESCENT LUMINARIES DIRECTLY FROM BUILDING STRUCTURE BY ROD HANGERS AND INSERTS, OR METAL ANGLE HEADERS SUPPORTED FROM FRAMING STRUCTURE OF CEILING SUSPENSION SYSTEM.

U. INSTALL RECESSED LUMINARIES TO PERMIT REMOVAL FROM BELOW, TO GAIN ACCESS TO OUTLET OR PRE-WIRED LIGHTING FIXTURE BOX.

EXISTING CONSTRUCTION AND COORDINATION

A. DISCONNECT AND REMOVE ANY AND ALL EXISTING ELECTRIC WORK NOT NECESSARY FOR EXISTING OR NEW INSTALLATION, BUT INTERFERING WITH NEW CONSTRUCTION.

B. DISCONNECT, REMOVE, RELOCATE AND RECONNECT ANY AND ALL EXISTING ELECTRIC WORK REQUIRED TO REMAIN, BUT INTERFERING WITH NEW CONSTRUCTION.

C. MAINTAIN INTEGRITY AND OPERATION OF ALL SYSTEM WIRING AT ALL TIMES. PROVIDE TEMPORARY CONNECTIONS AS REQUIRED TO KEEP SYSTEMS OPERATIONAL.

D. EXISTING SYSTEMS WIRING EXTENSIONS, FROM EXISTING ELECTRIC WORK, SHALL BE EXTENDED WITH SIMILAR RACEWAY MATERIAL. (EXAMPLE: IF EXISTING LIGHTING FIXTURE OUTLET BOX IS PRESENTLY INSTALLED WITH RGS, EXTENSION OF CIRCUIT WIRING SHALL ALSO BE RGS.)

E. EXISTING EQUIPMENT CONNECTIONS AND WIRING DEVICES, SCHEDULED FOR RELOCATION, SHALL BE EXTENDED TO NEW LOCATION UTILIZING THE SAME WIRING METHOD PREVIOUSLY USED. (EXAMPLE: IF EXISTING WIRING DEVICE OUTLET WAS PREVIOUSLY INSTALLED WITH GALVANIZED RIGID STEEL CONDUIT, NEW RELOCATED OUTLET SHALL BE EXTENDED WITH NEW GALVANIZED RIGID STEEL CONDUIT.)

F. WHERE DEMOLITION NOTES SCHEDULE EXISTING WIRING DEVICES, LIGHTING FIXTURES, SYSTEMS DEVICES, EQUIPMENT CONNECTIONS, ETC., TO BE " DISCONNECTED AND REMOVED IN THEIR ENTIRETY", THE CONTRACTOR SHALL DISCONNECT AND REMOVE THE EXISTING WIRING DEVICES, COVER PLATES, BRANCH CIRCUIT WIRING, CONDUIT OR RACEWAY. OUTLET AND/OR SPLICE BOXES, ETC., BACK TO EITHER THE LAST DEVICE SCHEDULED TO REMAIN, OR ALL THE WAY BACK TO THE EXISTING PANELBOARD OR CIRCUIT ORIGINATION POINT. CUT AND PATCH EXISTING WALLS AND/OR CEILINGS, IF REQUIRED, FOR COMPLETE REMOVAL OF EXISTING OUTLET BOXES AND CONDUITS.

G. REVIEW WITH OWNER, THOSE EXISTING ITEMS TO BE TURNED OVER TO THE OWNER AFTER REMOVAL. OTHERWISE, DISPOSE OF ALL REMOVED ITEMS, OFF SITE.

H. ALL ELECTRICAL WORK SHALL BE INSTALLED CONCEALED. CUT & PATCH EXISTING HALLS, CEILINGS & FLOORS, AS REQUIRED, TO ACCOMPLISH SAME.

I. NEATLY CUT EXISTING CONSTRUCTION AS REQUIRED FOR INSTALLATION OF WORK INCLUDED UNDER THIS CONTRACT.

J. CUT IN MANNER TO AVOID DAMAGE TO ADJACENT WORK.

K. PATCH ALL EXISTING WORK DISTURBED BY INSTALLATION OF NEW WORK OR REMOVAL OF EXISTING WORK, INCLUDING, BUT NOT LIMITED TO, INSULATION, WALLS AND WALL COVERING, PAINT, CEILING MATERIALS AND/OR TILES, FLOOR COVERING, ETC., TO MATCH ADJACENT FINISH IN APPROVED MANNER.

L. ASSUME RESPONSIBILITY FOR ALL WORK, OR EQUIPMENT DAMAGED DURING COURSE OF CUTTING PROCESS.

M. PATCH ALL CUT HOLES OR HOLES LEFT BY REMOVAL OF EQUIPMENT OR FIXTURES IN APPROVED MANNER.

FIRE ALARM SYSTEM

A. FURNISH AND INSTALL FIVE (5) ZONE FIRE ALARM CONTROL PANEL (NOTIFIER #SFP-5UD SERIES OR EQUAL) WITH AUTOMATIC OPERATION, SELF-CHECKING DIAGNOSTICS, INTEGRAL BATTERY CHARGERS, ALARM RESOUND CAPABILITY, BROWN OUR PROTECTION, 24 HOUR EMERGENCY SEALED MAINTENANCE FREE STANDBY BATTERIES, AUXILIARY CONTACTS (HVAC SHUTDOWN), CITY CONNECTION TIE-IN THRU AUTOMATIC DIALING SYSTEM AND CLASS B INITIATING CIRCUITS. PANEL FRONT LED'S SHALL INDICATE POWER ON, BATTERY, SYSTEM TROUBLE AND INDIVIDUAL ZONE ALARM AND TROUBLE STATUS. A DRILL SWITCH SHALL BE PROVIDED. FURNISH AND INSTALL PERIPHERAL DEVICES SUCH AS NON-CODED, SINGLE ACTION MANUAL PULL STATIONS, SMOKE DETECTORS, CARBON MONOXIDE DETECTORS, AND SMOKE DUCT DETECTORS WITH SAMPLING TUBES AND REMOTE TEST STATION. LOCATIONS SHOWN ON DRAWING, CONDUIT AND WIRING SHALL BE IN STRICT CONFORMANCE WITH THE LOCAL MUNICIPALITY REQUIREMENTS, NATIONAL ELECTRICAL CODE, NEW YORK STATE B.O.C.A., NATIONAL BOARD OF UNDERWRITER'S , NEW YORK STATE FIRE PREVENTION AND BUILDING CODE, LIFE SAFETY CODE, NFPA 101, NFPA 72A,B,C,E AND ALL OTHER APPLICABLE CODES, RULES, LAWS AND ORDINANCES.

B. WIRING
   1. INSTALL ALL SYSTEM WIRING IN METAL RACEWAY IN ACCORDANCE WITH THE NATIONAL ELECTRICAL CODE (GRS OR EMT).
   2. COLOR CODING: USE ONE COLOR FOR ALARM CIRCUIT WIRING AND A DIFFERENT COLOR FOR SUPERVISORY CIRCUITS PER MFGR'S WIRING INSTRUCTIONS.
   3. PROVIDE ALL CONDUIT, BOXES, OUTLETS, ETC. TO PROVIDE FOR COMPLETE INSTALLATION OF FIRE ALARM SYSTEM. REFER TO FLOOR PLANS FOR QUANTITIES AND LOCATIONS OF ALL DEVICES.
   4. PROVIDE SHUTDOWN OF FANS AND OTHER AIR-HANDLING EQUIPMENT SERVING ZONES WHEN ALARM IS INITIATED. PROVIDE WIRING FOR INTERLOCK. CONNECT CIRCUIT AHEAD OF ALL OTHER CONTROLS. PROVIDE INTERFACE RELAY(S) WITH 24V DC COIL AND POWER.
   5. PROVIDE RELEASE OF FIRE DOORS AND FIRE SHUTTERS WHEN ALARM IS INITIATED. PROVIDE WIRING FOR INTERLOCK. CONNECT CIRCUIT AHEAD OF ALL OTHER CONTROLS. PROVIDE INTERFACE AND CONTROL RELAY(S) WITH 24V DC COIL AND POWER.

C. INSTALLATION
   1. ENGAGE A LICSENSED, FACTORY AUTHORIZED SERVICE REPRESENTATIVE TO INSPECT, FIELD ASSEMBLE COMPONENTS AND CONNECTIONS; SUPERVISE PRETESTING, TESTING AND FINAL ADJUSTMENT OF THE SYSTEM. PREPARE FORMS FOR SYSTEMATIC RECORDING OF ACCEPTANCE TEST RESULTS.
   2. PROVIDE EIGHT (8) HOURS OF TRAINING TO OWNERS MAINTENANCE PERSONNEL.

CONNECTION TO MECHANICAL EQUIPMENT

A. THE ELECTRICAL CONTRACTOR SHALL PROVIDE DISCONNECT SWITCHES (SIZED AS REQUIRED) OR THERMAL SWITCHES WITH PILOT LIGHTS, ON ALL MECHANICAL EQUIPMENT AS REQUIRED BY NATIONAL ELECTRICAL CODE, WHEN EQUIPMENT IS NOT SUPPLIED WITH SAME.

B. THE ELECTRICAL CONTRACTOR SHALL PROVIDE SINGLE- OR THREE-PHASE AC POWER, AS REQUIRED, TO ALL MECHANICAL EQUIPMENT PROVIDED AND INSTALLED BY DIVISION 15.

C. ALL CONTROL DEVICES (THERMOSTATS, ETC.) REQUIRED FOR MECHANICAL EQUIPMENT OPERATION SHALL BE PROVIDED, INSTALLED, AND WIRED BY THE RESPECTIVE MECHANICAL CONTRACTOR.

END OF ELECTRICAL SPECIFICATIONS

CJS ARCHITECTS
BUFFALO | ROCHESTER
www.cjsarchitects.com

ARCHITECT
CJS ARCHITECTS
755 SENECA STREET, BUFFALO, NY 14210
(716)716.856.6448)

STRUCTURAL ENGINEER
TREDO ENGINEERS
755 SENECA STREET, BUFFALO, NY 14210
(716)716.876.7147)

MEP.FP ENGINEER
BUFFALO ENGINEERING, P.C.
4245UNION ROAD, SUITE 204 BUFFALO, NY 14425
(716.633.5300)

CIVIL ENGINEER
TREDO ENGINEERS
755 SENECA STREET, BUFFALO, NY 14210
(716)716.876.7147)

STATE OF NEW YORK
BRIAN P. ZINTEL
089670
LICENSED PROFESSIONAL ENGINEER

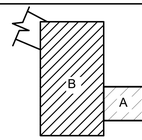

KEY PLAN

RIVIERA THEATRE AND ORGAN PRESERVATION SOCIETY

RIVIERA THEATRE GREEN ROOM

67 WEBSTER ST.
NORTH TONAWANDA, NY
14210

REV. #	DESCRIPTION	DATE

JOB NO.	2545
SCALE	NTS
ISSUE DATE	10/21/2026
DRAWN BY	JRG
CHECKED BY	-

THIS IS A SINGLE SHEET OF A COHESIVE SET OF CONSTRUCTION DOCUMENTS (INCLUDING DRAWINGS AND SPECIFICATIONS). INTERPRETATION OF THE INFORMATION AS PRESENTED SHOULD BE BASED ON THE ENTIRE SET OF DOCUMENTS.

DRAWING TITLE

ELECTRICAL SPECIFICATIONS 2 OF 2

E-401

100% CONSTRUCTION DOCUMENTS