ADDITION & RENOVATION

COLD SPRING CONSTRUCTION CO.

43 JACKSON ST.
AKRON, NY14001
03/04/22
PERMIT SET
PROJECT #2103

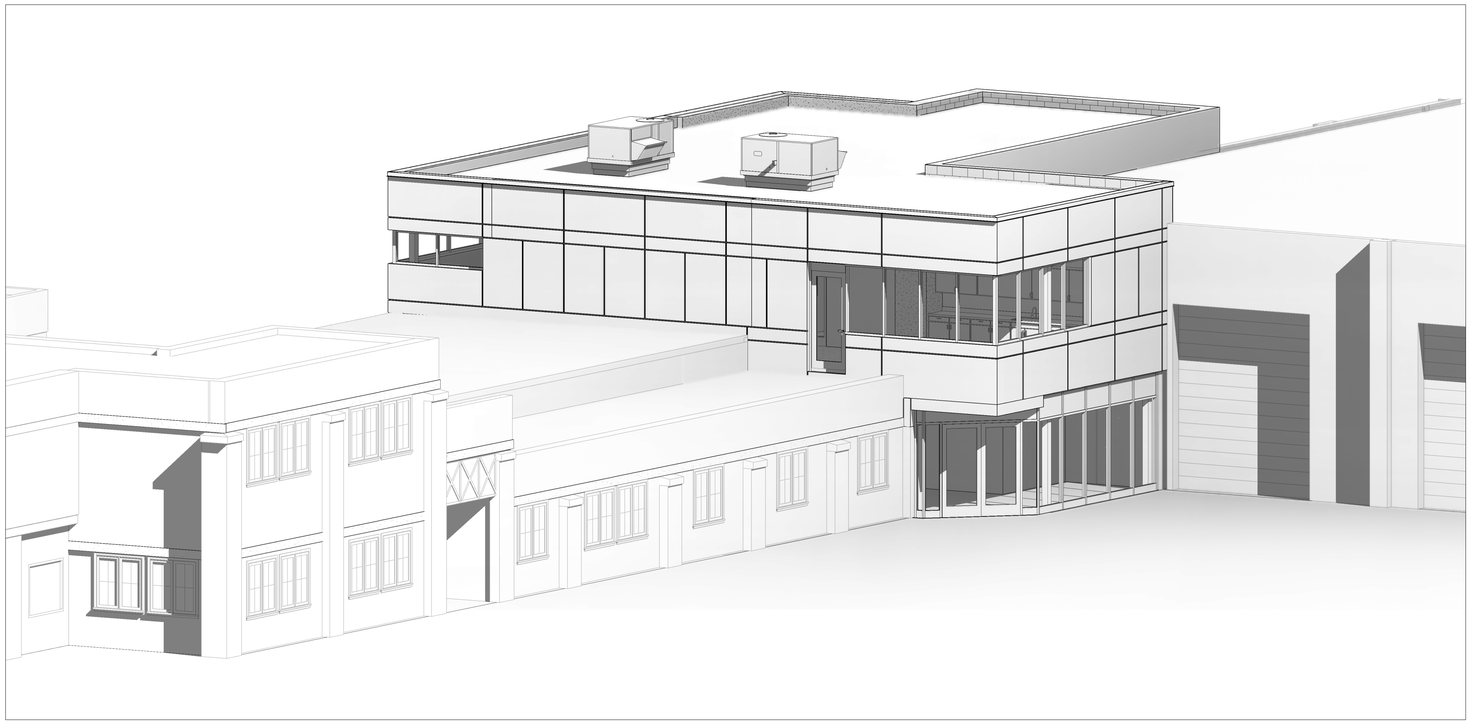

SHEET NUMBER	SHEET NAME
GENERAL	
A-001	SYMBOLS, ABBREVIATIONS & GEN. NOTES
EXISTING	
EX101	EXISTING FIRST & SECOND FLOOR PLAN
EX102	EXISTING ROOF PLAN
EX200	EXISTING ELEVATION
CODE REVIEW	
LS-01	FIRST FLOOR LIFE SAFETY
LS-02	SECOND FLOOR LIFE SAFETY
CIVIL	
SP101	EXISTING CONDITIONS & SITE DEMOLITION PLAN
SP102	SITE LAYOUT & DRAINAGE PLAN
SP102.	SITE LAYOUT & DRAINAGE PLAN
STRUCTURAL	
S-101	FOUNDATION / FIRST FLOOR PLAN
S-102	SECOND FLOOR FRAMING
S-103	ROOF FRAMING
S-104	PARTIAL DEMOLITION FRAMING PLAN
S-201a	GENERAL NOTES
S-201b	GENERAL NOTES
S-202	TYPICAL DETAILS
S-203	TYPICAL DETAILS
S-204	TYPICAL DETAILS
S-301	SECTIONS AND DETAILS
S-302	SECTIONS AND DETAILS
S-303	SECTIONS AND DETAILS
S-304	SECTIONS AND DETAILS
S-305	SECTIONS AND DETAILS
S-306	SECTIONS AND DETAILS
S-307	SECTIONS AND DETAILS
ARCHITECTURAL	
A-101	FIRST FLOOR PLAN
A-102	SECOND FLOOR PLAN
A-103	ROOF PLAN
A-200	EXTERIOR ELEVATIONS
A-250	BUILDING SECTIONS
A-300	VERTICAL CIRCULATION
A-301	VERTICAL CIRCULATION LIFT
A-400	REFLECTED CEILING PLAN
A-450	TYPICAL CEILING DETAILS
A-500	EXTERIOR WALL SECTIONS & DETAILS
A-501	EXTERIOR WALL SECTIONS & DETAILS
A-502	EXTERIOR WALL SECTIONS & DETAILS
A-600	FINISH PLAN
A-610	INTERIOR ELEVATIONS
A-650	TOILET ROOM
A-700	ENLARGED PLANS & DETAILS
A-701	ENLARGED PLANS & DETAILS
A-710	MILLWORK DETAILS
A-750	SECTION DETAILS
A-751	SECTION DETAILS
A-800	PARTITION SCHEDULE
A-801	DOOR TYPES, SCHEDULE & DETAILS
A-802	STOREFRONT TYPES AND DETAILS

OWNER

COLD SPRING CONSTRUCTION CO.

43 JACKSON ST.
AKRON, NY 14001

716.542.2011 tel

www.coldspringconstruction.com

ARCHITECT

CJS ARCHITECTS

755 SENECA STREET
BUFFALO, NY 14210

716.856.6448 tel

www.cjsarchitects.com

CIVIL & STRUCTURAL ENGINEER

TREDO ENGINEERS

755 SENECA ST, #202
BUFFALO, NY 14210

716.876.7147 tel

www.tredoengineers.com

ABBREVIATIONS

ALL ABBREVIATIONS NOT NECESSARILY USED

A.F.F.	ABOVE FINISHED FLOOR	EXIST.	EXISTING	MAS.	MASONRY	RFG.	ROOFING
ABSORB.	ABSORBATIVE	EXP.	EXPANSION	MO	MASONRY OPENING	RM.	ROOM
A.D.	ACCESS DOOR	E.J.	EXPANSION JOINT	MATL.	MATERIAL	R.F.S.	ROOM FINISH SCHEDULE
ACOUST.	ACOUSTICAL	EXP.	EXPOSED	MAX.	MAXIMUM	R.O.	ROUGH OPENING
A.C.T.	ACOUSTICAL CEILING TILE	EXT.	EXTERIOR	MECH.	MECHANICAL	RND.	ROUND
A.P.	ACCESS PANEL	E.I.F.S.	EXTERIOR INSULATION AND FINISH SYSTEM	MEMB.	MEMBRANE	RUB.	RUBBER
A.W.P.	ACOUSTICAL WALL PANEL			MTL.	METAL	RT	RUBBER TILE
ADH.	ADHESIVE	F.W.C.	FABRIC WALL COVERING	MWU	MILLWORK UNIT	RBL.	RUBBLE STONE
ADJ.	ADJACENT	F.B.	FACE BRICK	MIN.	MINIMUM	R.O.B.	RUN OF BANK
ADJUST.	ADJUSTABLE	F.C.U.	FAN COIL UNIT	MISC.	MISCELLANEOUS		
AGGR.	AGGREGATE	F.N.D.	FEMININE NAPKIN DISPOSAL	MTD.	MOUNTED	SNC	SANITARY NAPKIN CABINET
A.C.	AIR CONDITIONING	F.R.P.	FIBERGLASS REINFORCED POLYESTER	MOV.	MOVABLE	SND	SANITARY NAPKIN DISPOSER
AL.	ALIGN	F.T.R.	FIN TUBE RADIATION	MULL.	MULLION	SCHED.	SCHEDULE
ALT.	ALTERATION	FIN.	FINISH (ED)			SNT.	SEALANT
ALTN.	ALTERNATE	F.F.	FINISH FLOOR	NAT.	NATURAL	STG.	SEATING
ALUM.	ALUMINUM	F.A.	FIRE ALARM	NRC	NOISE REDUCTION COEFFICIENT	SECT.	SECTION
APPD.	APPROVED	F.A.C.P.	FIRE ALARM CONTOL PANEL	N.I.C.	NOT IN CONTRACT	SB	SHAMPOO BOWL
APPROX.	APPROXIMATE	F.E.C.	FIRE EXTINGUISHER CABINET	N.T.S.	NOT TO SCALE	SHTG.	SHEATHING
ARCH.	ARCHITECTURAL	F.H.C.	FIRE HOSE CABINET	NOM.	NOMINAL	SHT.	SHEET
ASB.	ASBESTOS	F.P.	FIRE PROOFING	NO.	NUMBER	SV	SHEET VINYL
A.A.C.	ASBESTOS ABATEMENT CONTRACTOR	FL.	FLOOR			SH.	SHELF, SHELVING
ASPH.	ASPHALT	F.D.	FLOOR DRAIN	O.C.	ON CENTER	SHWR.	SHOWER
AUTO.	AUTOMATIC	FT.	FOOT	OPNG.	OPENING	SIM.	SIMILAR
AVG.	AVERAGE	FTG.	FOOTING	OPP.	OPPOSITE	S.D.	SOAP DISPENSER
		FDTN.	FOUNDATION	O.H.	OPPOSITE HAND	S.C.	SOLID CORE
BSMT.	BASEMENT	FUR.	FURRING	OD	OUTSIDE DIAMETER	SPKR.	SPEAKER
BRG.	BEARING			OH.	OVERHEAD	SPEC.	SPECIFICATION
BTWN.	BETWEEN	GAL.	GALLON			SQ.	SQUARE
BIT.	BITUMINOUS	GALV.	GALVANIZED	PNT.	PAINT (ED)	S.F.	SQUARE FOOT
BLK.	BLOCK	G.I.	GALVANIZED IRON	PR.	PAIR	S.S.	STAINLESS STEEL
BLKG.	BLOCKING	GA.	GAUGE, GAGE	PNL.	PANEL	S.P.	STAND PIPE
BD.	BOARD	G.C.	GENERAL CONTRACT (OR)	PTD	PAPER TOWEL DISPENSER	STD.	STANDARD
BTM.	BOTTOM	GL.	GLASS	PTR	PAPER TOWEL RECEPTOR	STL.	STEEL
BRK.	BRICK	G.B.	GRAB BAR	P.BD.	PARTICLE BOARD	ST.	STONE
B.C.	BRICK COURSE	G.F.I.	GROUND FAULT INTERRUPTER	PTN.	PARTITION	STOR.	STORAGE
BLDG.	BUILDING	GRN.	GRANITE	PVMT.	PAVEMENT	SD	STORM DRAIN
B.U.R.	BUILT-UP ROOFING	GYP.	GYPSUM	PERF.	PERFORATED	STR.	STRUCTURAL
B.O.	BY OWNER	G.W.B.	GYPSUM WALL BOARD	PLAS.	PLASTER	SGT	STRUCTURAL GLAZED TILE
				PLAS.LAM.	PLASTIC LAMINATE	SUSP.	SUSPENDED
CAB.	CABINET	HDNR.	HARDENER	PL.	PLATE	SW.	SWITCH
CPT.	CARPET	HDW.	HARDWARE	PL.GL.	PLATE GLASS	SW.BD.	SWITCH BOARD
C.I.	CAST IRON	HDWD.	HARDWOOD	PLBG.	PLUMBING	SYM.	SYMMETRICAL
C.I.P.	CAST IN PLACE	HTR.	HEATER	P.C.	PLUMBING CONTRACTOR		
CW.	CASEWORK	HTG.	HEATING	PLYWD.	PLYWOOD	TKBD.	TACKBOARD
C.B.	CATCH BASIN	H.C.	HEATING CONTRACTOR	PT.	POINT	TEL.	TELEPHONE
CLG.	CEILING	H.V.A.C.	HEATING, VENTILATING & AIR CONDITIONING	PPG	POLISHED PLATE GLASS	TEMP.	TEMPORARY
CEM.	CEMENT			PPTG	POLISHED PLATE	TER.	TERRAZZO
C.M.T.	CERAMIC MOSAIC TILE	HT.	HEIGHT		TEMPERED GLASS	TEXT.	TEXTURE
C.M.T.B.	CERAMIC MOSAIC TILE BASE	HPC	HIGH PERFORMANCE COATINGS	PPWG	POLISHED PLATE	THK.	THICK (NESS)
CER.	CERAMIC	HPL	HIGH PRESSURE PLASTIC		WIRE GLASS	THR.	THRESHOLD
C.T.	CERAMIC TILE		LAMINATE	POLY.	POLYETHYLENE	TBD	TO BE DETERMINED
C.T.B.	CERAMIC TILE BASE	H.C.	HOLLOW CORE	PRT	POLY RESIN TILE	TLT.	TOILET
CHBD.	CHALK BOARD	H.M.	HOLLOW METAL	P.V.C.	POLYVINYL CHLORIDE	TPH	TOILET PAPER HOLDER
C.O.	CLEAN OUT	HORIZ.	HORIZONTAL	PCF	POUNDS PER CUBIC FOOT	T&G	TONGUE & GROOVE
CLR.	CLEAR	H.B.	HOSE BIB	PSF	POUNDS PER SQUARE FOOT	T.O.G.	TOP OF GRATE
CLO.	CLOSET	H.CAB.	HOSE CABINET	PSI	POUNDS PER SQUARE INCH	T.O.S.	TOP OF STEEL
COL.	COLUMN	H.PL.	HOT PLATE	PT	PORCELAIN TILE	T.O.W.	TOP OF WALL
C.W.	COLD WATER	H.W.	HOT WATER	PCP	PRECAST CONCRETE PANEL	TB	TOWEL BAR
CONC.	CONCRETE	HR.	HOUR	PRE-FAB.	PREFABRICATED	TYP.	TYPICAL
C.M.U.	CONCRETE MASONRY UNIT	H.S.	HOSPITAL STOP	PREF.	PREFINISHED		
CONT.	CONTINUOUS			PMLD.	PREMOLDED	U/C	UNDER COUNTER
C.J.	CONTROL JOINT	IN.	INCH	PSC	PRE-STRESSED CONCRETE	UCL	UNDER COUNTER LIGHT
C.G.	CORNER GUARD	I.M.	INSULATED METAL	PROJ.	PROJECTION	UL	UNDERWRITERS LABORATORIES
CORR.	CORRIDOR	INSUL.	INSULATION OR INSULATED	PL	PROPERTY LINE	UNGND.	UNDERGROUND
C.M.P.	CORRIGATED METAL PANEL	INT.	INTERIOR	PPL	PUSH PLATE	UV	UNIT VENTILATOR
CRS.	COURSES	INV.	INVERT			U.N.O.	UNLESS NOTED OTHERWISE
		ISO.	ISOLATION	QTY.	QUANTITY	UPH.	UPHOLSTERY
DEM.	DEMOLISH / DEMOLITION			QT	QUARRY TILE		
DET.	DETAIL	JAN.	JANITOR'S CLOSET			V.B.	VAPOR BARRIER
DIAG.	DIAGONAL	J.T.	JOINT	RAD.	RADIUS	VIF	VERIFY IN FIELD
DIA.	DIAMETER			R.W.L.	RAIN WATER LEADER	VERT.	VERTICAL
DIFF.	DIFFUSER	LAM.	LAMINATE	RECPT.	RECEPTACLE, ELECTRIC	VEST.	VESTIBULE
DIM.	DIMENSION	LAV.	LAVATORY	REC.	RECESS (ED)	V.C.T.	VINYL COMPOSITION TILE
DISP.	DISPENSER	LH	LEFT HAND	R.C.P.	REFLECTED CEILING PLAN	V.W.C.	VINYL WALL COVERING
DR.	DOOR	LGT.	LENGTH	REF.	REFRIGERATOR		
DBL.	DOUBLE	LT.	LIGHT	REG.	REGISTER	WSCT.	WAINSCOT
DN.	DOWN	LT.P.	LIGHT PANEL	REINF.	REINFORCE (D) (ING) (MENT)	WC	WATER CLOSET
D.S.	DOWNSPOUT	LT.WT.	LIGHT WEIGHT	R.C.P.	REINFORCED CONCRETE PIPE	W.H.	WATER HEATER
DWG.	DRAWING	LF	LINEAR FEET	REQD.	REQUIRED	WT.	WEIGHT
D.F.	DRINKING FOUNTAIN	LTL.	LINTEL	RES.	RESILIENT	W.W.F.	WELDED WIRE FABRIC
D.I.P.	DUCTILE IRON PIPE	LVR.	LOUVER	R.B.	RESILIENT BASE	W/	WITH
		LG.	LONG	RET.	RETURN	W/O	WITHOUT
EA.	EACH			R.A.	RETURN AIR	WD.	WOOD
E.W.	EACH WAY	M.D.H.	MAGNETIC DOOR HOLDER	REV.	REVISION	WB	WOOD BASE
ELEC.	ELECTRIC	M.H.	MANHOLE	R.H.	RIGHT HAND		
E.C.	ELECTRIC CONTRACTOR	MFGR.	MANUFACTURER	R.O.W.	RIGHT OF WAY	XFE	EXISTING FIRE EXTINGUSIHER
ELEV.	ELEVATION	MARB.	MARBLE	RVT.	RIVET	CABINET	
EQ.	EQUAL	MT	MARBLE TILE	R.D.	ROOF DRAIN		
EQUIP.	EQUIPMENT	MKRBD.	MARKER BOARD	RF.H.	ROOF HATCH		
E.B.O.	EQUIPMENT BY OWNER			R.V.	ROOF VENT		
E.F.	EXHAUST FAN						

PLAN SYMBOLS

ALL SYMBOLS NOT NECESSARILY USED

EXISTING WALL TO REMAIN

EXISTING WALL TO BE REMOVED

NEW CONSTRUCTION - REFER TO WALL TYPES

EXISTING DOOR TO BE REMOVED

NEW DOOR - SEE DOOR SCHEDULE FOR ADDITIONAL INFORMATION

REFERENCE SYMBOLS

ALL SYMBOLS NOT NECESSARILY USED

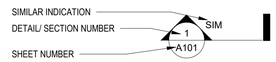

WALL SECTION

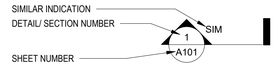

BUILDING SECTION

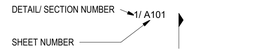

DETAIL SECTION

EXTERIOR ELEVATION

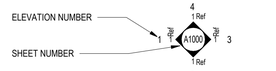

INTERIOR ELEVATION

LARGE SCALE BLOWUP OF PLAN OR DETAIL

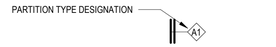

PARTITION TYPE

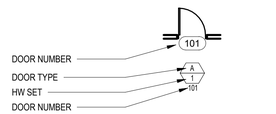

DOOR SYMBOL

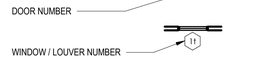

WINDOW/ LOUVER SYMBOL

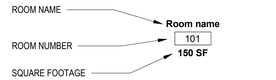

ROOM NAME AND NUMBER

KEYNOTE SYMBOLS

LEVEL ELEVATION

COLUMN GRID BUBBLE

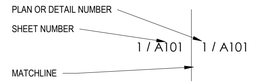

MATCH LINE

REVISION

EQUIPMENT TAG

MATERIALS LEGEND

ALL MATERIALS NOT NECESSARILY USED

EARTH

POROUS FILL

CONCRETE

C.M.U.

BRICK

STONE

STRUCTURAL STEEL

ROUGH LUMBER

BLOCKING

FINISHED WOOD

PLYWOOD

RIGID INSULATION

BATT INSULATION

GYPSUM DRYWALL

ALUMINUM

POLYCARBONATE

CJS ARCHITECTS

BUFFALO | ROCHESTER
www.cjsarchitects.com

PERMIT SET

FLINT AVE.

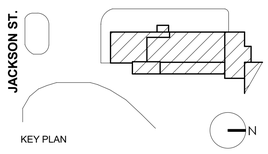

COLD SPRING CONSTRUCTION CO.

ADDITION & RENOVATION

43 JACKSON ST.
AKRON, NY14001

REV. #	DESCRIPTION	DATE

JOB NO.	2103
SCALE	1/4" = 1'-0"
ISSUE DATE	02/17/22
DRAWN BY	NAT
CHECKED BY	JMC

THIS IS A SINGLE SHEET OF A COHESIVE SET OF CONSTRUCTION DOCUMENTS (INCLUDING DRAWINGS AND SPECIFICATIONS). INTERPRETATION OF THE INFORMATION AS PRESENTED SHOULD BE BASED ON THE ENTIRE SET OF DOCUMENTS.

DRAWING TITLE

SYMBOLS, ABBREVIATIONS & GEN. NOTES

A-001

PERMIT SET

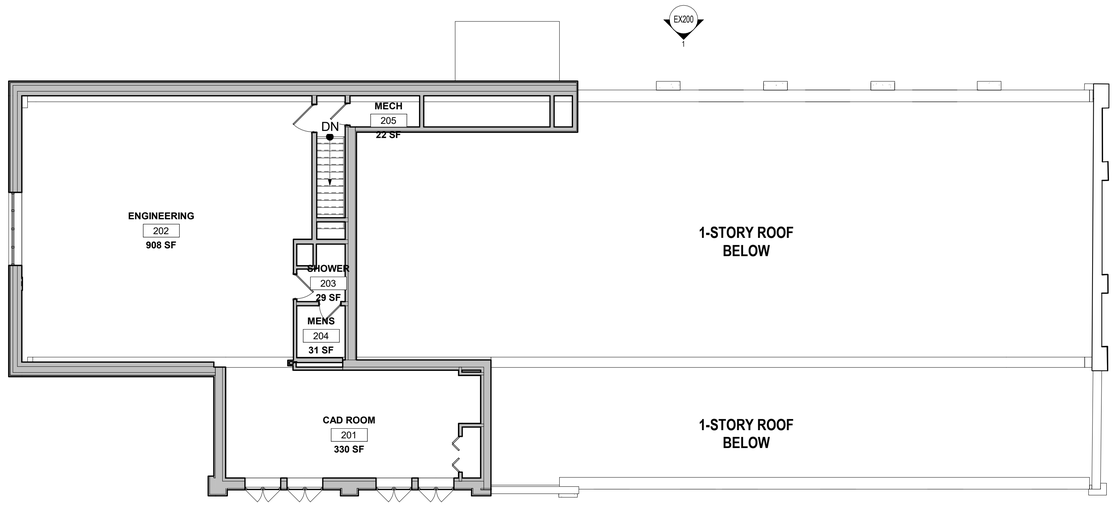

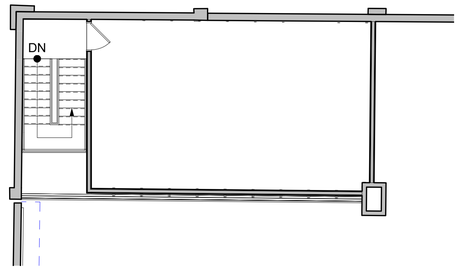

2 EX101 EX102_EXISTING SECOND FLOOR PLAN

1/8" = 1'-0"

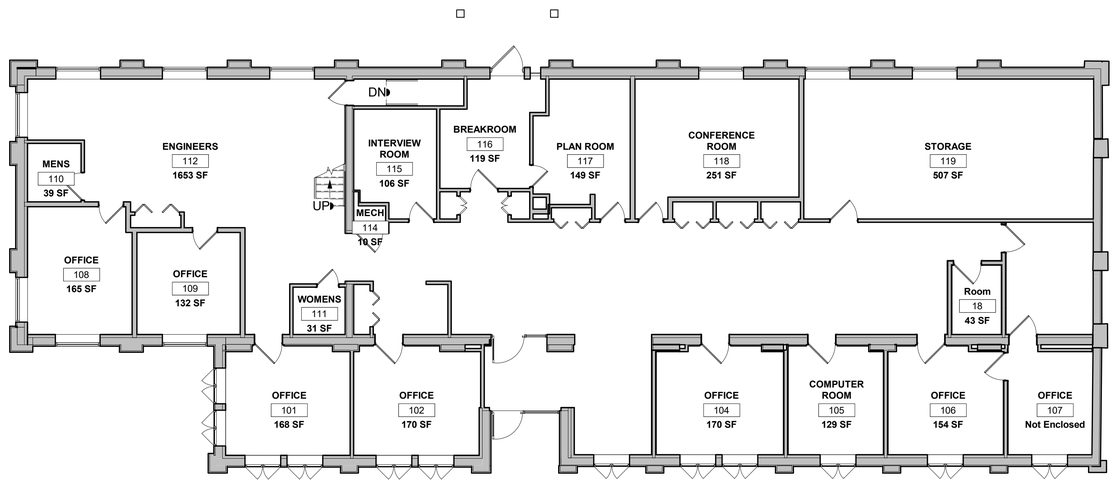

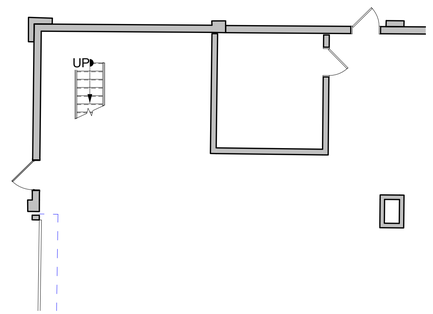

1 EX101 EXISTING FIRST FLOOR PLAN

1/8" = 1'-0"

CJS ARCHITECTS
BUFFALO | ROCHESTER
www.cjsarchitects.com

PERMIT SET

FLINT AVE.

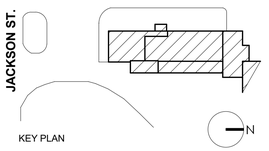

KEY PLAN

COLD SPRING
CONSTRUCTION CO.

ADDITION & RENOVATION

43 JACKSON ST.
AKRON, NY14001

REV. #	DESCRIPTION	DATE

JOB NO.	2103
SCALE	1/8" = 1'-0"
ISSUE DATE	02/17/22
DRAWN BY	NAT
CHECKED BY	JMC

THIS IS A SINGLE SHEET OF A COHESIVE
SET OF CONSTRUCTION DOCUMENTS
(INCLUDING DRAWINGS AND SPECIFICATIONS).
INTERPRETATION OF THE INFORMATION
AS PRESENTED SHOULD BE BASED ON
THE ENTIRE SET OF DOCUMENTS.

DRAWING TITLE

EXISTING FIRST & SECOND FLOOR PLAN

EX101

PERMIT SET

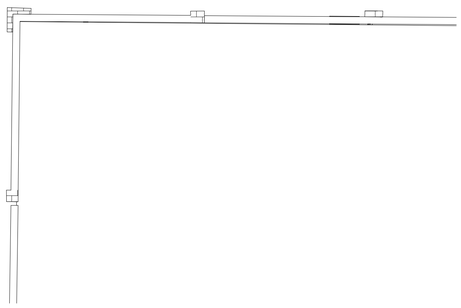

1 EX102 EXISTING ROOF PLAN
1/8" = 1'-0"

CJS ARCHITECTS
BUFFALO | ROCHESTER
www.cjsarchitects.com

PERMIT SET

FLINT AVE.

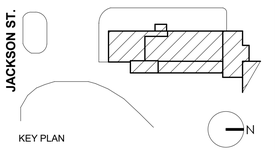

KEY PLAN

COLD SPRING
CONSTRUCTION CO.

ADDITION & RENOVATION

43 JACKSON ST.
AKRON, NY14001

REV. #	DESCRIPTION	DATE

JOB NO.	2103
SCALE	1/8" = 1'-0"
ISSUE DATE	02/17/22
DRAWN BY	NAT
CHECKED BY	JMC

THIS IS A SINGLE SHEET OF A COHESIVE
SET OF CONSTRUCTION DOCUMENTS
(INCLUDING DRAWINGS AND SPECIFICATIONS).
INTERPRETATION OF THE INFORMATION
AS PRESENTED SHOULD BE BASED ON
THE ENTIRE SET OF DOCUMENTS.

DRAWING TITLE

EXISTING ROOF PLAN

EX102

PERMIT SET

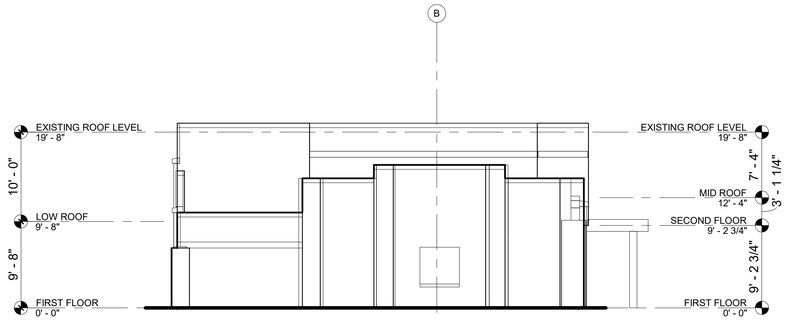

3 EX200 EXISTING NORTH ELEVATION
1/8" = 1'-0"

2 EX200 EXISTING EAST ELEVATION
1/8" = 1'-0"

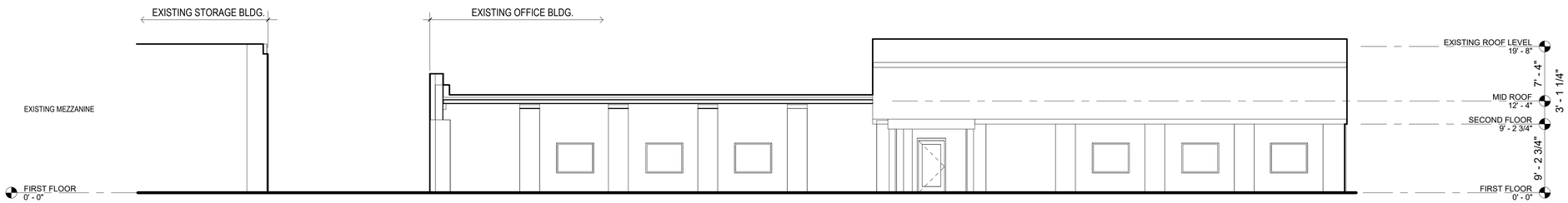

1 EX200 EXISTING WEST ELEVATION
1/8" = 1'-0"

CJS ARCHITECTS
BUFFALO | ROCHESTER
www.cjsarchitects.com

PERMIT SET

FLINT AVE.

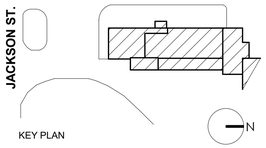

KEY PLAN

COLD SPRING
CONSTRUCTION CO.

ADDITION & RENOVATION

43 JACKSON ST.
AKRON, NY14001

REV. #	DESCRIPTION	DATE

JOB NO.	2103
SCALE	1/8" = 1'-0"
ISSUE DATE	02/17/22
DRAWN BY	NAT
CHECKED BY	JMC

THIS IS A SINGLE SHEET OF A COHESIVE SET OF CONSTRUCTION DOCUMENTS (INCLUDING DRAWINGS AND SPECIFICATIONS). INTERPRETATION OF THE INFORMATION AS PRESENTED SHOULD BE BASED ON THE ENTIRE SET OF DOCUMENTS.

DRAWING TITLE

EXISTING ELEVATION

EX200

PERMIT SET

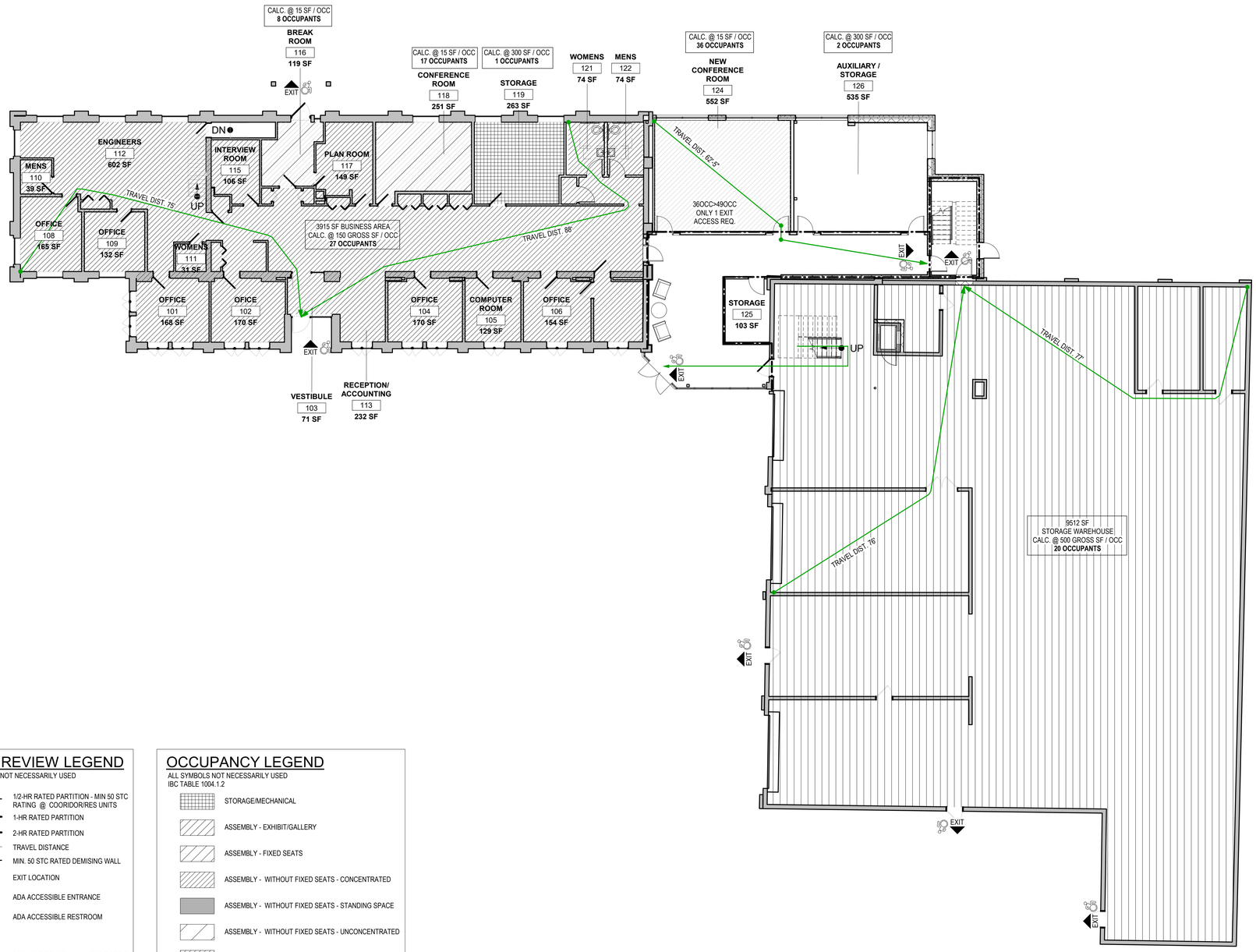

1 LS-01 FIRST FLOOR LIFE SAFETY
3/32" = 1'-0"

CODE REVIEW LEGEND

ALL SYMBOLS NOT NECESSARILY USED

- 1/2-HR RATED PARTITION - MIN 50 STC RATING @ COORIDOR/RES UNITS
- 1-HR RATED PARTITION
- 2-HR RATED PARTITION
- TRAVEL DISTANCE
- MIN. 50 STC RATED DEMISING WALL
- EXIT — EXIT LOCATION
- EXIT — ADA ACCESSIBLE ENTRANCE
- ADA ACCESSIBLE RESTROOM
- DRINKING FOUNTAIN / WATER BOTTLE FILLING STATION
- TABLE 705.4 STARTING POINT FOR TRAVEL DISTANCE
- EXIT SIGN
- FE — SEMI-RECESSED FIRE EXTINGUISHER CABINET - REF SPECS.
- SEMI-RECESSED FIRE EXTINGUISHER CABINET - RATED - REF SPECS.

OCCUPANCY LEGEND

ALL SYMBOLS NOT NECESSARILY USED
IBC TABLE 1004.1.2

- STORAGE/MECHANICAL
- ASSEMBLY - EXHIBIT/GALLERY
- ASSEMBLY - FIXED SEATS
- ASSEMBLY - WITHOUT FIXED SEATS - CONCENTRATED
- ASSEMBLY - WITHOUT FIXED SEATS - STANDING SPACE
- ASSEMBLY - WITHOUT FIXED SEATS - UNCONCENTRATED
- BUSINESS
- EDUCATIONAL - CLASSROOM
- EDUCATIONAL - SHOP/VOCATIONAL
- KITCHENS - COMMERCIAL
- LIBRARY - READING ROOM
- LOCKER ROOMS
- RESIDENTIAL
- STAGES/PLATFORMS
- WAREHOUSES

CODE REVIEW NOTES

PROJECT CLASSIFICATION: EXISTING BUILDING - ADDITION <50%
ALTERATION LEVEL 2

OCCUPANCY CLASSIFICATION:

MIXED USE - NOT SEPARATED
B (OFFICE SPACE & ASSEMBLY <50 OCC.) - BUSINESS USE (BCNYS 304.1)
S-1 (STORAGE) - MODERATE HAZ. STORAGE (BCNYS 311.2)

CONSTRUCTION TYPE CLASSIFICATION: IIIB

BUILDING HEIGHTS AND AREAS: S-1 (MOST RESTRICTIVE) (NO SPRINKLER)

	PER TABLE	ALLOWABLE (FRONTAGE)	ACTUAL
HEIGHT	2 STORIES/ 55'	2 STORIES/55'	2 STORIES/22'-6"
AREA	17,500 SF NS	47,603 SF NS	+/-20,458 SF NS 1ST FL:16,670 SF 2ND FL:3,787 SF

FIRE RATING FOR:

NON-SEPARATED OCC.: B / S-1 = 0 HR (NOT REQUIRED) (BCNYS 508.3.2)

STAIR & ELEVATOR ENCLOSURES: 2 STORIES - 1 HR

SHAFTS: (BCNYS 713.4)
CONNECTING LESS THAN FOUR STORIES - 1 HR
CONNECTING FOUR STORIES OR MORE - 2 HRS

CORRIDORS: .1 HRS - S & B OCC. W/O SPRINKLERS (BCNYS TABLE 1020.1)

BUILDING ELEMENTS (FIRE RATINGS): (BCNYS TABLE 601)

CONSTRUCTION TYPE:	3B
STRUCTURAL FRAME	0
INT. BEARING WALLS	0
EXT. BEARING WALLS	2
EXT. NON BEARING WALLS	EXIST. TO REMAIN PER EXISTING BUILDING CODE SECTION 912.6
INT. NON BEARING WALLS	0
FLOOR CONSTRUCTION	0
ROOF CONSTRUCTION	0

OCCUPANCY LOAD: (BCNYS TABLE 1004.1.1)

-FIRST FLOOR FOR ALL:	110 OCCUPANTS
-SECOND FLOOR FOR ALL:	73 OCCUPANTS
-TOTAL:	**183 OCCUPANTS**
FIRST FLOOR ADDITION ONLY:	38 OCCUPANTS
SECOND FLOOR ADDITION ONLY:	61 OCCUPANTS
TOTAL FOR ADDITION ONLY:	**99 OCCUPANTS**

EGRESS REQUIREMENTS: (BCNYS TABLE 1006.3.2)

EXITS: 1ST FLOOR - 2 EXITS REQUIRED
2ND FLOOR - 2 EXITS REQUIRED

REF. PLANS FOR BUILDING AND TENANT EXIT LOCATIONS

TRAVEL DISTANCE: <200' IN OCC. S-1 & B NOT SPRINKLED BLDG

MAX COMMON PATH OF EGRESS: B / S - 75' PER 1006.2.1
A - 75' AT <50 OCC. - PER EXCEPTION 1029.8

EGRESS WIDTH: (BCNYS TABLE 1005.1)

STAIRS - 0.3" PER OCC. & NOT LESS THAN 44"
-NOT LESS THAN 36" FOR STAIRS SERVING AN OCC.
LOAD OF LESS THAN 50 (EXCEPTION BCNYS 1011.2)

OTHER COMPONENTS - 0.2" PER OCC.
-NOT LESS THAN 44" TO BE PROVIDED @ CORRIDORS
AND 34" AT DOORS (BCNYS 1020.2)
-WHERE OCCUPANT LOAD SERVED BY CORRIDOR IS <50, NOT LESS THAN 36" IS PERMITTED (BCNYS 1020.2)

AREA INCREASE DUE TO FRONTAGE - CALC:

$A_w = [A_t + (NS \times I_f)] \times S_a$

-MOST RESTRICTIVE S-1 OCCUPANCY, NOT SPRINKLERED
$A_w = [17,500 + (17,500 \times I_f)] \times 2$

$I_f = [F/P - 0.25]\ W/30$
[516.75/818.75 - 0.25] W/30
[0.38] W/30

$W = (32.92 \times 30 + 22.92 \times 30 + 13.75 \times 30 + 98.83 \times 30 + 7.75 \times 30 + 23.92 \times 30 + 79.5 \times 30 + 66.17 \times 30 + 26 \times 30 + 26.08 \times 30 + Skip + 51.17 \times 30 + 18.58 \times 30 + 8.75 \times 28.75 + 13.75 \times 30) / 516.75$
= 14,691.76 / 516.75
= 28.43 ft weighted average of qualifying frontage

[0.38] 28.43/30 = .3601 = IF

$A_w = [17,500 + (17,500 \times .3601)] \times 2$
23,801.75 SF PER FLOOR
AND 47,603.50 SF TOTAL AREA ALLOWABLE

FIRE PROTECTION:

SPRINKLER SYSTEM: NOT PROVIDED

STANDPIPES: NOT PROVIDED

FIRE ALARM SYSTEM: NOT PROVIDED
- MANUAL SYSTEM NOT REQ'D PER BCNYS 907.2.2

FIRE EXTINGUISHERS: TO BE PROVIDED (FCNYS 906)

ADA REQUIREMENTS:

PER BCNYS CHAPTER 11, EBCNYS - SECTION 705, 806, AND 906 & ANSI 117.1 2009

ACCESSIBILITY 2018 IBC 1105 - SECTION 1105.1.3 - RESTRICTED ENTRANCES

ACCESSIBILITY ENTRANCES REQIRED - 1 / PROVIDED - 8

ENERGY CODE:

HISTORIC BUILDING - ENERGY CODE OF NYS COMPLIANCE NOT REQUIRED

ORIGINAL DOCUMENT PRODUCED IN COLOR - DO NOT REPRODUCE IN BLACK & WHITE, DO NOT UTILIZE FOR CONSTRUCTION PURPOSES IF REPRODUCED IN BLACK & WHITE.

CJS ARCHITECTS
BUFFALO | ROCHESTER
www.cjsarchitects.com

PERMIT SET

FLINT AVE.

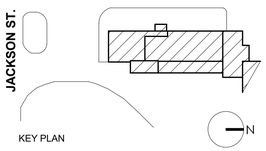

KEY PLAN

COLD SPRING CONSTRUCTION CO.

ADDITION & RENOVATION

43 JACKSON ST.
AKRON, NY14001

REV. #	DESCRIPTION	DATE

JOB NO.	2103
SCALE	As indicated
ISSUE DATE	02/17/22
DRAWN BY	NAT
CHECKED BY	JMC

THIS IS A SINGLE SHEET OF A COHESIVE SET OF CONSTRUCTION DOCUMENTS (INCLUDING DRAWINGS AND SPECIFICATIONS). INTERPRETATION OF THE INFORMATION AS PRESENTED SHOULD BE BASED ON THE ENTIRE SET OF DOCUMENTS.

DRAWING TITLE

FIRST FLOOR LIFE SAFETY

LS-01

PERMIT SET

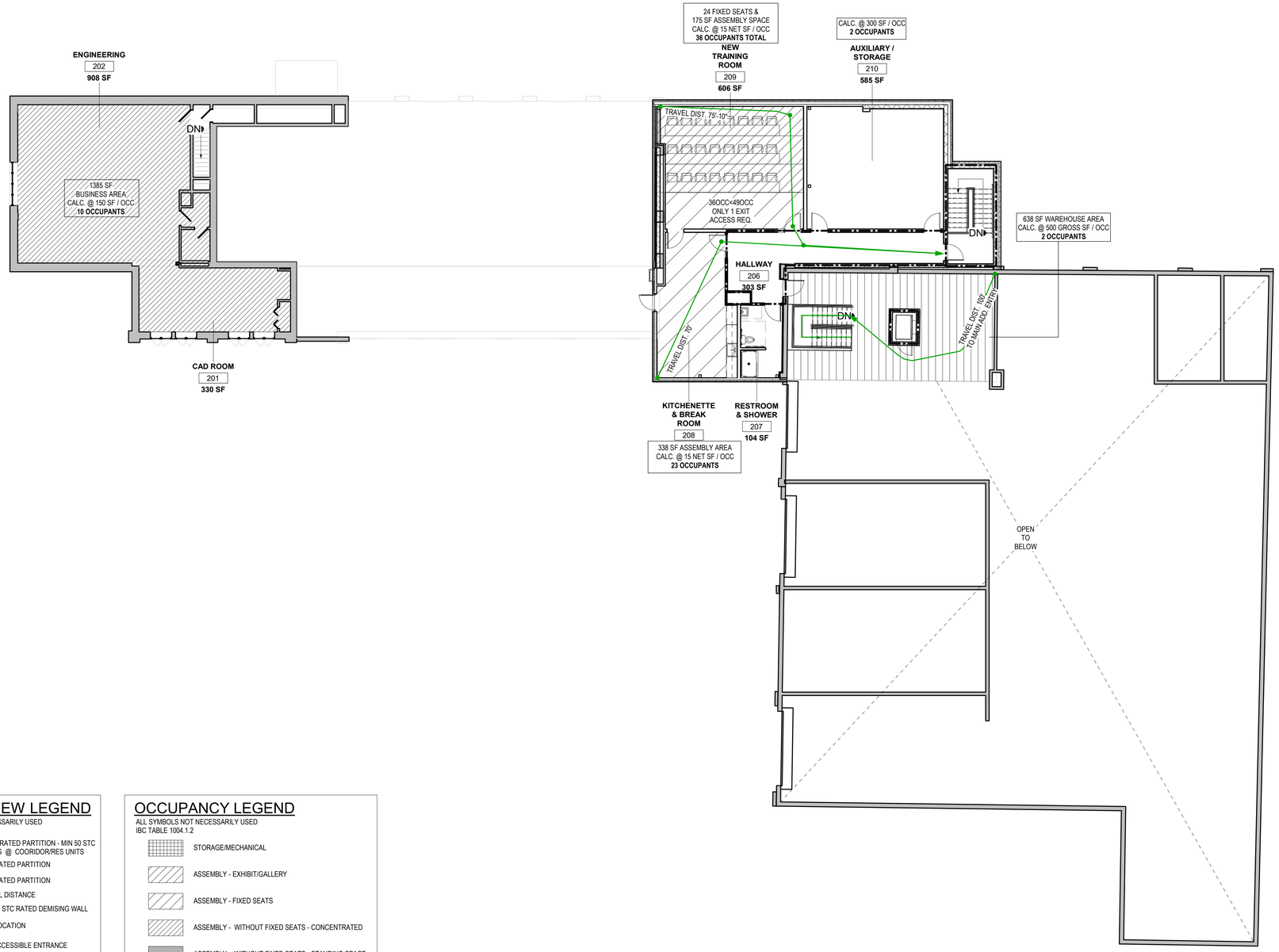

1 LS-02 SECOND FLOOR LIFE SAFETY
3/32" = 1'-0"

CODE REVIEW LEGEND

ALL SYMBOLS NOT NECESSARILY USED

- 1/2-HR RATED PARTITION - MIN 50 STC RATING @ COORIDOR/RES UNITS
- 1-HR RATED PARTITION
- 2-HR RATED PARTITION
- TRAVEL DISTANCE
- MIN. 50 STC RATED DEMISING WALL
- EXIT — EXIT LOCATION
- EXIT — ADA ACCESSIBLE ENTRANCE
- ADA ACCESSIBLE RESTROOM
- DRINKING FOUNTAIN / WATER BOTTLE FILLING STATION
- TABLE 705.4 STARTING POINT FOR TRAVEL DISTANCE
- EXIT SIGN
- FE — SEMI-RECESSED FIRE EXTINGUISHER CABINET - REF SPECS.
- SEMI-RECESSED FIRE EXTINGUISHER CABINET - RATED - REF SPECS.

OCCUPANCY LEGEND

ALL SYMBOLS NOT NECESSARILY USED
IBC TABLE 1004.1.2

- STORAGE/MECHANICAL
- ASSEMBLY - EXHIBIT/GALLERY
- ASSEMBLY - FIXED SEATS
- ASSEMBLY - WITHOUT FIXED SEATS - CONCENTRATED
- ASSEMBLY - WITHOUT FIXED SEATS - STANDING SPACE
- ASSEMBLY - WITHOUT FIXED SEATS - UNCONCENTRATED
- BUSINESS
- EDUCATIONAL - CLASSROOM
- EDUCATIONAL - SHOP/VOCATIONAL
- KITCHENS - COMMERCIAL
- LIBRARY - READING ROOM
- LOCKER ROOMS
- RESIDENTIAL
- STAGES/PLATFORMS
- WAREHOUSES

CODE REVIEW NOTES

PROJECT CLASSIFICATION: EXISTING BUILDING - ADDITION <50%
ALTERATION LEVEL 2

OCCUPANCY CLASSIFICATION:

MIXED USE - NOT SEPARATED
B (OFFICE SPACE & ASSEMBLY <50 OCC.) - BUSINESS USE (BCNYS 304.1)
S-1 (STORAGE) - MODERATE HAZ. STORAGE (BCNYS 311.2)

CONSTRUCTION TYPE CLASSIFICATION: IIIB

BUILDING HEIGHTS AND AREAS: S-1 (MOST RESTRICTIVE) (NO SPRINKLER)

	PER TABLE	ALLOWABLE (FRONTAGE)	ACTUAL
HEIGHT	2 STORIES/ 55'	2 STORIES/55'	2 STORIES/22'-6"
AREA	17,500 SF NS	47,603 SF NS	+/-20,458 SF NS 1ST FL:16,670 SF 2ND FL:3,787 SF

FIRE RATING FOR:

NON-SEPARATED OCC.: B / S-1 = 0 HR (NOT REQUIRED) (BCNYS 508.3.2)

STAIR & ELEVATOR ENCLOSURES: 2 STORIES - 1 HR

SHAFTS: (BCNYS 713.4)
CONNECTING LESS THAN FOUR STORIES - 1 HR
CONNECTING FOUR STORIES OR MORE - 2 HRS

CORRIDORS: .1 HRS - S & B OCC. W/O SPRINKLERS (BCNYS TABLE 1020.1)

BUILDING ELEMENTS (FIRE RATINGS): (BCNYS TABLE 601)

CONSTRUCTION TYPE:	3B
STRUCTURAL FRAME	0
INT. BEARING WALLS	0
EXT. BEARING WALLS	2
EXT. NON BEARING WALLS	EXIST. TO REMAIN PER EXISTING BUILDING CODE SECTION 912.6
INT. NON BEARING WALLS	0
FLOOR CONSTRUCTION	0
ROOF CONSTRUCTION	0

OCCUPANCY LOAD: (BCNYS TABLE 1004.1.1)

-FIRST FLOOR FOR ALL: 110 OCCUPANTS
-SECOND FLOOR FOR ALL: 73 OCCUPANTS
-TOTAL: **183 OCCUPANTS**

FIRST FLOOR ADDITION ONLY: 38 OCCUPANTS
SECOND FLOOR ADDITION ONLY: 61 OCCUPANTS
TOTAL FOR ADDITION ONLY: **99 OCCUPANTS**

EGRESS REQUIREMENTS: (BCNYS TABLE 1006.3.2)

EXITS: 1ST FLOOR - 2 EXITS REQUIRED
2ND FLOOR - 2 EXITS REQUIRED

REF. PLANS FOR BUILDING AND TENANT EXIT LOCATIONS

TRAVEL DISTANCE: <200' IN OCC. S-1 & B NOT SPRINKLED BLDG

MAX COMMON PATH OF EGRESS: B / S - 75' PER 1006.2.1
A - 75' AT <50 OCC. - PER EXCEPTION 1029.8

EGRESS WIDTH: (BCNYS TABLE 1005.1)

STAIRS - 0.3" PER OCC. & NOT LESS THAN 44"
-NOT LESS THAN 36" FOR STAIRS SERVING AN OCC.
LOAD OF LESS THAN 50 (EXCEPTION BCNYS 1011.2)

OTHER COMPONENTS - 0.2" PER OCC.
-NOT LESS THAN 44" TO BE PROVIDED @ CORRIDORS
AND 34" AT DOORS (BCNYS 1020.2)
-WHERE OCCUPANT LOAD SERVED BY CORRIDOR IS <50, NOT LESS THAN 36" IS PERMITTED (BCNYS 1020.2)

AREA INCREASE DUE TO FRONTAGE - CALC:

$A_w = [A_t + (NS \times I_f)] \times S_a$

-MOST RESTRICTIVE S-1 OCCUPANCY, NOT SPRINKLERED
$A_w = [17,500 + (17,500 \times I_f)] \times 2$

$I_f = [F/P - 0.25]\ W/30$
[516.75/818.75 - 0.25] W/30
[0.38] W/30

$W = (32.92x30 + 22.92x30 + 13.75x30 + 98.83x30 + 7.75x30 + 23.92x30 + 79.5x30 + 66.17x30 + 26x30 +26.08x30 + Skip + 51.17x30 +18.58x30 + 8.75x28.75 + 13.75x30) / 516.75$
= 14,691.76 / 516.76
= 28.43 ft weighted average of qualifying frontage

[0.38] 28.43/30 = .3601 = IF

$A_w = [17,500 + (17,500 \times .3601)] \times 2$
23,801.75 SF PER FLOOR
AND 47,603.50 SF TOTAL AREA ALLOWABLE

FIRE PROTECTION:

SPRINKLER SYSTEM: NOT PROVIDED

STANDPIPES: NOT PROVIDED

FIRE ALARM SYSTEM: NOT PROVIDED
- MANUAL SYSTEM NOT REQ'D PER BCNYS 907.2.2

FIRE EXTINGUISHERS: TO BE PROVIDED (FCNYS 906)

ADA REQUIREMENTS:

PER BCNYS CHAPTER 11, EBCNYS - SECTION 705, 806, AND 906 & ANSI 117.1 2009

ACCESSIBILITY 2018 IBC 1105 - SECTION 1105.1.3 - RESTRICTED ENTRANCES

ACCESSIBILITY ENTRANCES REQIRED - 1 / PROVIDED - 8

ENERGY CODE:

HISTORIC BUILDING - ENERGY CODE OF NYS COMPLIANCE NOT REQUIRED

CJS ARCHITECTS
BUFFALO | ROCHESTER
www.cjsarchitects.com

PERMIT SET

FLINT AVE.

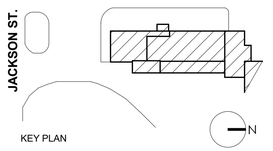

KEY PLAN

COLD SPRING
CONSTRUCTION CO.

ADDITION & RENOVATION

43 JACKSON ST.
AKRON, NY14001

REV. #	DESCRIPTION	DATE

JOB NO.	2103
SCALE	As indicated
ISSUE DATE	02/17/22
DRAWN BY	NAT
CHECKED BY	JMC

THIS IS A SINGLE SHEET OF A COHESIVE
SET OF CONSTRUCTION DOCUMENTS
(INCLUDING DRAWINGS AND SPECIFICATIONS).
INTERPRETATION OF THE INFORMATION
AS PRESENTED SHOULD BE BASED ON
THE ENTIRE SET OF DOCUMENTS.

DRAWING TITLE

SECOND FLOOR LIFE SAFETY

LS-02

PERMIT SET

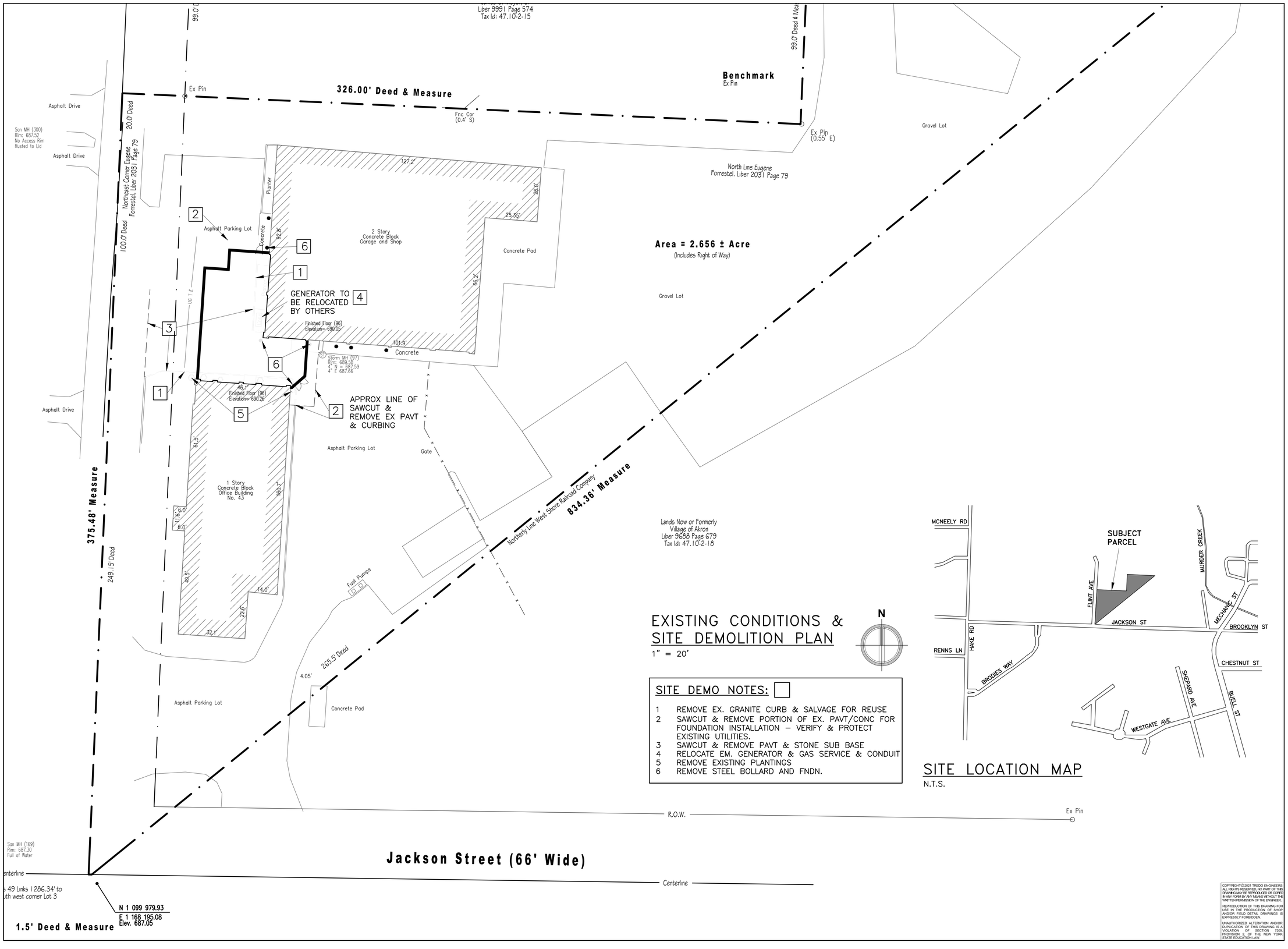

EXISTING CONDITIONS & SITE DEMOLITION PLAN

1" = 20'

N

SITE DEMO NOTES:

1. REMOVE EX. GRANITE CURB & SALVAGE FOR REUSE
2. SAWCUT & REMOVE PORTION OF EX. PAVT/CONC FOR FOUNDATION INSTALLATION – VERIFY & PROTECT EXISTING UTILITIES.
3. SAWCUT & REMOVE PAVT & STONE SUB BASE
4. RELOCATE EM. GENERATOR & GAS SERVICE & CONDUIT
5. REMOVE EXISTING PLANTINGS
6. REMOVE STEEL BOLLARD AND FNDN.

SITE LOCATION MAP

N.T.S.

COPYRIGHT© 2021 TREDO ENGINEERS
ALL RIGHTS RESERVED, NO PART OF THIS DRAWING MAY BE REPRODUCED OR COPIED IN ANY FORM BY ANY MEANS WITHOUT THE WRITTEN PERMISSION OF THE ENGINEER.
REPRODUCTION OF THIS DRAWING FOR USE IN THE PRODUCTION OF SHOP AND/OR FIELD DETAIL DRAWINGS IS EXPRESSLY FORBIDDEN.
UNAUTHORIZED ALTERATION AND/OR DUPLICATION OF THIS DRAWING IS A VIOLATION OF SECTION 7209, PROVISION 2, OF THE NEW YORK STATE EDUCATION LAW.

CJS ARCHITECTS
BUFFALO | ROCHESTER
www.cjsarchitects.com

tredo
ENGINEERS
CIVIL | STRUCTURAL | ENGINEERING
755 Se□eca St. #202
B□□a□, NY 14210
www.tredoe□□□eers.com

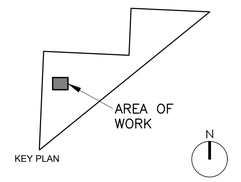

COLD SPRING
CONSTRUCTION CO.

ADDITION & RENOVATION

43 JACKSON STREET
AKRON, NY 14001

REV. #	DESCRIPTION	DATE
1	REVISED FLOOR PLAN	2/18/22

JOB NO.	2103 (T.E. JOB #21-10)
SCALE	AS SHOWN
ISSUE DATE	11/15/21
DRAWN BY	RPC
CHECKED BY	AVM

THIS IS A SINGLE SHEET OF A COHESIVE SET OF CONSTRUCTION DOCUMENTS (INCLUDING DRAWINGS AND SPECIFICATIONS). INTERPRETATION OF THE INFORMATION AS PRESENTED SHOULD BE BASED ON THE ENTIRE SET OF DOCUMENTS.

DRAWING TITLE

EXISTING CONDITIONS & SITE DEMOLITION PLAN

SP101

PERMIT SET

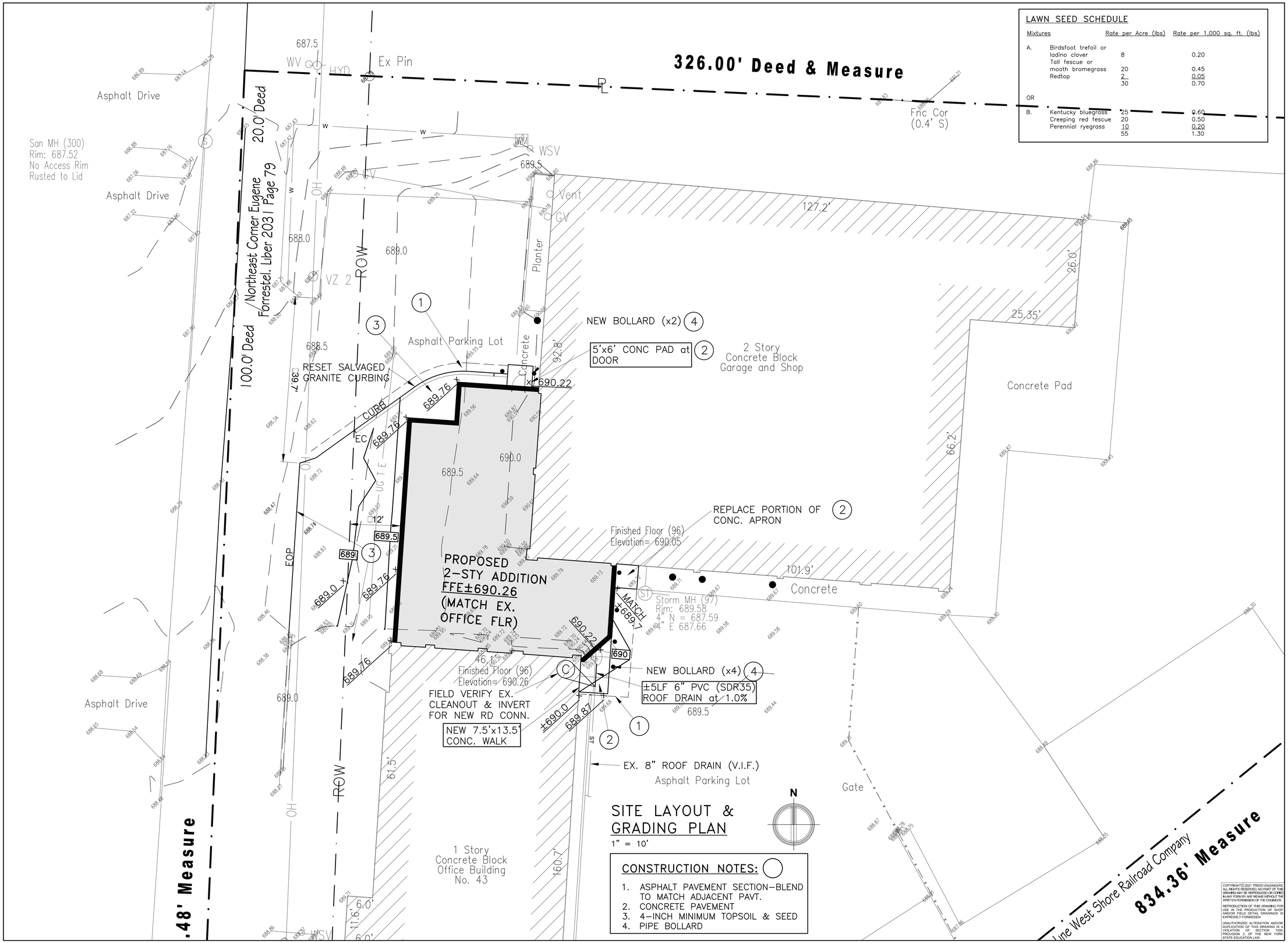

LAWN SEED SCHEDULE

Mixtures		Rate per Acre (lbs)	Rate per 1,000 sq. ft. (lbs)
A.	Birdsfoot trefoil or ladino clover	8	0.20
	Tall fescue or mooth bromegrass	20	0.45
	Redtop	2	0.05
		30	0.70
OR			
B.	Kentucky bluegrass	25	0.60
	Creeping red fescue	20	0.50
	Perennial ryegrass	10	0.20
		55	1.30

SITE LAYOUT & GRADING PLAN

1" = 10'

CONSTRUCTION NOTES:

1. ASPHALT PAVEMENT SECTION–BLEND TO MATCH ADJACENT PAVT.
2. CONCRETE PAVEMENT
3. 4–INCH MINIMUM TOPSOIL & SEED
4. PIPE BOLLARD

COPYRIGHT© 2021 TREDO ENGINEERS ALL RIGHTS RESERVED. NO PART OF THIS DRAWING MAY BE REPRODUCED OR COPIED IN ANY FORM BY ANY MEANS WITHOUT THE WRITTEN PERMISSION OF THE ENGINEER.

REPRODUCTION OF THIS DRAWING FOR USE IN THE PRODUCTION OF SHOP AND/OR FIELD DETAIL DRAWINGS IS EXPRESSLY FORBIDDEN.

UNAUTHORIZED ALTERATION AND/OR DUPLICATION OF THIS DRAWING IS A VIOLATION OF SECTION 7209, PROVISION 2, OF THE NEW YORK STATE EDUCATION LAW.

CJS ARCHITECTS
BUFFALO | ROCHESTER
www.cjsarchitects.com

tredo ENGINEERS
CIVIL | STRUCTURAL | ENGINEERING
755 Seneca St. #202
Buffalo, NY 14210
www.tredoengineers.com

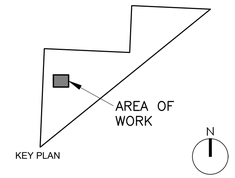

COLD SPRING
CONSTRUCTION CO.

ADDITION & RENOVATION

43 JACKSON STREET
AKRON, NY 14001

REV. #	DESCRIPTION	DATE
1	REVISED FLOOR PLAN	2/18/22

JOB NO.	2103 (T.E. JOB #21-10.1)
SCALE	AS SHOWN
ISSUE DATE	1/24/22
DRAWN BY	RPC
CHECKED BY	AVM

THIS IS A SINGLE SHEET OF A COHESIVE SET OF CONSTRUCTION DOCUMENTS (INCLUDING DRAWINGS AND SPECIFICATIONS). INTERPRETATION OF THE INFORMATION AS PRESENTED SHOULD BE BASED ON THE ENTIRE SET OF DOCUMENTS.

DRAWING TITLE

SITE LAYOUT & GRADING PLAN

SP102

PERMIT SET

GENERAL SITE NOTES

1. ALL WORK SHALL BE IN ACCORDANCE WITH THE LATEST RULES AND REGULATIONS OF THE VILLAGE OF AKRON & NEW YORK STATE DEPT. OF TRANSPORTATION SPECIFICATIONS.
2. INSTALL ALL MATERIALS TO THE MANUFACTURER'S RECOMMENDATIONS AND BEST STANDARDS OF THE TRADE INVOLVED.
3. SUBSTITUTIONS SHALL BE MADE ONLY WITH OWNER APPROVAL AND SHALL BE EQUIVALENT QUALITY TO WHAT IS SPECIFIED.
4. WORK SHALL BE COMPLETED IN STRICT ACCORDANCE WITH ALL LOCAL CODES AND OSHA SAFETY RULES AND REGULATIONS.
5. VERIFY ALL EXISTING CONDITIONS AND DIMENSIONS AT THE SITE. NOTIFY OWNER OF ANY DISCREPANCIES IN CONDITIONS SHOWN ON THE DRAWINGS PRIOR TO PROCEEDING WITH THE WORK.
6. CONTRACTORS SHALL BE RESPONSIBLE FOR THE PROTECTION OF ANY EXISTING STRUCTURES TO REMAIN AND ANY FINISH MATERIAL INSTALLED WHILE WORKING ON OTHER COMPONENTS.
7. CONTRACTOR SHALL KEEP THE JOB SITE FREE OF DEBRIS AND MAKE FINAL CLEANUP TO THE SATISFACTION OF THE OWNER.
8. CONTRACTOR SHALL ASCERTAIN THE LOCATION OF ALL UTILITIES PRIOR TO CONSTRUCTION SO THAT THIS WORK DOES NOT DISTURB EXISTING LINES AND/OR INSTALLATIONS. COORDINATE ALL WORK WITH THE APPLICABLE UTILITY COMPANIES.
9. CONTRACTOR SHALL OBTAIN AND PAY FOR ALL PERMITS NECESSARY TO PERFORM THE WORK.
10. REFER TO ARCHITECTURAL DRAWINGS FOR EXACT BUILDING DIMENSIONS AND UTILITY CONNECTIONS.
11. ALL UTILITY TRENCHES UNDER PAVEMENT, CURBS, SIDEWALKS, AND DRIVEWAYS SHALL BE FULLY BACKFILLED WITH No 2 CRUSHER RUN STONE AND PROPERLY COMPACTED TO AVOID SETTLEMENT.
12. CONTRACTOR SHALL REPLACE IN KIND ANY EXISTING IMPROVEMENTS TO REMAIN THAT ARE DAMAGED DURING CONSTRUCTION. THIS SHALL INCLUDE, BUT NOT BE LIMITED TO, CURBS, ROAD PAVEMENTS, LANDSCAPING, SIDEWALKS, AND EXISTING UTILITIES.

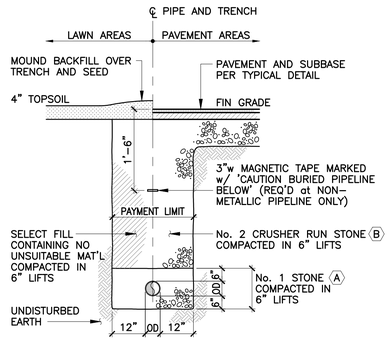

NOTES:
1. PIPE SHALL BE IN ACCORDANCE w/ MANUFACTURER'S RECOMMENDATIONS
2. TRENCHING OPERATIONS SHALL INCLUDE ALL NECESSARY DEWATERING
3. TRENCH DETAILS ARE ONLY SHOWN FOR MATERIAL PLACEMENT PURPOSES
4. AN OSHA APPROVED MOVEABLE PROTECTIVE TRENCH SHIELD MAY BE USED.

MATERIALS:
(A) No. 1 STONE WITH A GRADATION CONFORMING TO NYSDOT SECTION 703-02, LATEST EDITION. THE CRUSHED STONE SHALL BE WELL GRADED WITH NO PARTICLES LARGER THAN (1) INCH AND HAVING A MAX. GRADATION MEETING THE LIMITS DESCRIBED IN THE SPECIFICATIONS. NO SLAG SHALL BE USED IN PLACE OF MATERIAL 'A'.
(B) No. 2 CRUSHER RUN STONE OR No. 2 RUN OF CRUSHED GRAVEL WITH A GRADATION CONFORMING WITH NYSDOT SECTION 304-2.02 TYPE 4 AND NYSDOT SECTION 703-02 (COMPACTED IN 6" LIFTS TO 90% DENSITY). NO SLAG SHALL BE USED IN PLACE OF MATERIAL 'B'.

4 UTILITY TRENCH SECTION

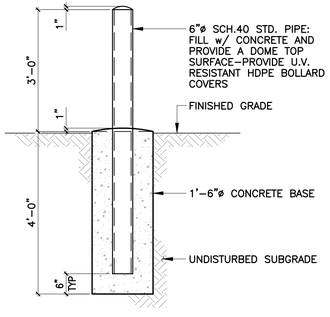

3 STEEL PIPE BOLLARD

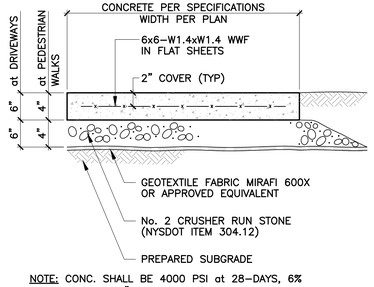

NOTE: CONC. SHALL BE 4000 PSI at 28-DAYS, 6% AIR-ENTRAINED, 4" MAX. SLUMP-PROVIDE LT. BROOM FINISH PERPENDICULAR TO DIRECTION OF TRAFFIC

TYPICAL CONCRETE SIDEWALK

2

ITEM	DESCRIPTION	NYSDOT REF.	DEPTH
1	TOP COURSE	402.099803-9.5 F2-80	1-1/2"
2	BINDER COURSE	402.198203-19 F9-80	2"
3	NOT USED		
4	SUBBASE COURSE	304.12000	8"
5	GEOTEXTILE FABRIC (NONWOVEN/HEAT BONDED)		
6	TACK COAT ITEM	407.01020	

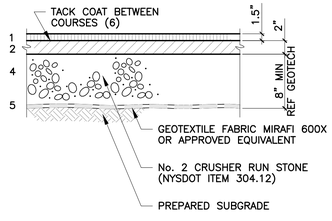

TYPICAL TYPE I BITUMINOUS PAVEMENT SECTION

1

CJS ARCHITECTS
BUFFALO | ROCHESTER
www.cjsarchitects.com

tredo ENGINEERS
CIVIL | STRUCTURAL | ENGINEERING
755 Seneca St. #202
Buffalo, NY 14210
www.tredoengineers.com

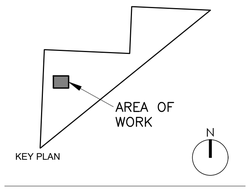

COLD SPRING CONSTRUCTION CO.

ADDITION & RENOVATION

43 JACKSON STREET
AKRON, NY 14001

REV. #	DESCRIPTION	DATE
1	REISSUED	2/18/22

JOB NO.	2103 (T.E. JOB #21-10)
SCALE	AS SHOWN
ISSUE DATE	11/15/21
DRAWN BY	RPC
CHECKED BY	AVM

THIS IS A SINGLE SHEET OF A COHESIVE SET OF CONSTRUCTION DOCUMENTS (INCLUDING DRAWINGS AND SPECIFICATIONS). INTERPRETATION OF THE INFORMATION AS PRESENTED SHOULD BE BASED ON THE ENTIRE SET OF DOCUMENTS.

DRAWING TITLE

SITE LAYOUT & DRAINAGE PLAN

SP102

PERMIT SET

COPYRIGHT© 2021 TREDO ENGINEERS ALL RIGHTS RESERVED. NO PART OF THIS DRAWING MAY BE REPRODUCED OR COPIED IN ANY FORM BY ANY MEANS WITHOUT THE WRITTEN PERMISSION OF THE ENGINEER.

REPRODUCTION OF THIS DRAWING FOR USE IN THE PRODUCTION OF SHOP AND/OR FIELD DETAIL DRAWINGS IS EXPRESSLY FORBIDDEN.

UNAUTHORIZED ALTERATION AND/OR REPRODUCTION OF THIS DRAWING IS A VIOLATION OF SECTION 7209, PROVISION 2, OF THE NEW YORK STATE EDUCATION LAW.

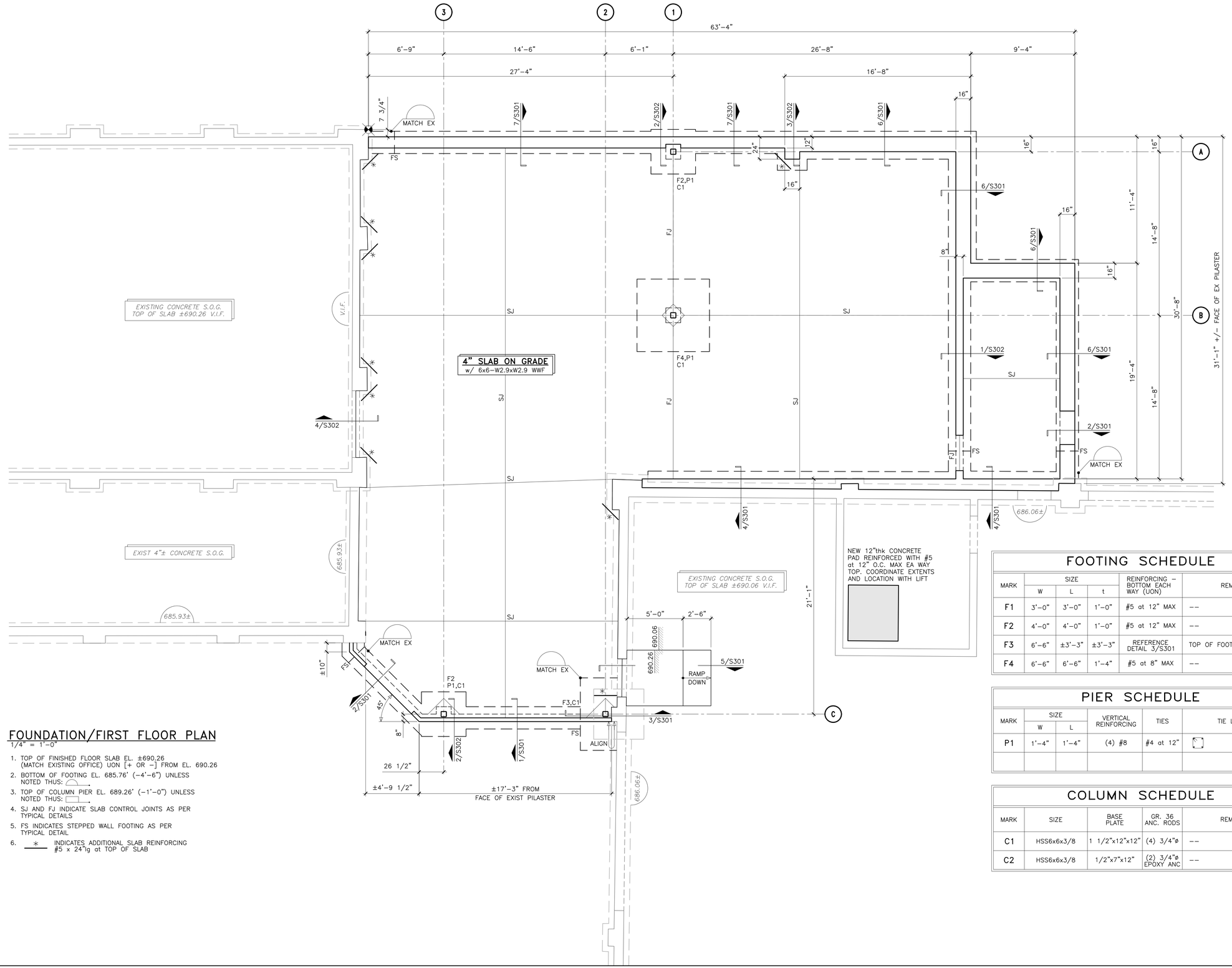

N

FOUNDATION/FIRST FLOOR PLAN

1/4" = 1'-0"

1. TOP OF FINISHED FLOOR SLAB EL. ±690.26 (MATCH EXISTING OFFICE) UON [+ OR -] FROM EL. 690.26
2. BOTTOM OF FOOTING EL. 685.76' (-4'-6") UNLESS NOTED THUS:
3. TOP OF COLUMN PIER EL. 689.26' (-1'-0") UNLESS NOTED THUS:
4. SJ AND FJ INDICATE SLAB CONTROL JOINTS AS PER TYPICAL DETAILS
5. FS INDICATES STEPPED WALL FOOTING AS PER TYPICAL DETAIL
6. * INDICATES ADDITIONAL SLAB REINFORCING #5 x 24"lg at TOP OF SLAB

FOOTING SCHEDULE

MARK	SIZE			REINFORCING - BOTTOM EACH WAY (UON)	REMARKS
	W	L	t		
F1	3'-0"	3'-0"	1'-0"	#5 at 12" MAX	--
F2	4'-0"	4'-0"	1'-0"	#5 at 12" MAX	--
F3	6'-6"	±3'-3"	±3'-3"	REFERENCE DETAIL 3/S301	TOP OF FOOTING EL. 689.26'
F4	6'-6"	6'-6"	1'-4"	#5 at 8" MAX	--

PIER SCHEDULE

MARK	SIZE		VERTICAL REINFORCING	TIES	TIE LAYOUT
	W	L			
P1	1'-4"	1'-4"	(4) #8	#4 at 12"	

COLUMN SCHEDULE

MARK	SIZE	BASE PLATE	GR. 36 ANC. RODS	REMARKS
C1	HSS6x6x3/8	1 1/2"x12"x12"	(4) 3/4"ø	--
C2	HSS6x6x3/8	1/2"x7"x12"	(2) 3/4"ø EPOXY ANC	--

COPYRIGHT© 2022 TREDO ENGINEERS
ALL RIGHTS RESERVED, NO PART OF THIS DRAWING MAY BE REPRODUCED OR COPIED IN ANY FORM BY ANY MEANS WITHOUT THE WRITTEN PERMISSION OF THE ENGINEER.

REPRODUCTION OF THIS DRAWING FOR USE IN THE PRODUCTION OF SHOP AND/OR FIELD DETAIL DRAWINGS IS EXPRESSLY FORBIDDEN.

UNAUTHORIZED ALTERATION AND/OR DUPLICATION OF THIS DRAWING IS A VIOLATION OF SECTION 7209, PROVISION 2, OF THE NEW YORK STATE EDUCATION LAW.

CJS ARCHITECTS
BUFFALO | ROCHESTER
www.cjsarchitects.com

tredo ENGINEERS
CIVIL | STRUCTURAL | ENGINEERING
755 Seneca St. #202
Buffalo, NY 14210
www.tredoengineers.com

KEY PLAN N

COLD SPRING CONSTRUCTION CO.

ADDITION & RENOVATION

43 JACKSON STREET
AKRON, NY 14001

REV. #	DESCRIPTION	DATE

JOB NO.	2103 (T.E. JOB #21-11)
SCALE	AS NOTED
ISSUE DATE	02.18.2022
DRAWN BY	MJN
CHECKED BY	MJE

THIS IS A SINGLE SHEET OF A COHESIVE SET OF CONSTRUCTION DOCUMENTS (INCLUDING DRAWINGS AND SPECIFICATIONS). INTERPRETATION OF THE INFORMATION AS PRESENTED SHOULD BE BASED ON THE ENTIRE SET OF DOCUMENTS.

DRAWING TITLE

FOUNDATION / FIRST FLOOR PLAN

S-101

PERMIT SET

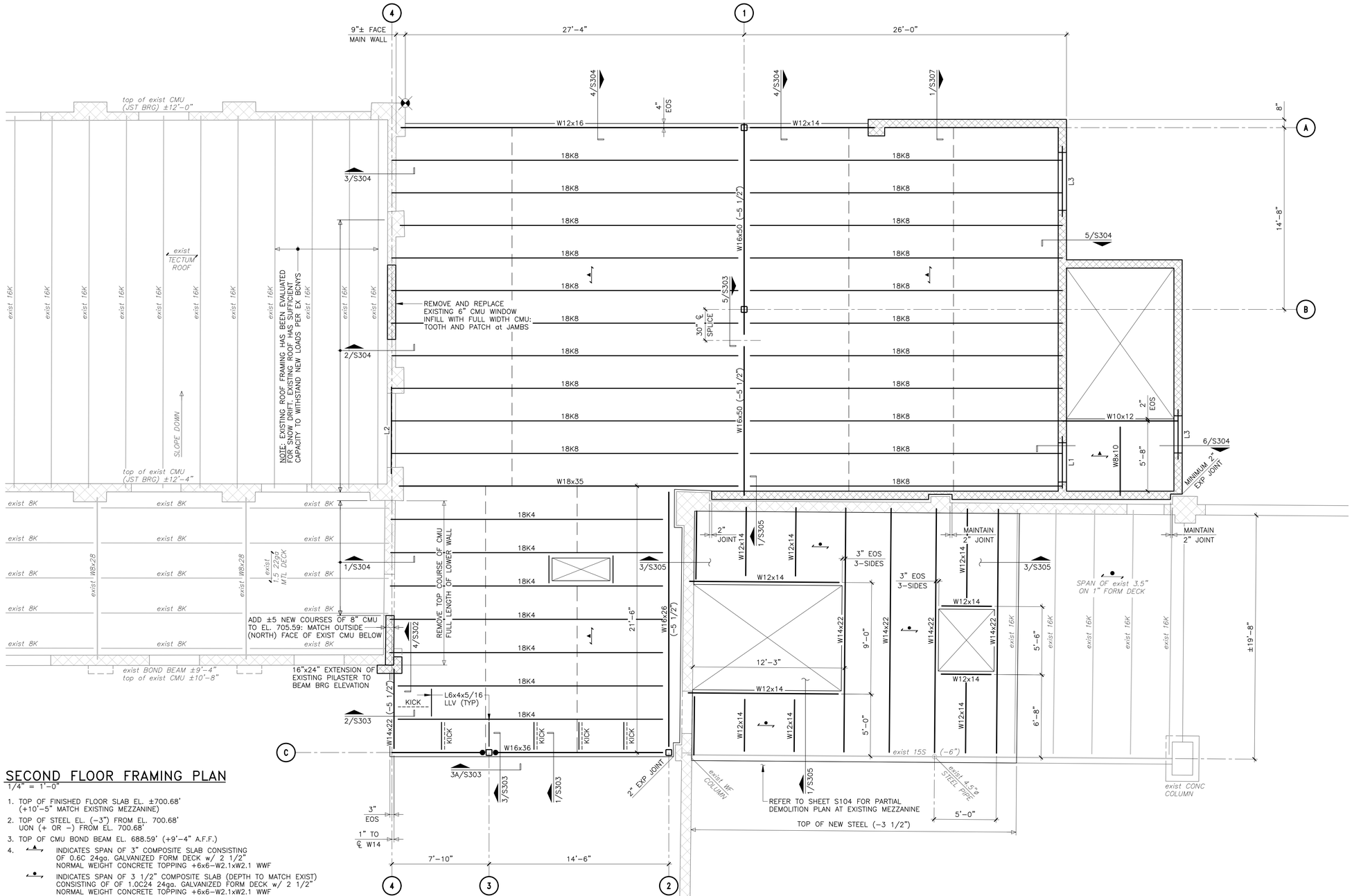

N

SECOND FLOOR FRAMING PLAN

1/4" = 1'-0"

1. TOP OF FINISHED FLOOR SLAB EL. ±700.68' (+10'-5" MATCH EXISTING MEZZANINE)
2. TOP OF STEEL EL. (-3") FROM EL. 700.68' UON (+ OR -) FROM EL. 700.68'
3. TOP OF CMU BOND BEAM EL. 688.59' (+9'-4" A.F.F.)
4. INDICATES SPAN OF 3" COMPOSITE SLAB CONSISTING OF 0.6C 24ga. GALVANIZED FORM DECK w/ 2 1/2" NORMAL WEIGHT CONCRETE TOPPING +6x6-W2.1xW2.1 WWF
   INDICATES SPAN OF 3 1/2" COMPOSITE SLAB (DEPTH TO MATCH EXIST) CONSISTING OF OF 1.0C24 24ga. GALVANIZED FORM DECK w/ 2 1/2" NORMAL WEIGHT CONCRETE TOPPING +6x6-W2.1xW2.1 WWF
5. INDICATES SOLID GROUTED 8" CMU WALL (UON) REINFORCED WITH #5 VERT FULL HEIGHT at 48" O.C. MAX CELLS (SEE S203 FOR ADDITIONAL REINFORCING)
6. L1 INDICATES LOAD BEARING CMU LINTEL REQUIRED PER SCHEDULE ON DRAWING S203
7. INDICATES FULL CAPACITY BEAM-to-COLUMN MOMENT CONNECTION PER SECTION 3A/S303
8. INDICATES L1x1x7/64 CONTINUOUS HORIZONTAL BRIDGING at TOP AND BOTTOM OF JOIST
9. KICK INDICATES L3x3x1/4 KICKER at 48" O.C. MAX
10. COORDINATE EXACT SIZE AND LOCATION OF ALL FLOOR OPENINGS WITH ARCHITECTURAL AND MECHANICAL DRAWINGS PRIOR TO PREPARING SHOP DRAWINGS

(30/4) 3/4"ø PUDDLE WELDS

METAL DECK FASTENING PATTERN

COPYRIGHT© 2022 TREDO ENGINEERS
ALL RIGHTS RESERVED. NO PART OF THIS DRAWING MAY BE REPRODUCED OR COPIED IN ANY FORM BY ANY MEANS WITHOUT THE WRITTEN PERMISSION OF THE ENGINEER.
REPRODUCTION OF THIS DRAWING FOR USE IN THE PRODUCTION OF SHOP AND/OR FIELD DETAIL DRAWINGS IS EXPRESSLY FORBIDDEN.
UNAUTHORIZED ALTERATION AND/OR DUPLICATION OF THIS DRAWING IS A VIOLATION OF SECTION 7209 PROVISION 2, OF THE NEW YORK STATE EDUCATION LAW.

CJS ARCHITECTS
BUFFALO | ROCHESTER
www.cjsarchitects.com

tredo ENGINEERS
CIVIL | STRUCTURAL | ENGINEERING
755 Seneca St. #202
Buffalo, NY 14210
www.tredoengineers.com

KEY PLAN N

COLD SPRING CONSTRUCTION CO.

ADDITION & RENOVATION

43 JACKSON STREET
AKRON, NY 14001

REV. #	DESCRIPTION	DATE

JOB NO.	2103 (T.E. JOB #21-11)
SCALE	AS NOTED
ISSUE DATE	02.18.2022
DRAWN BY	MJN
CHECKED BY	MJE

THIS IS A SINGLE SHEET OF A COHESIVE SET OF CONSTRUCTION DOCUMENTS (INCLUDING DRAWINGS AND SPECIFICATIONS). INTERPRETATION OF THE INFORMATION AS PRESENTED SHOULD BE BASED ON THE ENTIRE SET OF DOCUMENTS.

DRAWING TITLE

SECOND FLOOR FRAMING PLAN

S-102

PERMIT SET

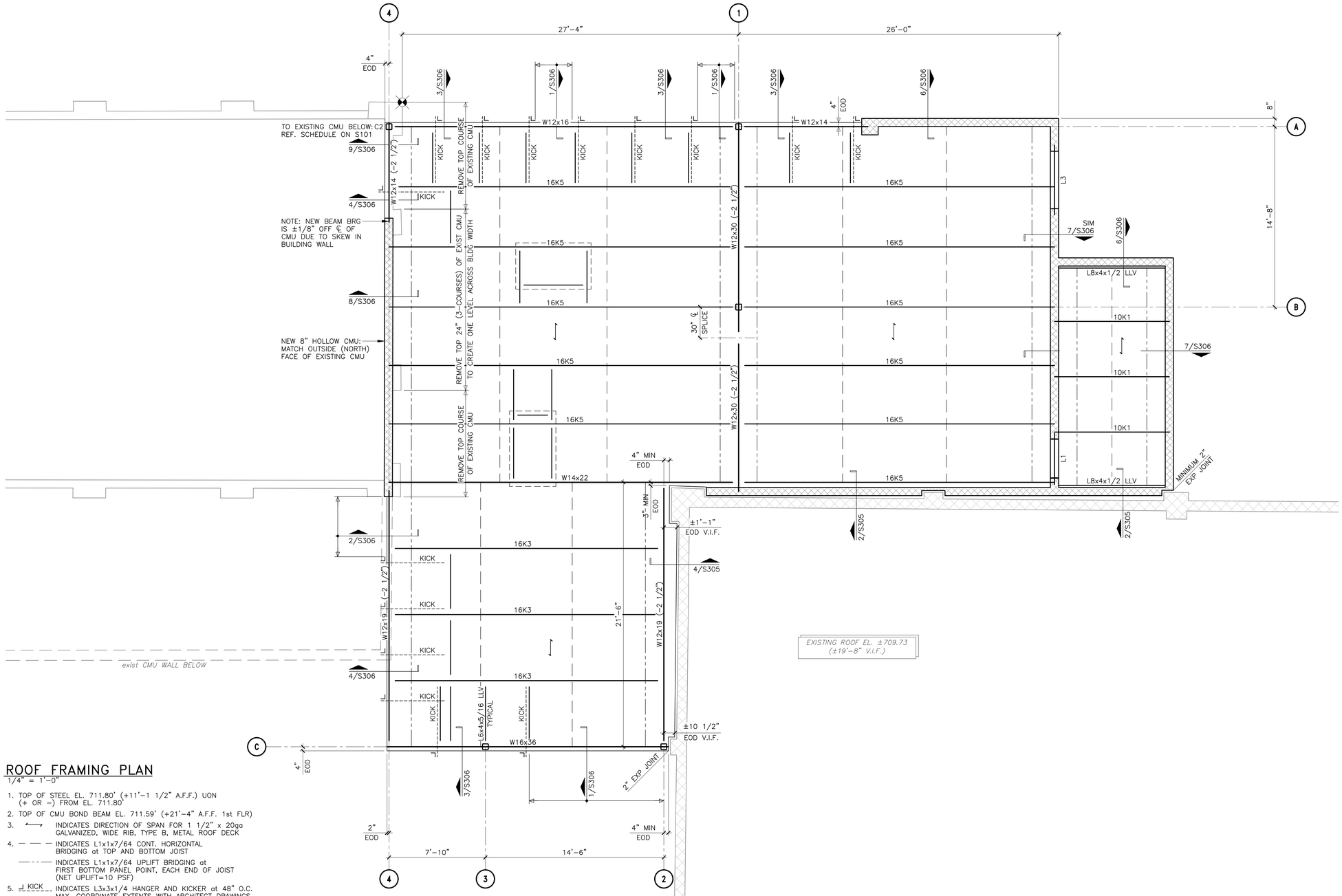

N

ROOF FRAMING PLAN

1/4" = 1'-0"

1. TOP OF STEEL EL. 711.80' (+11'-1 1/2" A.F.F.) UON (+ OR -) FROM EL. 711.80'
2. TOP OF CMU BOND BEAM EL. 711.59' (+21'-4" A.F.F. 1st FLR)
3. ⟷ INDICATES DIRECTION OF SPAN FOR 1 1/2" x 20ga GALVANIZED, WIDE RIB, TYPE B, METAL ROOF DECK
4. — — — INDICATES L1x1x7/64 CONT. HORIZONTAL BRIDGING at TOP AND BOTTOM JOIST
   — - - — INDICATES L1x1x7/64 UPLIFT BRIDGING at FIRST BOTTOM PANEL POINT, EACH END OF JOIST (NET UPLIFT=10 PSF)
5. ⌟ KICK ⌞ INDICATES L3x3x1/4 HANGER AND KICKER at 48" O.C. MAX. COORDINATE EXTENTS WITH ARCHITECT DRAWINGS
6. COORDINATE EXACT SIZE AND LOCATION OF ALL ROOF OPENINGS WITH ARCHITECTURAL AND MECHANICAL DRAWINGS PRIOR TO PREPARING SHOP DRAWINGS

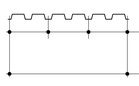

METAL DECK WELDING PATTERN

COPYRIGHT© 2022 TREDO ENGINEERS
ALL RIGHTS RESERVED. NO PART OF THIS DRAWING MAY BE REPRODUCED OR COPIED IN ANY FORM BY ANY MEANS WITHOUT THE WRITTEN PERMISSION OF THE ENGINEER.

REPRODUCTION OF THIS DRAWING FOR USE IN THE PRODUCTION OF SHOP AND/OR FIELD DETAIL DRAWINGS IS EXPRESSLY FORBIDDEN.

UNAUTHORIZED ALTERATION AND/OR DUPLICATION OF THIS DRAWING IS A VIOLATION OF SECTION 7209, PROVISION 2, OF THE NEW YORK STATE EDUCATION LAW.

CJS ARCHITECTS
BUFFALO | ROCHESTER
www.cjsarchitects.com

tredo ENGINEERS
CIVIL | STRUCTURAL | ENGINEERING
755 Seneca St. #202
Buffalo, NY 14210
www.tredoengineers.com

KEY PLAN

COLD SPRING CONSTRUCTION CO.

ADDITION & RENOVATION

43 JACKSON STREET
AKRON, NY 14001

REV. #	DESCRIPTION	DATE

JOB NO.	2103 (T.E. JOB #21-11)
SCALE	AS NOTED
ISSUE DATE	02.18.2022
DRAWN BY	MJN
CHECKED BY	MJE

THIS IS A SINGLE SHEET OF A COHESIVE SET OF CONSTRUCTION DOCUMENTS (INCLUDING DRAWINGS AND SPECIFICATIONS). INTERPRETATION OF THE INFORMATION AS PRESENTED SHOULD BE BASED ON THE ENTIRE SET OF DOCUMENTS.

DRAWING TITLE

ROOF FRAMING PLAN

S-103

PERMIT SET

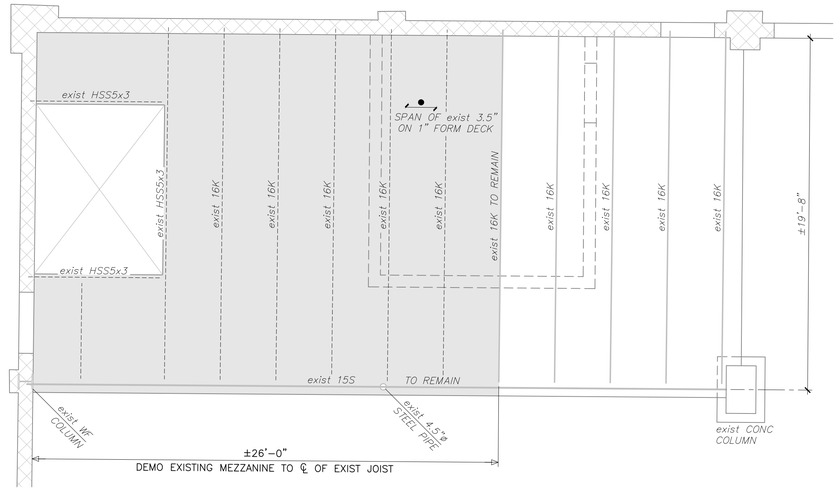

N

PARTIAL DEMOLITION at EXISTING MEZZANINE FRAMING PLAN

1/4" = 1'-0"

COPYRIGHT© 2022 TREDO ENGINEERS
ALL RIGHTS RESERVED. NO PART OF THIS DRAWING MAY BE REPRODUCED, OR COPIED IN ANY FORM BY ANY MEANS WITHOUT THE WRITTEN PERMISSION OF THE ENGINEER.

REPRODUCTION OF THIS DRAWING FOR USE IN THE PRODUCTION OF SHOP DRAWINGS, DETAILED, DRAWINGS IS EXPRESSLY FORBIDDEN.

UNAUTHORIZED ALTERATION AND/OR DUPLICATION OF THIS DRAWING IS A VIOLATION OF SECTION 7209, PROVISION 2, OF THE NEW YORK STATE EDUCATION LAW.

CJS ARCHITECTS
BUFFALO | ROCHESTER
www.cjsarchitects.com

tredo ENGINEERS
CIVIL | STRUCTURAL | ENGINEERING
755 Seneca St. #202
Buffalo, NY 14210
www.tredoengineers.com

KEY PLAN N

COLD SPRING CONSTRUCTION CO.

ADDITION & RENOVATION

43 JACKSON STREET
AKRON, NY 14001

REV. #	DESCRIPTION	DATE

JOB NO.	2103 (T.E. JOB #21-11)
SCALE	AS NOTED
ISSUE DATE	02.18.2022
DRAWN BY	MJN
CHECKED BY	MJE

THIS IS A SINGLE SHEET OF A COHESIVE SET OF CONSTRUCTION DOCUMENTS (INCLUDING DRAWINGS AND SPECIFICATIONS). INTERPRETATION OF THE INFORMATION AS PRESENTED SHOULD BE BASED ON THE ENTIRE SET OF DOCUMENTS.

DRAWING TITLE

PARTIAL DEMOLITION FRAMING PLAN

S-104

PERMIT SET

FOUNDATIONS

F1 IN GENERAL, EXTERIOR CONSTRUCTION SHALL BE CARRIED DOWN NOT LESS THAN FOUR FEET BELOW FINISHED EXTERIOR GRADE.

F2 ALL SOIL SUPPORTED FOOTINGS SHALL BEAR ON UNDISTURBED NATURAL SUBGRADE MATERIAL HAVING A MINIMUM NET ALLOWABLE BEARING CAPACITY OF 2.5 KIPS PER SQUARE FOOT (1 KIP=1000 LBS.), PER THE RECOMMENDATIONS OF THE GEOTECHNICAL INVESTIGATION AND REPORT PREPARED BY BARRON & ASSOC, P.C. DATED APRIL 22, 2021.

F3 NO FOOTINGS OR SLABS SHALL BE PLACED IN WATER OR ON FROZEN GROUND.

F4 ALL FOOTING EXCAVATIONS ARE TO BE FINISHED BY HAND. COMPACT FOOTING SUBGRADES TO A MINIMUM OF 95% MODIFIED PROCTOR DENSITY AT OPTIMUM MOISTURE CONTENT. PLACE FOOTING CONCRETE SAME DAY OF EXCAVATION OR PROTECT SUBGRADE BY IMMEDIATELY PLACING A 3-INCH LEAN CONCRETE MUD MAT.

F5 ALL FINISHED EXCAVATIONS AND BEARING GRADES SHALL BE INSPECTED AND APPROVED BY THE OWNER'S SOIL TESTING AGENCY BEFORE ANY CONCRETE IS PLACED.

F6 ALL STRUCTURAL FILL UNDER ANY PORTION OF THE BUILDING SHALL BE COMPACTED IN 8-INCH LIFTS. SEE SPECIFICATIONS FOR THE ACCEPTABLE GRADATIONS AND COMPACTION REQUIREMENTS.

F7 THE ARCHITECT/ENGINEER ASSUMES NO RESPONSIBILITY FOR THE VALIDITY OF THE SUBSURFACE CONDITIONS DESCRIBED ON THE DRAWINGS, TEST BORINGS OR TEST PITS. THESE DATA REPRESENT CONDITIONS ONLY AT THESE SPECIFIC LOCATIONS AT THE PARTICULAR TIME THEY WERE MADE.

F8 BACKFILL AGAINST FOUNDATION WALLS BELOW GRADE SO THAT THE DIFFERENCE IN FILL LEVEL ON OPPOSITE SIDES DOES NOT EXCEED 1'_0" AT ANY TIME.

F9 ALL FOUNDATION WALLS SHALL BE BRACED DURING THE OPERATION OF BACKFILLING AND COMPACTION. BRACING SHALL BE LEFT IN POSITION UNTIL PERMANENT RESTRAINTS ARE EFFECTIVE. BACKFILL NO FOUNDATION WALLS UNTIL PERMANENT LATERAL STRUCTURAL SUPPORT SYSTEM IS IN PLACE AND OF ADEQUATE STRENGTH TO WITHSTAND THE APPLIED LATERAL PRESSURES.

F10 NOTE REQUIREMENTS IN PLANS AND SPECIFICATIONS FOR UNDERPINNING AND PROTECTION OF ADJACENT STRUCTURES.

F11 LOCATE ALL EXISTING BELOW GRADE UTILITIES. PROVIDE UTILITIES WITH POSITIVE PROTECTION AGAINST DAMAGE DUE TO SETTLEMENT AND CONSTRUCTION OPERATIONS.

F12 USE SIDE FORMS FOR ALL FOOTINGS, PIERS AND WALLS.

F13 THE SUB-BASE FOR THE SLAB ON GRADE SHALL BE AS DETAILED.

F14 THE EXPOSED SUBGRADE SOILS MAY BE SENSITIVE TO DISTURBANCE AND STRENGTH DEGRADATION WHEN HIGH MOISTURE CONTENTS ARE PRESENT. MINIMIZE CONSTRUCTION TRAFFIC OVER EXPOSED SUBGRADES AND DO NOT ALLOW WATER TO POND ON THESE SUBGRADES. CONTROL SURFACE AND GROUND WATER BY PROPER SITE GRADING, SURFACE DRAINAGE CHANNELS, PERIMETER CUTOFF TRENCHES AND SUMP PUMP METHODS UNTIL GROUND FLOOR SLABS, PERIMETER WALLS AND WATERPROOFING ARE INSTALLED AND THE PERMANENT BUILDING DRAINAGE SYSTEM IS FULLY OPERATIONAL.

F15 RETAIN THE PERIMETER OF THE GENERAL EXCAVATION WHERE NECESSARY AND AS RECOMMENDED BY THE OWNER'S SOILS TESTING AGENCY. THE DESIGN, INSTALLATION, MAINTENANCE AND REMOVAL ARE THE COMPLETE AND SOLE RESPONSIBILITY OF THE CONTRACTOR. PROVIDE ALL MEASURES AND PRECAUTIONS NECESSARY TO PREVENT AND MINIMIZE SETTLEMENT OF EXISTING OR NEW CONSTRUCTION INSIDE OR OUTSIDE THE PROJECT LIMITS.

F16 SEE SPECIFICATION SECTION 312000 -EARTHWORK FOR ADDITIONAL REQUIREMENTS.

CONCRETE

C1 ALL CONCRETE SHALL BE CONTROLLED CONCRETE.

C2 A QUALITY CONTROL PROGRAM OF FIELD TESTING AND INSPECTION SHALL BE PERFORMED ON ALL STRUCTURAL CONCRETE WORK IN ACCORDANCE WITH THE SPECIFICATIONS.

C3 CONCRETE SHALL HAVE THE FOLLOWING MINIMUM COMPRESSIVE STRENGTH AT 28-DAYS:

A.	FOUNDATION WALLS, PIERS AND FOOTINGS	4000 PSI
B.	SLABS ON GRADE	3500 PSI
C.	CONCRETE IN SLABS ON METAL DECK	3500 PSI
D.	ALL OTHER CONCRETE	3000 PSI

C4 ALL CONCRETE SHALL BE NORMAL WEIGHT CONCRETE WITH A NOMINAL AIR DRY DENSITY OF 145 PCF.

C5 FOR AIR ENTRAINMENT AND OTHER CONCRETE CHARACTERISTICS - SEE SPECIFICATIONS.

C6 PROVIDE CONSTRUCTION JOINTS WHERE SHOWN. OMIT NONE AND ADD NONE WITHOUT WRITTEN APPROVAL FROM THE ARCHITECT/ENGINEER. SUBMIT DRAWINGS SHOWING ALL PROPOSED CONSTRUCTION JOINT LOCATIONS FOR APPROVAL PRIOR TO PREPARATION OF AFFECTED REINFORCEMENT SHOP DRAWINGS.

C7 SIZES OF CONCRETE PLACEMENTS SHALL NOT EXCEED THE FOLLOWING:

A. WALLS - SECTION 60-FEET MAXIMUM LENGTH.

B. SLABS ON GRADE - PLACE IN ACCORDANCE WITH JOINT PATTERNS INDICATED ON PLAN. PLACE IN LINEAR STRIPS NOT TO EXCEED 30 FT. PLACEMENTS AREA SHALL NOT EXCEED "FORMED JOINTS" AS INDICATED ON PLAN WITHOUT PRIOR ACCEPTANCE BY THE ARCHITECT/ENGINEER. BEGIN SAWCUTTING OF THE SLAB AS SOON AS THE SAW DOES NOT CAUSE THE SURFACE TO BE TORN OR DAMAGED, BUT IN NO CASE MORE THAN 12 HOURS AFTER SLAB FINISHING OPERATIONS.

C8 MINIMUM ELAPSED TIME BETWEEN ADJACENT CONCRETE PLACEMENTS SHALL BE 48 HOURS.

C9 CONCRETE SLABS, INCLUDING SLABS ON METAL DECK, SHALL BE CAST SO THAT THE SLAB THICKNESS IS AT NO POINT LESS THAN THAT INDICATED ON THE DRAWINGS. THIS WILL REQUIRE THAT SLAB NOT BE CAST LEVEL WHERE BEAMS, GIRDERS OR TRUSSES HAVE AN UPWARD CAMBER.

C10 CONCRETE MIX DESIGN FOR EACH TYPE AND STRENGTH OF CONCRETE SPECIFIED SHALL BE SUBMITTED FOR ARCHITECT/ENGINEER REVIEW 30-DAYS PRIOR TO PLACEMENT OF CONCRETE.

C11 WIRE BRUSH CLEAN AND MOISTEN ALL CONSTRUCTION JOINTS IMMEDIATELY PRIOR TO PLACING NEW CONCRETE.

C12 NO CALCIUM CHLORIDE SHALL BE USED IN ANY CONCRETE.

C13 REFER TO ACI 305 FOR HOT WEATHER CONCRETE REQUIREMENTS AND ACI 306 FOR COLD WEATHER CONCRETE REQUIREMENTS.

C14 SEE SPECIFICATION SECTION 033000 - CAST IN PLACE CONCRETE FOR CONCRETE MIX CRITERIA AND ADDITIONAL REQUIREMENTS.

REINFORCING

R1 ALL BAR REINFORCEMENT SHALL CONFORM TO ASTM 615, GRADE 60.

R2 WELDED WIRE FABRIC REINFORCEMENT SHALL CONFORM TO ASTM A185.

R3 CLEARANCE OF MAIN REINFORCEMENT FROM ADJACENT SURFACES SHALL CONFORM TO THE FOLLOWING (UNLESS OTHERWISE SHOWN IN DETAIL):

A.	UNFORMED SURFACES IN CONTACT WITH GROUND (FOOTING OR WALL BOTTOM)	3 INCHES
B.	SLABS ON GRADE	2 1/2 INCHES
C.	FORMED SURFACES IN CONTACT WITH GROUND OR EXPOSED TO WEATHER (WALLS, PIERS)	2 INCHES
D.	IN ALL CASES, CLEARANCE NOT LESS THAN DIAMETER OF BARS.	

NOTE: MAXIMUM DEVIATION FROM THESE REQUIREMENTS SHALL BE +1/4" FOR SECTIONS TEN (10) INCHES OR LESS AND +1/2" FOR SECTIONS OVER TEN (10) INCHES THICK.

R4 REINFORCEMENT SHALL BE CONTINUOUS THROUGH ALL CONSTRUCTION JOINTS UNLESS OTHERWISE INDICATED ON DRAWINGS.

R5 WHERE REINFORCING IS NOT SHOWN ON THE DRAWINGS, PROVIDE REINFORCEMENT IN ACCORDANCE WITH APPLICABLE TYPICAL DETAILS OR SIMILAR TO THAT SHOWN FOR MOST NEARLY SIMILAR SITUATIONS, AS DETERMINED BY THE ARCHITECT/ENGINEER. IN NO CASE SHALL REINFORCEMENT BE LESS THAN MINIMUM PERMITTED BY THE APPLICABLE CODES.

R6 ALL WORKMANSHIP AND MATERIAL SHALL CONFORM TO THE "MANUAL OF STANDARD PRACTICE FOR DETAILING REINFORCED CONCRETE STRUCTURES" (ACI-315), AND BUILDING CODE REQUIREMENTS FOR REINFORCED CONCRETE (ACI-318).

R7 ALL REINFORCING SHALL BE INSPECTED AND APPROVED BY THE ARCHITECT/ENGINEER OR OWNER'S TESTING AGENCY BEFORE CONCRETE IS PLACED.

R8 WHERE CONTINUOUS BARS ARE CALLED FOR, THEY SHALL BE RUN CONTINUOUSLY AROUND CORNERS, LAPPED AT NECESSARY SPLICES AND HOOKED AT DISCONTINUOUS ENDS.

R9 WELDED WIRE FABRIC SHALL BE LAPPED ONE FULL MESH PANEL OR 6" MINIMUM.

R10 ALL REINFORCING SPLICES SHALL CONFORM TO THE TABLE(S) PROVIDED IN THE GENERAL NOTES FOR EACH STRENGTH OF CONCRETE BUT IN NO CASE LESS THAN THE REQUIREMENTS OF THE LATEST EDITION OF ACI-318.

R11 SLABS AND WALLS SHALL NOT BE SLEEVED OR BOXED OUT OR HAVE THEIR REINFORCING INTERRUPTED EXCEPT AS SPECIFICALLY NOTED ON THE DRAWINGS. PROVIDE ADDITIONAL REINFORCEMENT AROUND OPENINGS AS SHOWN IN THE DETAILS.

R12 SUBMIT CHECKED SHOP DRAWINGS TO THE ARCHITECT/ENGINEER FOR REVIEW PRIOR TO FABRICATION OF REINFORCING. DRAWINGS SHALL SHOW REINFORCING DETAILS, INCLUDING SIZE AND SPACING OF BARS AND SUPPORT DETAILS. SHOP DRAWINGS SHALL INDICATE CONSTRUCTION JOINTS, CURBS, DEPRESSIONS, SLEEVES, AND OPENINGS, ETC... WITH ALL ADDITIONAL REINFORCING REQUIRED.

R13 BAR SUPPORTS SHALL BE GALVANIZED OR STAINLESS STEEL. IN ADDITION, BAR SUPPORTS IN CONTACT WITH EXPOSED SURFACES SHALL BE PLASTIC TIPPED.

PIER REINFORCING LAP SPLICE LENGTHS

LAP SPLICE LENGTHS FOR REINFORCING IN 4000 PSI CONCRETE ARE AS FOLLOWS:

BAR SIZE	TENSION SPLICE	COMPRESSION SPLICE	COMP. DEVELOPMENT LENGTH
3	15	12	12
4	20	15	12
5	26	19	15
6	31	23	18
7	39	26	23
8	51	30	30
9	65	34	38
10	82	38	48
11	101	42	59

NOTES:

1. LAPPED SPLICE LENGTHS BASED ON ASTM A-615, GRADE 60, REBAR.
2. LAP SPLICES, WHETHER TENSION OR COMPRESSION, SHALL BEGIN IMMEDIATELY ABOVE THE FINISHED FLOOR, TOP OF PIER, OR TOP OF FOOTING. LAP SPLICES SHALL BE SIDE LAPPED TO PROVIDE MAXIMUM MOMENT CAPACITY. INSIDE TO OUTSIDE LAPS ARE NOT PERMITTED.
3. TIED COMPRESSION MEMBERS REQUIRED.
4. ALL SPLICE LENGTHS NOTED IN INCHES.

SLAB AND WALL REINFORCING LAP SPLICE LENGTHS

LAP SPLICE LENGTHS FOR REINFORCING IN 3500 PSI PLUS CONCRETE ARE AS FOLLOWS:

BAR SIZE	TENSION SPLICE TOP	TENSION SPLICE OTHER	DEVELOPMENT LENGTH
3	21	15	13
4	29	20	17
5	36	26	21
6	43	31	25
7	54	39	32
8	71	51	42
9	90	65	53
10	115	82	68
11	163	101	83

NOTES:

1. LAPPED SPLICE LENGTHS BASED ON ASTM A-615, GRADE 60, REBAR.
2. REINFORCING BARS ARE CLASSED AS TOP BARS WHEN MORE THAN 12" OF CONCRETE IS CAST BENEATH RESPECTIVE REINFORCING BAR.
3. COMPRESSION SPLICES PERMISSIBLE ONLY WHERE SPECIFICALLY NOTED ON THE DRAWINGS, DETAILS OR SCHEDULES.
4. TENSION SPLICES SHALL BE USED IN ALL BEAMS, SLABS AND WALLS UNLESS OTHERWISE NOTED.
5. WHEN LAPPING LARGER BAR WITH SMALLER BAR, LAP LENGTH FOR SMALLER BAR SHALL GOVERN RESPECTIVE SPLICE.
6. SPLICE CONTINUOUS TOP REINFORCING BARS AT CENTER OF CLEAR SPAN WITH COMPRESSION SPLICES.
7. SPLICE CONTINUOUS BOTTOM REINFORCING BARS AT CENTER OF SUPPORTING ELEMENT WITH COMPRESSION SPLICES.
8. ALL SPLICE LENGTHS NOTED IN INCHES.

STRUCTURAL STEEL

S1 A QUALITY CONTROL PROGRAM OF SHOP AND FIELD TESTING AND INSPECTION WILL BE PERFORMED ON ALL STRUCTURAL STEEL FABRICATION, ERECTION AND CONNECTIONS IN ACCORDANCE WITH THE SPECIFICATIONS.

S2 DETAIL, FABRICATE AND ERECT STRUCTURAL STEEL IN CONFORMANCE WITH THE AISC SPECIFICATIONS AND CODES, LATEST EDITIONS.

S3 PERFORM ALL WELDING USING QUALIFIED WELDERS AND IN ACCORDANCE WITH THE AWS "STRUCTURAL WELDING CODE - STEEL", LATEST EDITION. COMPLY WITH AISC SPECIFICATION SECTION J2.2 FOR MINIMUM FILLET WELD SIZE, BUT DO NOT USE LESS THAN 1/4 INCH UNLESS SPECIFICALLY NOTED ON THE DRAWINGS.

S4 SUBMIT CHECKED SHOP DRAWINGS TO THE ARCHITECT/ENGINEER FOR REVIEW. SHOW SHOP FABRICATION DETAILS, FIELD ASSEMBLY DETAILS AND ERECTION DIAGRAMS FOR ALL STRUCTURAL STEEL.

S5 IN GENERAL, DESIGN ALL BEAM-TO-BEAM AND BEAM-TO-COLUMN CONNECTIONS AS SIMPLE SHEAR CONNECTIONS CAPABLE OF END ROTATION AS PER AISC SPECIFICATION SECTION J1.2 - UNRESTRAINED MEMBERS. PROVIDE HIGH-STRENGTH BOLTS IN BEARING TYPE CONNECTIONS WITH THE THREADS INCLUDED IN THE SHEAR PLANE. DESIGN ALL CONNECTIONS FOR THE MINIMUM SHEAR CAPACITIES AS SHOWN. IF SPECIFIC LOAD CRITERIA IS NOT GIVEN, BEAMS SHALL BE DESIGNED FOR AN END REACTION AS TABULATED IN THE AISC HANDBOOK, LATEST EDITION, PART 2.

S6 PROVIDE 3/4" MINIMUM DIAMETER HIGH STRENGTH BOLTS WHICH CONFORM TO THE REQUIREMENTS OF ASTM A325 OR A490 FOR ALL BOLTED CONNECTIONS.

S7 ALL STRUCTURAL STEEL SHALL BE NEW STEEL WHICH CONFORMS TO ASTM WITH THE FOLLOWING MINIMUM FOR YIELD STRESS (FY):

A.	WIDE-FLANGE SHAPES	50-65 KSI, ASTM A992
B.	TUBULAR SHAPES	46 KSI, ASTM A500, GRADE B
C.	ANGLES, PLATES & C SHAPES	36 KSI, ASTM A36

S8 ALL OPEN WEB STEEL JOISTS SHALL CONFORM TO SJI/AISC SPECIFICATIONS, LATEST EDITIONS.

S9 PROVIDE SUITABLE BEARING PLATES AND ANCHOR BOLTS FOR WALL BEARING JOISTS, BEAMS AND GIRDERS.

S10 ANCHOR BOLTS, BASE PLATES AND BEARING PLATES SHALL BE LOCATED AND BUILT INTO CONNECTING WORK, PRE-SET BY TEMPLATES OR SIMILAR METHODS. ALL PLATES SHALL BE SET IN FULL BEDS OF NON-SHRINK GROUT. ALL POCKETS FOR COLUMNS AND BEAMS MUST BE COMPLETELY FILLED BEFORE A SLAB IS PLACED ABOVE.

S11 TEMPORARY ERECTION BRACING SHALL BE PROVIDED AS REQUIRED FOR THE SAFETY, STABILITY AND ALIGNMENT OF THE STRUCTURE. IT SHALL NOT BE REMOVED UNTIL PERMANENT BRACING HAS BEEN INSTALLED. THE BUILDING SHALL BE TRUE AND PLUMB BEFORE CONNECTIONS MAY BE FINALLY BOLTED OR WELDED.

S12 CONNECTIONS TO THE EXISTING STRUCTURE SHALL BE AS DETAILED ON THE DRAWINGS OR AS APPROVED BY THE ARCHITECT/ENGINEER. CONTRACTOR TO MAKE ALL NECESSARY MEASUREMENTS AND TO COORDINATE DETAILS WITH THE EXISTING CONNECTIONS, PRIOR TO PREPARATION OF SHOP DRAWINGS.

S13 DO NOT FIELD CUT ANY STRUCTURAL STEEL WITHOUT THE REVIEW AND ACCEPTANCE OF THE ARCHITECT/ENGINEER.

S14 SEE SPECIFICATION SECTION 051200 - STRUCTURAL STEEL AND 052100 - METAL JOISTS FOR ADDITIONAL REQUIREMENTS.

METAL DECK

MD1 PROVIDE METAL DECKING OF THE TYPES AND GAGES INDICATED ON THE DRAWINGS.

MD2 FABRICATE METAL DECKING FROM STEEL WHICH CONFORMS TO ASTM A446, GRADE A, HAVING A MINIMUM YIELD STRENGTH OF 33,000 PSI. HOT DIP GALVANIZE ROOF DECK TO G90 REQUIREMENTS AND ALL OTHER METAL DECK TO G60 REQUIREMENTS.

MD3 SUBMIT CHECKED SHOP DRAWINGS TO THE ARCHITECT/ENGINEER FOR REVIEW INDICATING LOCATION, GAGE AND SIZE OF EACH PIECE OF DECKING. SHOW WELDING DETAILS TO STRUCTURAL FRAMING, SIDE LAP CONNECTION DETAILS, LOCATION OF SHORING AND SUPPLEMENTARY SUPPORT STEEL AS REQUIRED.

MD4 PROVIDE CONTINUOUS SHEET METAL CLOSURES AT ALL SLAB OPENINGS AND SLAB EDGES AND CONTINUOUS DECK CLOSURES AT ALL DECK ENDS. PROVIDE SUPPLEMENTARY FRAMING AT OPENINGS AS REQUIRED FOR SUPPORT OF METAL DECK. PROVIDE STRAP ANCHORS AS NECESSARY TO CONTROL CANTILEVER DEFLECTIONS AT FLOOR SLAB EDGES.

MD5 PLACE METAL DECK OVER A MINIMUM OF THREE (3) SPANS IN THE DIRECTION INDICATED; USE DOUBLE SPANS ONLY WHERE REQUIRED BY FRAMING GEOMETRY AND IDENTIFY LOCATIONS ON METAL DECK SHOP DRAWINGS. SINGLE SPANS NOT PERMITTED.

MD6 FASTEN METAL DECK AS DETAILED. (FASTEN METAL DECK TO SUPPORTING STEEL LESS THAN 1/4" THICK USING #12 SELF-DRILLING FASTENERS AT SPACING ADEQUATE TO PROVIDE DIAPHRAGM STRENGTH EQUAL TO 3/4" PUDDLE WELDS.)

MD7 DO NOT HANG LOADS EXCEEDING 50 LBS. FROM ANY METAL DECKING. HANG ALL DUCTWORK, PIPING, ETC... DIRECTLY FROM STRUCTURAL STEEL WORK OR SUPPLEMENTARY MEMBERS OR ANCHORS EMBEDDED IN THE CONCRETE. SUBMIT ALL HANGING LOAD DETAILS FOR REVIEW.

MD8 SEE SPECIFICATION SECTION 053000 - STEEL DECKING FOR ADDITIONAL REQUIREMENTS.

CONCRETE MASONRY UNITS

CM1 CONCRETE MASONRY UNITS SHALL HAVE THE FOLLOWING MINIMUM STRENGTHS:

A. BEARING WALLS AND SHEAR WALLS:

1.	MIN. COMPRESSIVE STRENGTH ON NET AREA	1900 PSI
2.	MIN. F'M OF PRISM	1500 PSI

CM2 CONCRETE MASONRY UNITS ARE DESIGNED AS "INSPECTED MASONRY." A QUALITY CONTROL PROGRAM OF FIELD TESTING AND INSPECTION SHALL BE PERFORMED ON ALL CONCRETE MASONRY WORK IN ACCORDANCE WITH THE SPECIFICATIONS AND ACI 530, "BUILDING CODE REQUIREMENTS FOR MASONRY STRUCTURES."

CM3 ALL WORK SHALL CONFORM TO THE LATEST EDITION OF THE "BUILDING CODE REQUIREMENTS FOR CONCRETE MASONRY STRUCTURES" (ACI 530) AND SPECIFICATIONS (ACI 530.1).

CM4 TEMPORARY SHORING SHALL BE PROVIDED TO SUPPORT ALL SLABS AND PORTIONS OF WALLS REMAINING ABOVE NEW OPENINGS UNTIL PERMANENT SUPPORT SYSTEMS ARE INSTALLED AND HAVE REACHED 28-DAY STRENGTH.

CM5 INTERFACING NEW MASONRY WITH EXISTING MASONRY SHALL BE AS DETAILED ON THE DRAWINGS OR AS APPROVED BY THE ARCHITECT. CONTRACTOR IS TO MAKE ALL NECESSARY MEASUREMENTS AND TO COORDINATE DETAILS WITH THE EXISTING CONDITIONS.

CM6 PROVIDE MORTAR, TYPE M OR S, AND GROUT FOR REINFORCED LOAD BEARING MASONRY IN ACCORDANCE WITH ASTM C476 WITH A MINIMUM 28-DAY COMPRESSIVE STRENGTH EQUAL TO 3000 PSI.

CM7 USE FLUID GROUT, NOT MASONRY MORTAR, FOR FILLING VERTICAL WALL CELLS AND HORIZONTAL BOND BEAMS. PLACE GROUT USING EITHER THE LOW LIFT OR HIGH LIFT GROUTING METHOD IN MAXIMUM 4'-0" LIFTS.

CM8 PROVIDE REINFORCING BARS CONFORMING TO ASTM A615, GRADE 60.

CM9 SUBMIT CHECKED SHOP DRAWINGS TO THE ARCHITECT/ENGINEER FOR REVIEW INDICATING REINFORCING SIZE, GRADE, SPACING AND SUPPORT DETAILS.

CM10 GROUT SOLID ALL VERTICAL AND HORIZONTAL CELLS CONTAINING REINFORCING BARS AND /OR ANCHOR BOLTS. CONSOLIDATE GROUT IN PLACE BY VIBRATION TO INSURE COMPLETE FILLING OF CELLS.

CM11 PROVIDE HORIZONTAL JOINT REINFORCING, WALL TIES AND STRAP ANCHORS OF THE TYPES, SIZES AND GAGES INDICATED ON THE DRAWINGS.

CM12 PROVIDE ADEQUATE TEMPORARY BRACING DURING CONSTRUCTION FOR ALL MASONRY WALLS AS REQUIRED TO WITHSTAND ALL LATERAL LOADS AND THE PRESSURES OF FLUID GROUT. TEMPORARY BRACING SHALL REMAIN IN PLACE UNTIL PERMANENT SUPPORT SYSTEMS ARE INSTALLED AND HAVE BECOME FULLY EFFECTIVE.

CM13 PROVIDE CONTROL AND EXPANSION JOINTS WHERE SHOWN. OMIT NONE AND ADD NONE WITHOUT THE WRITTEN APPROVAL FROM THE ARCHITECT/ ENGINEER.

CM14 DO NOT USE MORTAR OR GROUT WHICH CONTAINS CALCIUM CHLORIDE OR AUTOMOTIVE ANTI-FREEZE.

CM15 REFER TO SPECIFICATION SECTION 042100 - STRUCTURAL UNIT MASONRY FOR ADDITIONAL REQUIREMENTS.

MISCELLANEOUS

M1 CONTRACTOR SHALL VERIFY ALL DIMENSIONS ON THE JOB. VERIFICATION OF EXISTING DIMENSIONS AND CONDITIONS SHALL BE DONE PRIOR TO PREPARATION OF SHOP DRAWINGS.

M2 ALL OPENINGS THROUGH SLABS AND WALLS ARE NOT SHOWN. PROVIDE UNIT PRICES FOR ADDITIONAL FRAMING AND REINFORCING.

M3 CONSULT THE ARCHITECTURAL, MECHANICAL AND ELECTRICAL DRAWINGS FOR LOCATIONS AND DIMENSIONS OF CHASES, INSERTS, OPENINGS, SLEEVES, WASHES, DRIPS, REVEALS, DEPRESSIONS AND OTHER PROJECT REQUIREMENTS.

M4 ALL WORK SHALL CONFORM TO THE LATEST EDITIONS OF THE BUILDING CODE OF NEW YORK STATE, THE AISC CODE, THE ACI BUILDING CODE (ACI 318, ACI 530), THE AMERICAN WELDING SOCIETY CODE AND ALL OTHER APPLICABLE ASTM STANDARDS. IN CASES OF CONFLICT, THE MOST STRINGENT SHALL GOVERN.

M5 TYPICAL DETAILS APPLY TO ALL DRAWINGS AND SHALL BE USED EXCEPT WHERE OTHERWISE SHOWN OR NOTED.

EXISTING BUILDING CODE REVIEW
IEBC SECTION 1103: ADDITIONS, STRUCTURAL

SECTION 1103.1 - COMPLIANCE WITH THE INTERNATIONAL BUILDING CODE
ALL NEW ELEMENTS COMPLY WITH BCNYS

SECTION 1103.2 - ADDITIONAL GRAVITY LOADS
EXISTING STRUCTURAL ELEMENTS SUPPORTING ANY ADDITIONAL GRAVITY LOADS AS A RESULT OF ADDITIONS SHALL COMPLY WITH BCNYS

ADDITIONS HAVE INCREASED GRAVITY LOADS ON EXISTING NORTH BEARING WALL HOWEVER, IT CAN BE SHOWN TO HAVE SUFFICIENT AXIAL CAPACITY. EXISTING FOUNDATION LOADS ARE BEING INCREASED, HOWEVER, EXISTING WALL WAS NON-LOAD BEARING AND THE TOTAL LOAD APPLIED WILL NOT BE IN EXCESS OF THE ALLOWABLE BEARING CAPACITY PROVIDED BY THE GEOTECHNICAL REPORT. EXISTING ROOF FRAMING HAS NEW SNOW DRIFT FROM NEW ADDITION. THE LOWER FRONT OFFICE ADDITION FROM 1993 APPEARS TO HAVE BEEN DESIGNED FOR SNOW DRIFT FROM THE HIGHER EXISTING BUILDING. BOTH THE 1993 LOW ROOF AND THE HIGHER EXIASTING ROOF CAN BE SHOWN TO HAVE SUFFICIETN RESIDUAL CAPACITY FOR THE NEW DRIFT CONDITIONS; NEITHER ROOF REQUIRES REINFORCING TO MEET CURRENT CODE.

SECTION 1103.3 - LATERAL FORCE RESISTING SYSTEM
WHERE HORIZONTAL ADDITIONS ARE STRUCTURALLY CONNECTED TO AN EXISTING STRUCTURE, ALL LFRS ELEMENTS OF THE EXISTING STRUCTURE AFFECTED BY THE ADDITION SHALL COMPLY WITH BCNYS FOR WIND AND 100% SEISMIC UNLESS THE DEMAND-CAPCITY RATIO IS NOT INCREASED BY MORE THAN 10%. THE BUILDING IS NOT BEING VOLUNTARILY REINFORCED PER 807.6.

EVALUATION AND ANALYSIS:

THE ADDITION IS DESIGNED TO BE LATERALLY SELF-SUPPORTING IN THE NORTH-SOUTH DIRECTION THROUGH THE NEW MASNORY STAIR HALL, BUT IT IS DEPENDENT ON THE EXISTING NORTH MASONRY WALL FOR LOADS IN THE EAST-WEST DIRECTION. THE BASE SHEAR INCREASE IN THE NORTH WALL IS ESTIMATED TO BE 100%, HOWEVER THE SHEAR STRESS APPLIED IS LESS THAN 2-PSI TOTAL. THE OVERTURNING ON THE NORTH WALL IS RESISTED BY THE WEIGHT OF THE NEW ADDITION WITH A FACTOR OF SAFETY EXCEEDING 2.0.

IT CAN BE SHOWN THAT THE EXISTING MASONRY WALLS IN THE EAST-WEST DIRECTION HAVE SIGNIFICANT RESIDUAL CAPACITY TO ACCEPT THE NET INCREASE IN BASE SHEAR.

SECTION 1103.4 - SNOW DRIFT LOADS
EXISTING STRUCTURAL ELEMENTS SUBJECTED TO ADDITIONAL LOADS FROM THE EFFECTS OF SNOW DRIFT AS A RESULT OF AN ADDITION SHALL COMPLY WITH BCNYS

REFERENCE EXPLAINATION ABOVE.

EXISTING WAREHOUSE DOES NOT HAVE ANY NEW SNOW LOADS DUE TO ADDITION.

COPYRIGHT© 2022 TREDO ENGINEERS
ALL RIGHTS RESERVED. NO PART OF THIS DRAWING MAY BE REPRODUCED OR COPIED IN ANY FORM BY ANY MEANS WITHOUT THE WRITTEN PERMISSION OF THE ENGINEER.

REPRODUCTION OF THIS DRAWING FOR USE IN THE PRODUCTION OF SHOP AND/OR FIELD DETAIL DRAWINGS IS EXPRESSLY FORBIDDEN.

UNAUTHORIZED ALTERATION AND/OR DUPLICATION OF THIS DRAWING IS A VIOLATION OF SECTION 7209, PROVISION 2, OF THE NEW YORK STATE EDUCATION LAW.

CJS ARCHITECTS
BUFFALO | ROCHESTER
www.cjsarchitects.com

tredo ENGINEERS
CIVIL | STRUCTURAL | ENGINEERING
755 Seneca St. #202
Buffalo, NY 14210
www.tredoengineers.com

KEY PLAN N

COLD SPRING CONSTRUCTION CO.

ADDITION & RENOVATION

43 JACKSON STREET
AKRON, NY 14001

REV. #	DESCRIPTION	DATE

JOB NO.	2103 (T.E. JOB #21-11)
SCALE	--
ISSUE DATE	02.18.2022
DRAWN BY	MJN
CHECKED BY	MJE

THIS IS A SINGLE SHEET OF A COHESIVE SET OF CONSTRUCTION DOCUMENTS (INCLUDING DRAWINGS AND SPECIFICATIONS). INTERPRETATION OF THE INFORMATION AS PRESENTED SHOULD BE BASED ON THE ENTIRE SET OF DOCUMENTS.

DRAWING TITLE

GENERAL NOTES

S-201a

PERMIT SET

DESIGN LOADS

OFFICE AREAS	50 PSF
COMMONS AREAS, STAIRS, LOBBIES	100 PSF
PARTITION ALLOWANCE	15 PSF
CLASSROOM, TRAINING ROOM (FIXED SEATING)	60 PSF
LIBRARY AREA (READING ROOM)	60 PSF
CEILINGS	5 PSF
MECHANICAL ITEMS SUSPENDED FROM STRUCTURAL FRAMING	5 PSF

LOADS SUSPENDED FROM COMPOSITE METAL DECK FLOOR SHALL NOT EXCEED 400 LBS. IN ANY 4'-0" WIDTH OF SLAB.

ROOF SNOW LOAD

GROUND SNOW LOAD, PG=	50 PSF
SNOW EXPOSURE FACTOR, CE=	1.0
SNOW LOAD IMPORTANCE FACTOR, I=	1.0
THERMAL FACTOR, CT=	1.0
FLAT ROOF SNOW LOAD, PF=	35 PSF

WIND LOAD

ULTIMATE DESIGN WIND SPEED	115 MPH
RISK CATEGORY	II
WIND EXPOSURE	C
APPLICABLE INTERNAL PRESSURE COEFFICIENT	+/-0.18
COMPONENTS AND CLADDING	

ZONE PER FIGURE 1609.6(2)	EFFECTIVE WIND AREA (SF)	C&C LOADS ADJUSTED FOR EXPOSURE (PSF)	
1	10	16.0	-31.4
1	20	16.0	-30.6
1	50	16.0	-29.6
1	100	16.0	-28.8
2	10	16.0	-52.7
2	20	16.0	-47.1
2	50	16.0	-39.7
2	100	16.0	-34.1
3	10	16.0	-79.3
3	20	16.0	-65.7
3	50	16.0	-47.7
3	100	16.0	-34.1
4	10	31.4	-34.1
4	20	30.0	-32.6
4	50	28.1	-30.8
4	100	26.7	-29.3
4	500	23.4	-26.1
5	10	31.4	-42.1
5	20	30.0	-39.2
5	50	28.1	-35.5
5	100	26.7	-32.6
5	500	23.4	-26.1

SEISMIC LOAD

RISK CATEGORY	II
SEISMIC IMPORTANCE FACTOR, IE=	1.0
MAPPED SPECTRAL RESPONSE COEFFICIENTS	S_S= 0.180
	S_1= 0.047
SITE CLASS	D
DESIGN SPECTRAL RESPONSE COEFFICIENTS	S_{DS}= 0.192
	S_{D1}= 0.075
SEISMIC DESIGN CATEGORY	B

BASIC SEISMIC FORCE RESISTING SYSTEM

EAST-WEST: ORDINARY PLAIN MASONRY SHEAR WALLS, R=1.5

NORTH-SOUTH: ORDINARY REINFORCED MASONRY SHEAR WALLS, R=4.0

SEISMIC RESPONSE COEFFICIENT

EAST-WEST: C_S= 0.128

NORTH-SOUTH: C_S= 0.048

DESIGN BASE SHEAR, VE

EAST-WEST: 26 KIP

NORTH-SOUTH: 10 KIP

ANALYSIS PROCEDURE: EQUIVALENT LATERAL FORCE PROCEDURE PER BCNYS SECTION 1617.4

BUILDING IS NOT DESIGNED FOR ADDITIONAL HORIZONTAL OR VERTICAL EXTENSIONS.

COPYRIGHT© 2022 TREDO ENGINEERS
ALL RIGHTS RESERVED. NO PART OF THIS DRAWING MAY BE REPRODUCED OR COPIED IN ANY FORM BY ANY MEANS WITHOUT THE WRITTEN PERMISSION OF THE ENGINEER.

REPRODUCTION OF THIS DRAWING FOR USE IN THE PRODUCTION OF SHOP AND/OR FIELD DETAIL DRAWINGS IS EXPRESSLY FORBIDDEN.

UNAUTHORIZED ALTERATION AND/OR DUPLICATION OF THIS DRAWING IS A VIOLATION OF SECTION 7209, SUBDIVISION 2 OF THE NEW YORK STATE EDUCATION LAW.

CJS ARCHITECTS
BUFFALO | ROCHESTER
www.cjsarchitects.com

tredo ENGINEERS
CIVIL | STRUCTURAL | ENGINEERING
755 Seneca St. #202
Buffalo, NY 14210
www.tredoengineers.com

KEY PLAN

N

COLD SPRING CONSTRUCTION CO.

ADDITION & RENOVATION

43 JACKSON STREET
AKRON, NY 14001

REV. #	DESCRIPTION	DATE

JOB NO.	2103 (T.E. JOB #21-11)
SCALE	--
ISSUE DATE	02.18.2022
DRAWN BY	MJN
CHECKED BY	MJE

THIS IS A SINGLE SHEET OF A COHESIVE SET OF CONSTRUCTION DOCUMENTS (INCLUDING DRAWINGS AND SPECIFICATIONS). INTERPRETATION OF THE INFORMATION AS PRESENTED SHOULD BE BASED ON THE ENTIRE SET OF DOCUMENTS.

DRAWING TITLE

GENERAL NOTES

S-201b

PERMIT SET

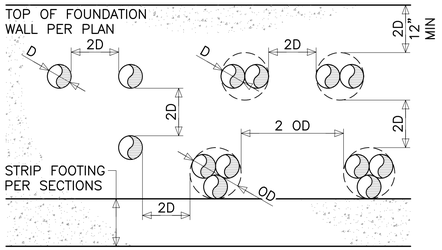

ALL BELOW GRADE UTILITIES SHALL PASS THRU STEM WALL (NOT FOOTING). IF UTILITY ELEVATION IS BELOW TOP OF FOOTING, UTILIZE TYPICAL ELEVATION OF STEPPED WALL FOOTING DETAIL TO LOWER FOUNDATIONS BELOW PENETRATION.

MEP SUBCONTRACTOR TO COORDINATE WITH CONTRACTOR ALL PENETRATIONS, SLEEVES, ETC.

NO PENETRATIONS OR SLEEVES SHALL BE CORED OR FIELD CUT WITHOUT THE EXPRESS APPROVAL OF THE STRUCTURAL ENGINEER OF RECORD.

IF BUNDLED UTILITIES EXCEED 24" IN WIDTH, UTILIZE TYPICAL REINFORCING at OPENING IN CONCRETE WALLS DETAIL.

3 TYPICAL SLEEVE SPACE DETAIL IN FROST WALL

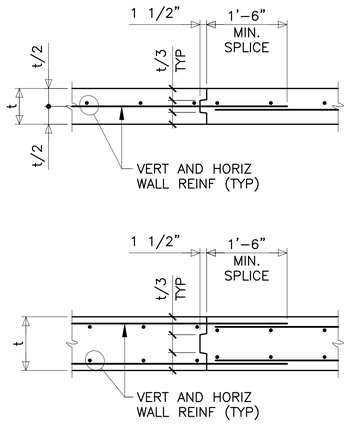

2 WALL CONSTRUCTION JOINT

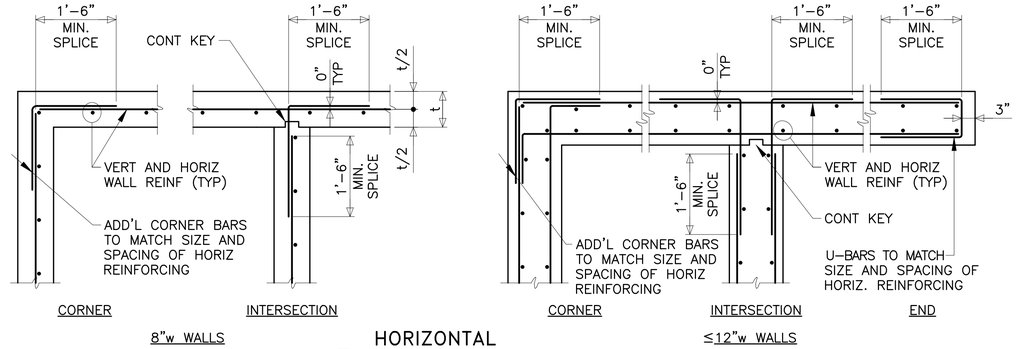

1 HORIZONTAL WALL REINFORCEMENT

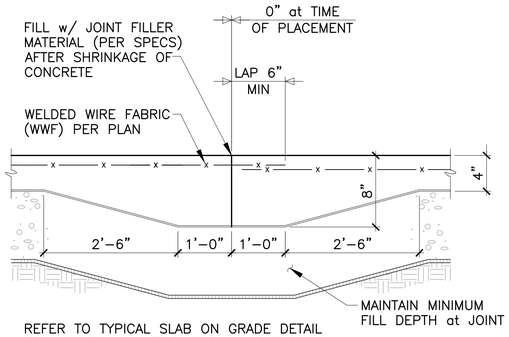

REFER TO TYPICAL SLAB ON GRADE DETAIL FOR ADDITIONAL INFORMATION NOT SHOWN

7 FORMED JOINT DETAIL (FJ) at SLAB ON GRADE

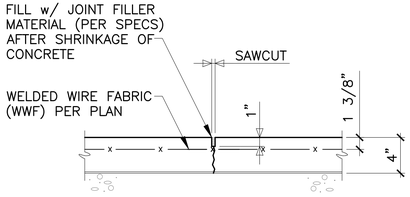

SAWCUT JOINT (PER SPECS)
REFER TO TYPICAL SLAB ON GRADE DETAIL FOR ADDITIONAL INFORMATION NOT SHOWN

6 SAWCUT JOINT DETAIL (SJ) at SLAB ON GRADE

NOTE: USE OF VAPOR RETARDER REQUIRES WRITTEN ASSURANCE FROM FLATWORK CONTRACTOR THAT CURLING OR CUPPED SLAB WILL BE GROUND SMOOTH AND LEVEL IF REQUIRED

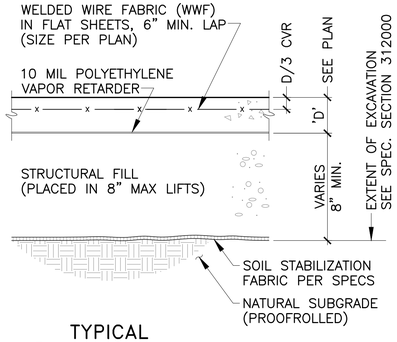

5 TYPICAL SLAB ON GRADE DETAIL

FOR AREAS WITH VCT, TILE OR CARPET COORDINATE WITH ARCH DRAWINGS

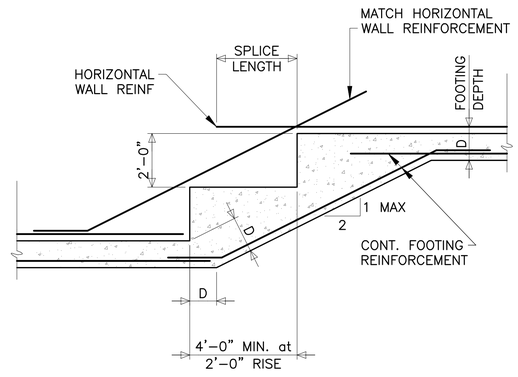

4 ELEVATION OF STEPPED WALL FOOTING

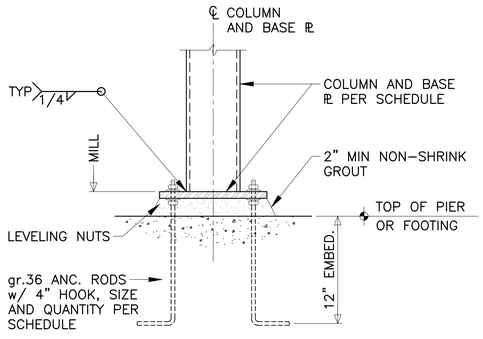

10 COLUMN BASE DETAIL

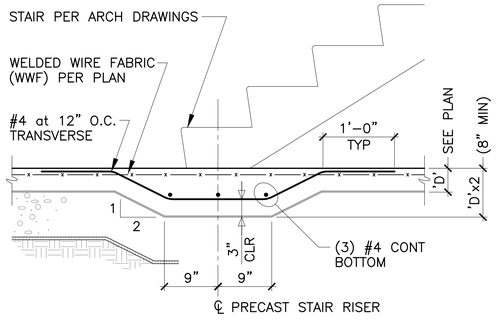

REFER TO TYPICAL SLAB ON GRADE DETAIL FOR ADDITIONAL INFORMATION NOT SHOWN

9 THICKENED SLAB DETAIL at STAIR BASE

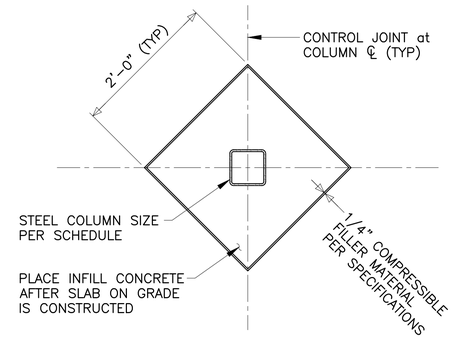

8 CONTROL JOINT DETAIL at COLUMN

COPYRIGHT© 2022 TREDO ENGINEERS
ALL RIGHTS RESERVED. NO PART OF THIS DRAWING MAY BE REPRODUCED OR COPIED IN ANY FORM BY ANY MEANS WITHOUT THE WRITTEN PERMISSION OF THE ENGINEER.

REPRODUCTION OF THIS DRAWING FOR USE IN THE PRODUCTION OF SHOP AND/OR FIELD DETAIL DRAWINGS IS EXPRESSLY FORBIDDEN.

UNAUTHORIZED ALTERATION AND/OR DUPLICATION OF THIS DRAWING IS A VIOLATION OF SECTION 7209, PROVISION 2, OF THE NEW YORK STATE EDUCATION LAW.

CJS ARCHITECTS
BUFFALO | ROCHESTER
www.cjsarchitects.com

tredo ENGINEERS
CIVIL | STRUCTURAL | ENGINEERING
755 Seneca St. #202
Buffalo, NY 14210
www.tredoengineers.com

KEY PLAN

COLD SPRING CONSTRUCTION CO.

ADDITION & RENOVATION

43 JACKSON STREET
AKRON, NY 14001

REV. #	DESCRIPTION	DATE

JOB NO.	2103 (T.E. JOB #21-11)
SCALE	N.T.S.
ISSUE DATE	02.18.2022
DRAWN BY	MJN
CHECKED BY	MJE

THIS IS A SINGLE SHEET OF A COHESIVE SET OF CONSTRUCTION DOCUMENTS (INCLUDING DRAWINGS AND SPECIFICATIONS). INTERPRETATION OF THE INFORMATION AS PRESENTED SHOULD BE BASED ON THE ENTIRE SET OF DOCUMENTS.

DRAWING TITLE

TYPICAL DETAILS

S-202

PERMIT SET

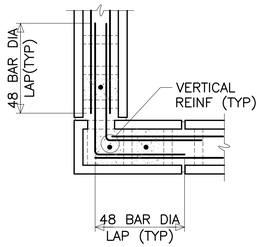

1C at CORNERS

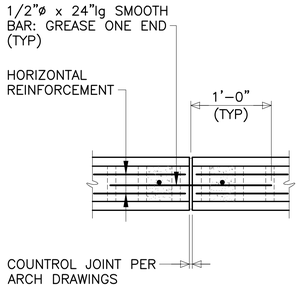

1B at CONTROL JTS

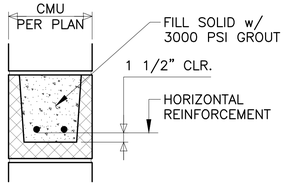

NOTE:

1. REINFORCING IN BOND BEAMS LOCATED at ROOF LEVELS TO BE CONTINUOUS THRU CONTROL JOINTS
2. REINFORCING IN INTERMEDIATE BOND BEAMS (i.e. at DOORS AND WINDOWS) TO BE DISCONTINUOUS at CONTROL JOINTS

BOND BEAM REINFORCING

1A

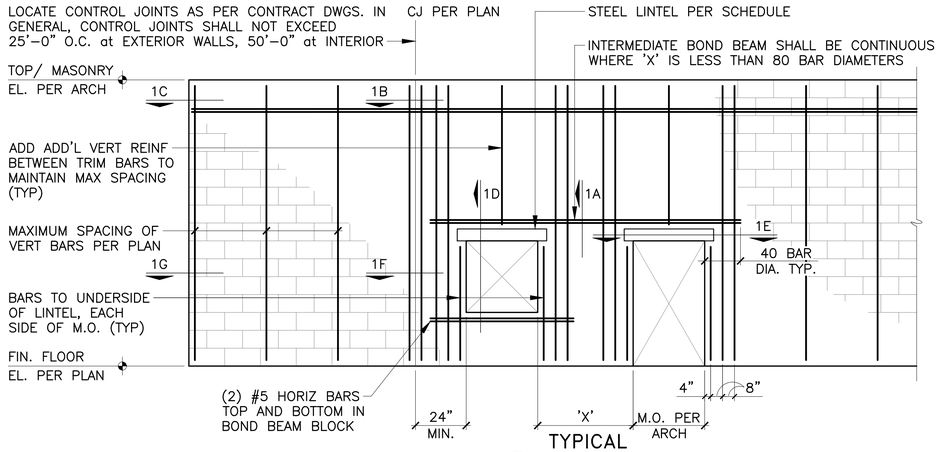

TYPICAL CMU WALL ELEVATION

1

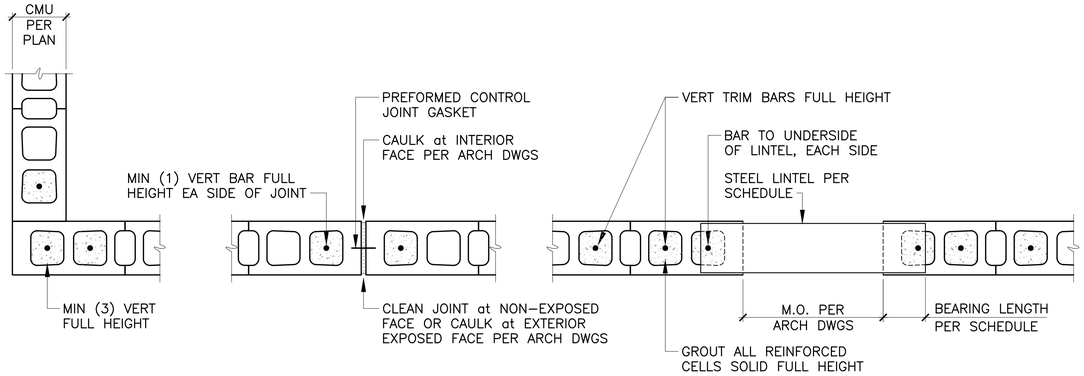

NOTE:
ALL VERTICAL AND HORIZONTAL BARS SHALL MATCH TYPICAL REINFORCING INDICATED ON PLAN UNLESS NOTED OTHERWISE

1G at CORNERS

1F at CONTROL JTS

1E at LINTELS

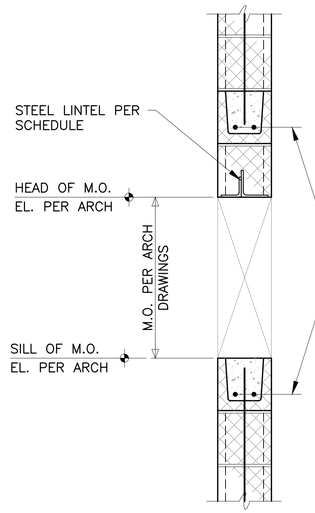

1D DETAIL at M.O.

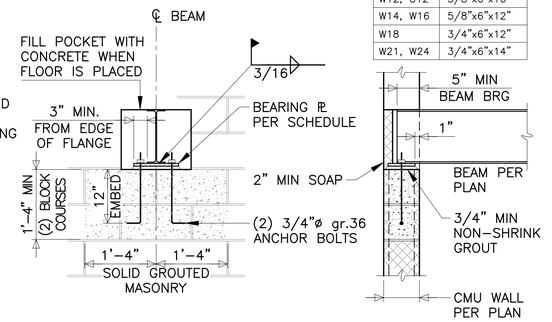

BEAM BEARING PERPENDICULAR TO CMU WALL

2

BEARING PLATES	
D-BM. DEPTH	SIZE
W8, C8	1/2"x6"x8"
W10, C10	1/2"x6"x10"
W12, C12	5/8"x6"x10"
W14, W16	5/8"x6"x12"
W18	3/4"x6"x12"
W21, W24	3/4"x6"x14"

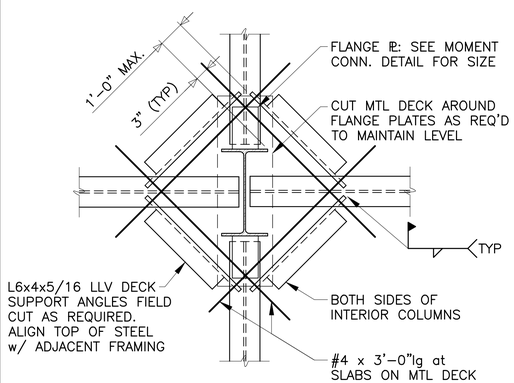

DECK SUPPORT at INTERIOR OR EXTERIOR COLUMNS AND at FLANGE PLATE MOMENT CONNECTIONS
REQ'D at COLUMNS ≥ 16" IN ACTUAL DEPTH

4

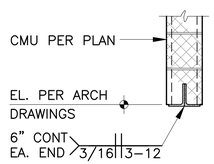

LINTEL DETAIL

LOAD BEARING CMU LINTEL SCHEDULE

MARK	SIZE	MAX OPNG WIDTH	MIN BEARING EACH END	REMARKS
L1	L6x 3 1/2 x5/16 LLV	6'-4"	6"	
L2	L5x5x5/16 + L4x4x5/16	6'-4"	6"	
L3	(3) L6x 3 1/2 x5/16 LLV	6'-8"	6"	

NOTES

1. REFER TO ARCH AND MECH DRAWINGS FOR EXACT SIZE AND LOCATION OF ALL MASONRY WALL OPENINGS
2. EXTERIOR ANGLES AND LINTEL PLATES SHALL BE GALVANIZED

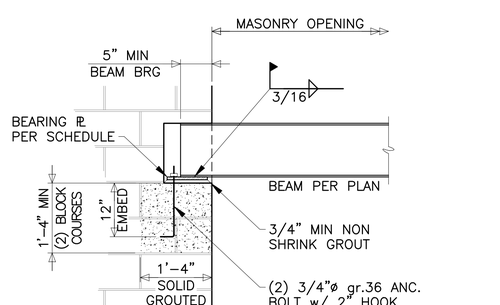

BEAM BEARING PARALLEL TO CMU WALL

3

COPYRIGHT© 2022 TREDO ENGINEERS
ALL RIGHTS RESERVED. NO PART OF THIS DRAWING MAY BE REPRODUCED OR COPIED IN ANY FORM BY ANY MEANS WITHOUT THE WRITTEN PERMISSION OF THE ENGINEER.
REPRODUCTION OF THIS DRAWING FOR USE IN THE PRODUCTION OF SHOP AND/OR FIELD DETAIL DRAWINGS IS EXPRESSLY FORBIDDEN.
UNAUTHORIZED ALTERATION AND/OR DUPLICATION OF THIS DRAWING IS A VIOLATION OF SECTION 7209, PROVISION 2, OF THE NEW YORK STATE EDUCATION LAW.

CJS ARCHITECTS
BUFFALO | ROCHESTER
www.cjsarchitects.com

tredo ENGINEERS
CIVIL | STRUCTURAL | ENGINEERING
755 Seneca St. #202
Buffalo, NY 14210
www.tredoengineers.com

KEY PLAN

COLD SPRING CONSTRUCTION CO.

ADDITION & RENOVATION

43 JACKSON STREET
AKRON, NY 14001

REV. #	DESCRIPTION	DATE

JOB NO.	2103 (T.E. JOB #21-11)
SCALE	N.T.S.
ISSUE DATE	02.18.2022
DRAWN BY	MJN
CHECKED BY	MJE

THIS IS A SINGLE SHEET OF A COHESIVE SET OF CONSTRUCTION DOCUMENTS (INCLUDING DRAWINGS AND SPECIFICATIONS). INTERPRETATION OF THE INFORMATION AS PRESENTED SHOULD BE BASED ON THE ENTIRE SET OF DOCUMENTS.

DRAWING TITLE

TYPICAL DETAILS

S-203

PERMIT SET

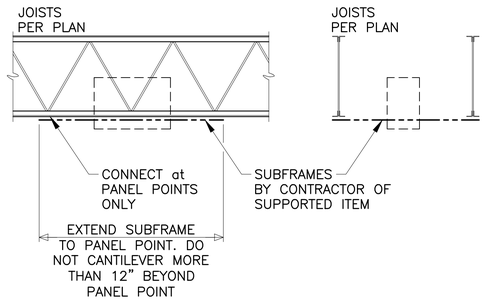

3 LOAD SUSPENSION DETAIL at ROOF

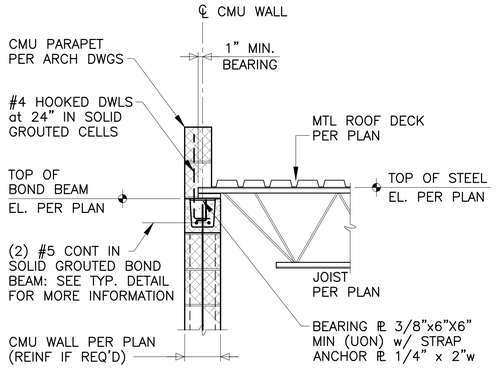

2 JOIST BEARING ON MASONRY WALL at ROOF

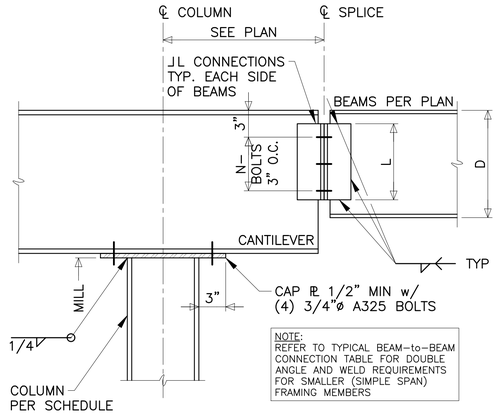

1 BEAM OVER COLUMN AND BEAM SPLICE CONN. DETAIL

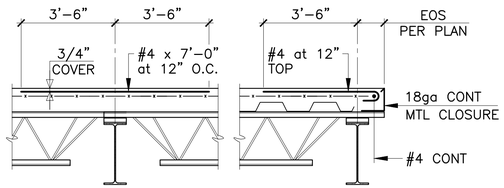

7 JOIST SUPPORTED EDGE OF SLAB DETAIL

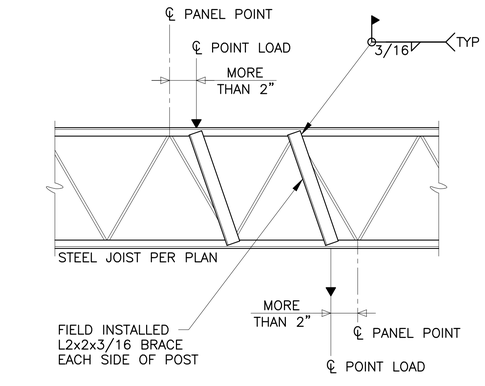

6 JOIST REINFORCEMENT at CONCENTRATED LOADS

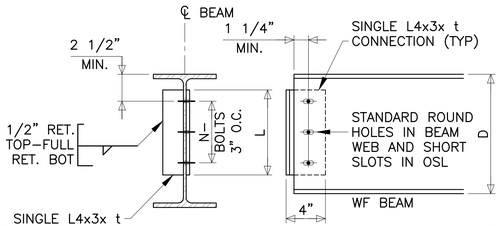

L–ANGLE LENGTH (in)	ANGLE THICKNESS (in)	WELD SIZE (in)	N–3/4" DIA. A325N BOLTS IN ONE ROW	MIN. SUPPORTED BEAM WEB THK–NESS (in)	ALLOWABLE REACTION (KIPS)	MIN. SUPPORTING WEB w/ ANGLES BOTH SIDES OF WEB (IN)
5–1/2	3/8	3/16	2	3/16	15	0.286
5–1/2	3/8	1/4	2	3/16	20	0.286
8–1/2	3/8	3/16	3	3/16	25	0.381
8–1/2	3/8	1/4	3	1/4	30	0.381
11–1/2	3/8	1/4	4	1/4	40	0.381
14–1/2	3/8	1/4	5	1/4	50	0.381
17–1/2	3/8	1/4	6	5/16	60	0.381
20–1/2	3/8	1/4	7	5/16	70	0.381
23–1/2	3/8	1/4	8	5/16	80	0.381
26–1/2	3/8	1/4	9	5/16	95	0.381
29–1/2	3/8	1/4	10	5/16	100	0.381

5 SINGLE ANGLE/BENT PLATE CONN. (BEAM–to–COLUMN, BEAM–to–BEAM)

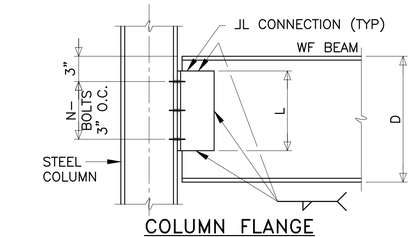

COLUMN FLANGE

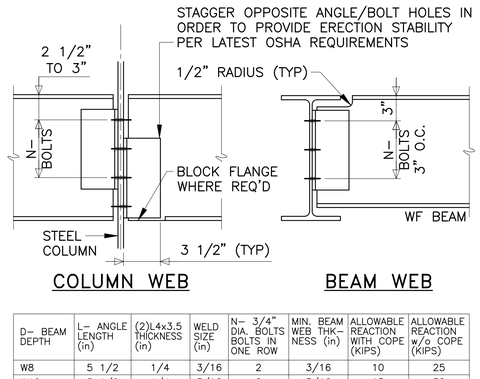

COLUMN WEB

BEAM WEB

D– BEAM DEPTH	L– ANGLE LENGTH (in)	(2)L4x3.5 THICKNESS (in)	WELD SIZE (in)	N– 3/4" DIA. BOLTS BOLTS IN ONE ROW	MIN. BEAM WEB THK–NESS (in)	ALLOWABLE REACTION WITH COPE (KIPS)	ALLOWABLE REACTION w/o COPE (KIPS)
W8	5 1/2	1/4	3/16	2	3/16	10	25
W10	5 1/2	1/4	3/16	2	3/16	15	30
W12	5 1/2	1/4	3/16	2	3/16	25	30
W14	8 1/2	1/4	3/16	3	1/4	50	55
W16, W18	8 1/2	1/4	3/16	3	1/4	60	60
W16–W24	11 1/2	1/4	3/16	4	1/4	75	75
W18–W30	14 1/2	1/4	3/16	5	3/8	100	100
W21–W40	17 1/2	1/4	3/16	6	3/8	125	125
W24–W44	20 1/2	5/16	1/4	7	3/8	145	145
W30–W44	23 1/2	5/16	1/4	8	1/2	165	165
W33–W44	26 1/2	5/16	1/4	9	1/2	185	185
W36–W44	29 1/2	5/16	1/4	10	5/8	205	205

NOTE: TABLE ASSUMES A 4.5"x2" TOP FLANGE COPE. ANY BEAM WITH COPE EXCEEDING DETAIL SHOWN SHALL BE DESIGNED INDEPENDENTLY. ALL CONN'S REQUIRING BOTTOM FLANGE COPES TO BE CHECKED INDEPENDENTLY

4 SIMPLE 'TYPE 2' BEAM–to–COLUMN AND BEAM–to–BEAM CONNECTIONS

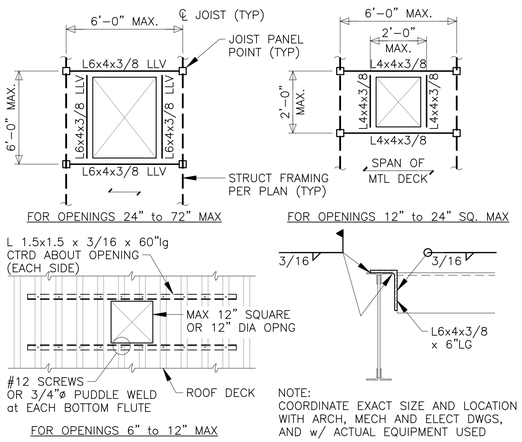

11 REINF. at OPENINGS IN METAL DECK at ROOF

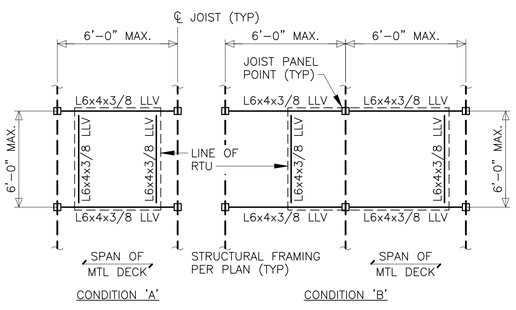

10 TYPICAL REINFORCING at ROOFTOP AIR HANDLING UNITS

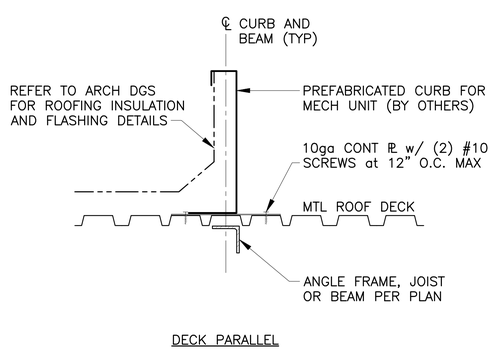

9 ROOFTOP UNIT CURB DETAIL

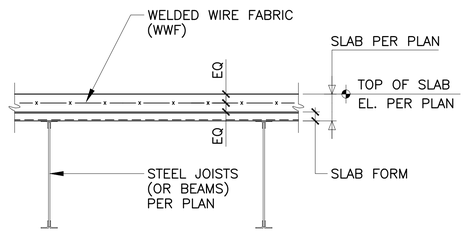

8 SLAB REINFORCEMENT DETAIL

(SLAB THICKNESS LESS THAN OR EQUAL TO 3" TOTAL)

COPYRIGHT© 2022 TREDO ENGINEERS ALL RIGHTS RESERVED. NO PART OF THIS DRAWING MAY BE REPRODUCED OR COPIED IN ANY FORM BY ANY MEANS WITHOUT THE WRITTEN PERMISSION OF THE ENGINEER.
REPRODUCTION OF THIS DRAWING FOR USE IN THE PRODUCTION OF SHOP AND/OR FIELD DETAIL DRAWINGS IS EXPRESSLY FORBIDDEN.
UNAUTHORIZED ALTERATION AND/OR DUPLICATION OF THIS DRAWING IS A VIOLATION OF SECTION 7209, SUBDIVISION 2, OF THE NEW YORK STATE EDUCATION LAW.

CJS ARCHITECTS
BUFFALO | ROCHESTER
www.cjsarchitects.com

tredo ENGINEERS
CIVIL | STRUCTURAL | ENGINEERING
755 Seneca St. #202
Buffalo, NY 14210
www.tredoengineers.com

KEY PLAN N

COLD SPRING CONSTRUCTION CO.

ADDITION & RENOVATION

43 JACKSON STREET
AKRON, NY 14001

REV. #	DESCRIPTION	DATE

JOB NO.	2103 (T.E. JOB #21-11)
SCALE	N.T.S.
ISSUE DATE	02.18.2022
DRAWN BY	MJN
CHECKED BY	MJE

THIS IS A SINGLE SHEET OF A COHESIVE SET OF CONSTRUCTION DOCUMENTS (INCLUDING DRAWINGS AND SPECIFICATIONS). INTERPRETATION OF THE INFORMATION AS PRESENTED SHOULD BE BASED ON THE ENTIRE SET OF DOCUMENTS.

DRAWING TITLE

TYPICAL DETAILS

S-204

PERMIT SET

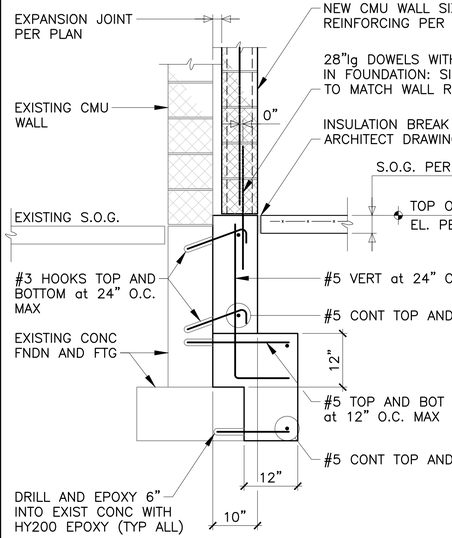

4 3/4" = 1'–0"

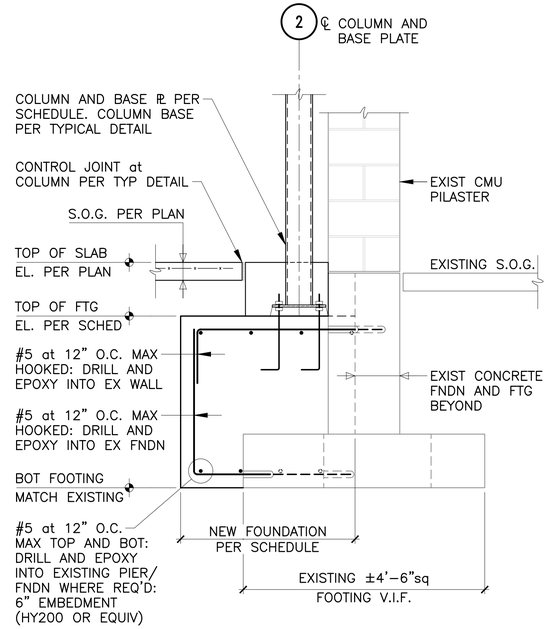

3 3/4" = 1'–0"

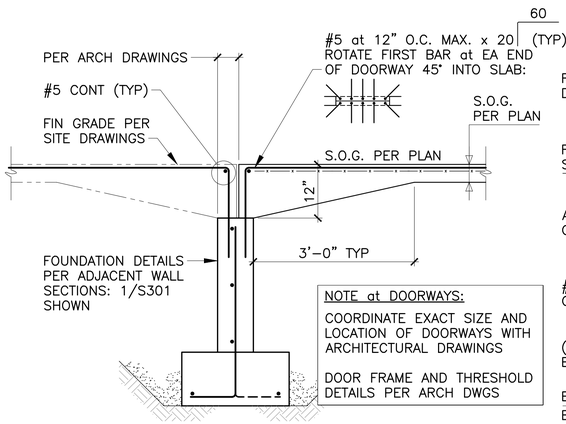

2 3/4" = 1'–0"

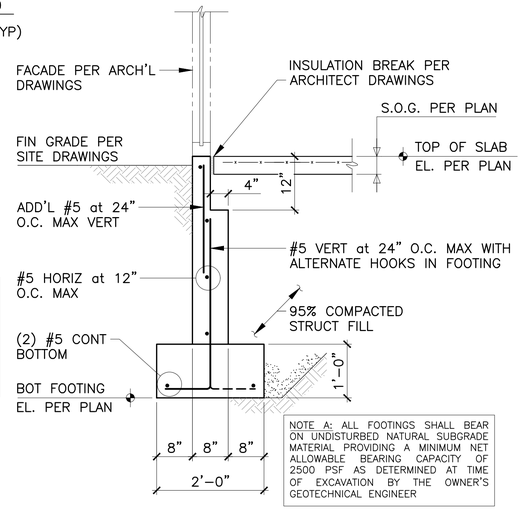

1 3/4" = 1'–0"

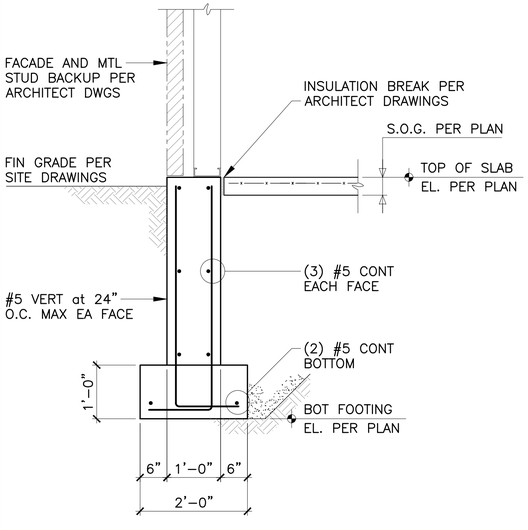

7 3/4" = 1'–0"

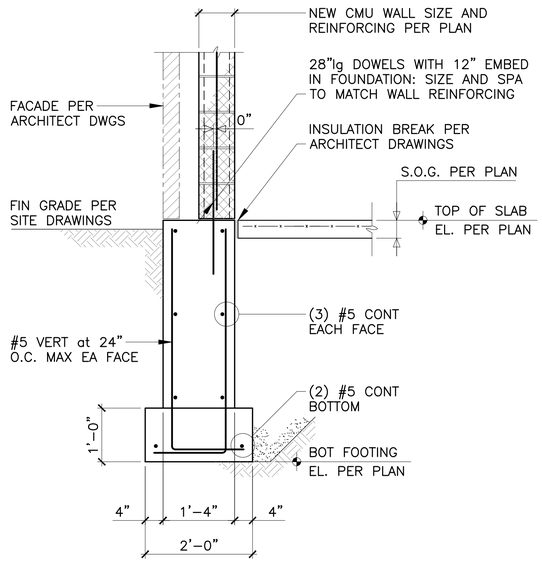

6 3/4" = 1'–0"

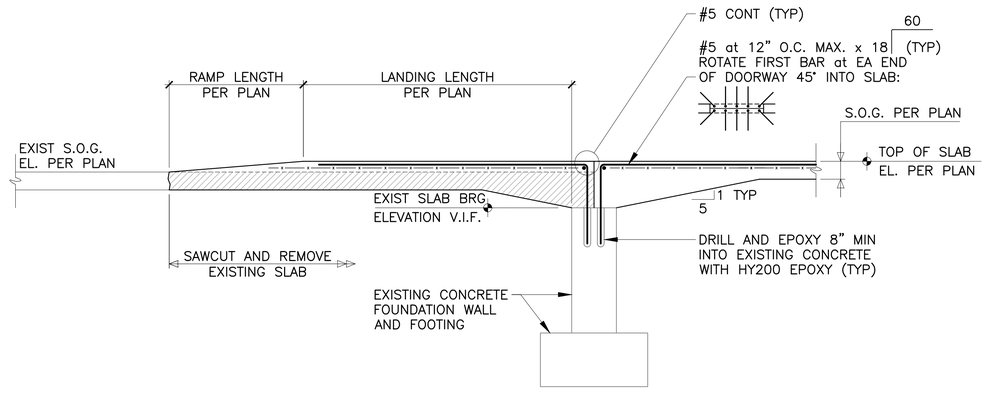

5 3/4" = 1'–0"

COPYRIGHT© 2022 TREDO ENGINEERS
ALL RIGHTS RESERVED. NO PART OF THIS DRAWING MAY BE REPRODUCED, OR COPIED IN ANY FORM BY ANY MEANS WITHOUT THE WRITTEN PERMISSION OF THE ENGINEER.
REPRODUCTION OF THIS DRAWING FOR USE IN THE PRODUCTION OF SHOP DRAWINGS OR FIELD DRAWINGS IS EXPRESSLY FORBIDDEN.
UNAUTHORIZED ALTERATION AND/OR DUPLICATION OF THIS DRAWING IS A VIOLATION OF SECTION 7209, PROVISION 2, OF THE NEW YORK STATE EDUCATION LAW.

CJS ARCHITECTS
BUFFALO | ROCHESTER
www.cjsarchitects.com

tredo ENGINEERS
CIVIL | STRUCTURAL | ENGINEERING
755 Seneca St. #202
Buffalo, NY 14210
www.tredoengineers.com

KEY PLAN N

COLD SPRING CONSTRUCTION CO.

ADDITION & RENOVATION

43 JACKSON STREET
AKRON, NY 14001

REV. #	DESCRIPTION	DATE

JOB NO.	2103 (T.E. JOB #21-11)
SCALE	AS NOTED
ISSUE DATE	02.18.2022
DRAWN BY	MJN
CHECKED BY	MJE

THIS IS A SINGLE SHEET OF A COHESIVE SET OF CONSTRUCTION DOCUMENTS (INCLUDING DRAWINGS AND SPECIFICATIONS). INTERPRETATION OF THE INFORMATION AS PRESENTED SHOULD BE BASED ON THE ENTIRE SET OF DOCUMENTS.

DRAWING TITLE

SECTIONS and DETAILS

S-301

PERMIT SET

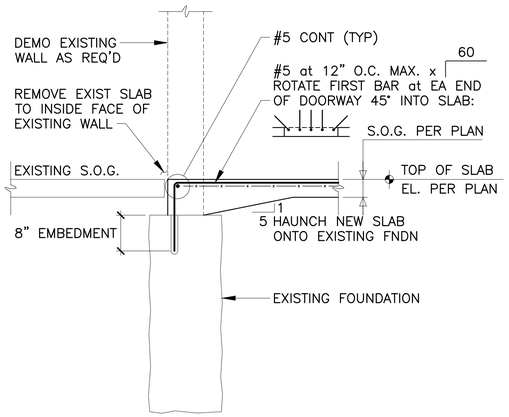

4 3/4" = 1'–0"

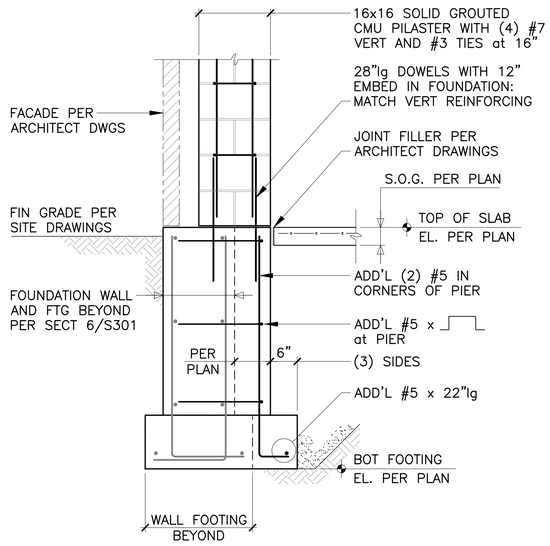

3 3/4" = 1'–0"

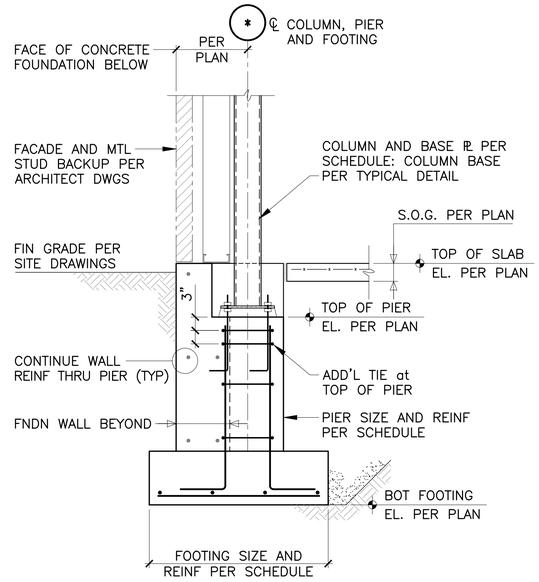

2 3/4" = 1'–0"

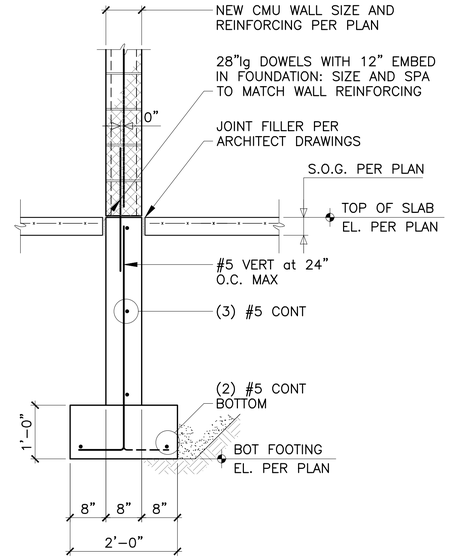

1 3/4" = 1'–0"

COPYRIGHT© 2022 TREDO ENGINEERS
ALL RIGHTS RESERVED. NO PART OF THIS DRAWING MAY BE REPRODUCED, OR COPIED IN ANY FORM BY ANY MEANS WITHOUT THE WRITTEN PERMISSION OF THE ENGINEER.

REPRODUCTION OF THIS DRAWING FOR USE IN THE PRODUCTION OF SHOP DRAWINGS OR DETAIL DRAWINGS IS EXPRESSLY FORBIDDEN.

UNAUTHORIZED ALTERATION AND/OR DUPLICATION OF THIS DRAWING IS A VIOLATION OF SECTION 7209, PROVISION 2, OF THE NEW YORK STATE EDUCATION LAW.

CJS ARCHITECTS
BUFFALO | ROCHESTER
www.cjsarchitects.com

tredo ENGINEERS
CIVIL | STRUCTURAL | ENGINEERING
755 Seneca St. #202
Buffalo, NY 14210
www.tredoengineers.com

KEY PLAN

COLD SPRING CONSTRUCTION CO.

ADDITION & RENOVATION

43 JACKSON STREET
AKRON, NY 14001

REV. #	DESCRIPTION	DATE

JOB NO.	2103 (T.E. JOB #21-11)
SCALE	AS NOTED
ISSUE DATE	02.18.2022
DRAWN BY	MJN
CHECKED BY	MJE

THIS IS A SINGLE SHEET OF A COHESIVE SET OF CONSTRUCTION DOCUMENTS (INCLUDING DRAWINGS AND SPECIFICATIONS). INTERPRETATION OF THE INFORMATION AS PRESENTED SHOULD BE BASED ON THE ENTIRE SET OF DOCUMENTS.

DRAWING TITLE

SECTIONS and DETAILS

S-302

PERMIT SET

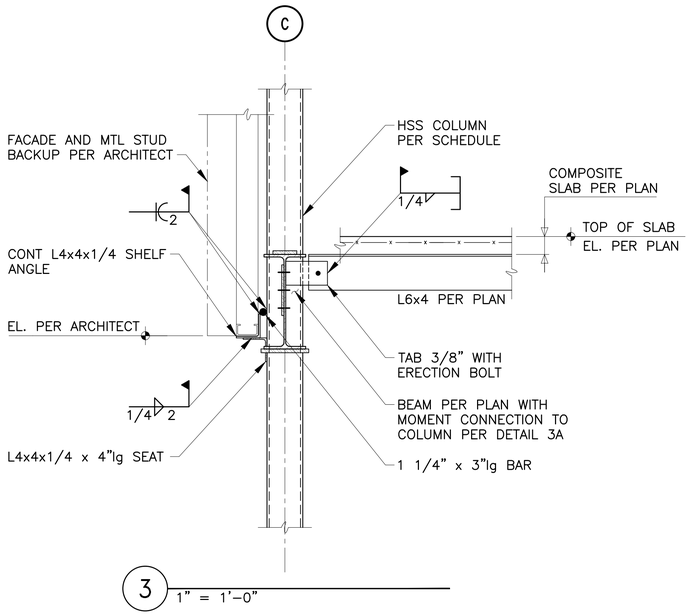

3 1" = 1'–0"

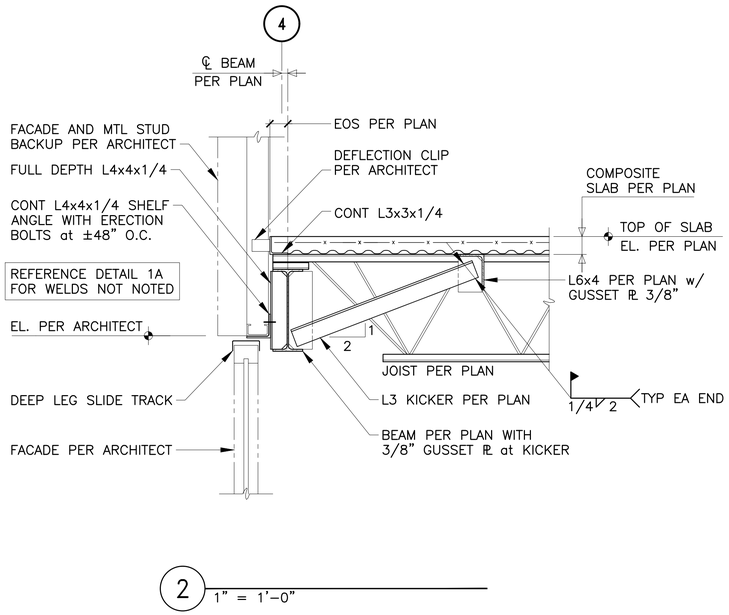

2 1" = 1'–0"

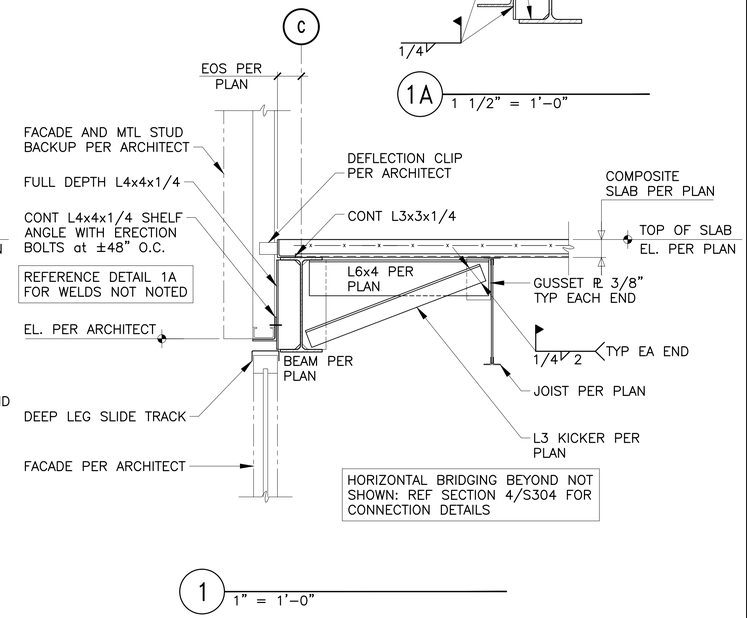

1 1" = 1'–0"

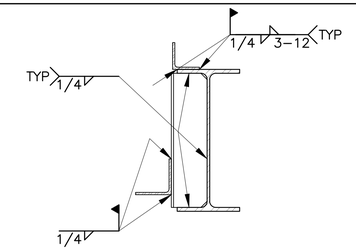

1A 1 1/2" = 1'–0"

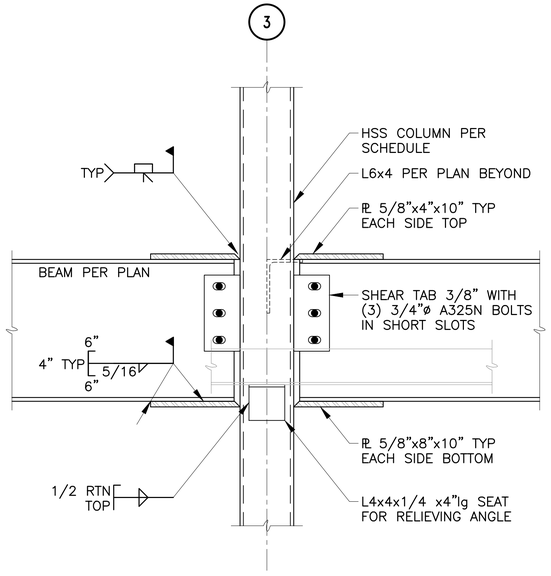

3A 1 1/2" = 1'–0"

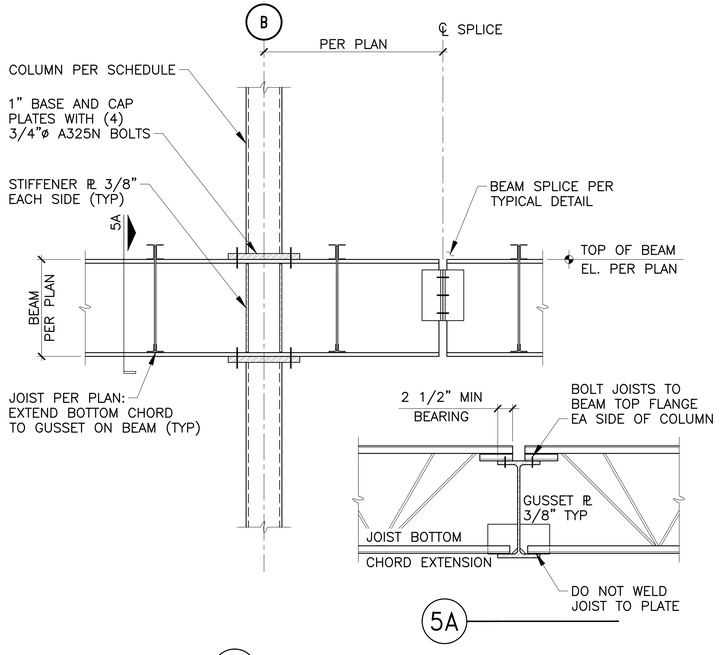

5A

5 1" = 1'–0"

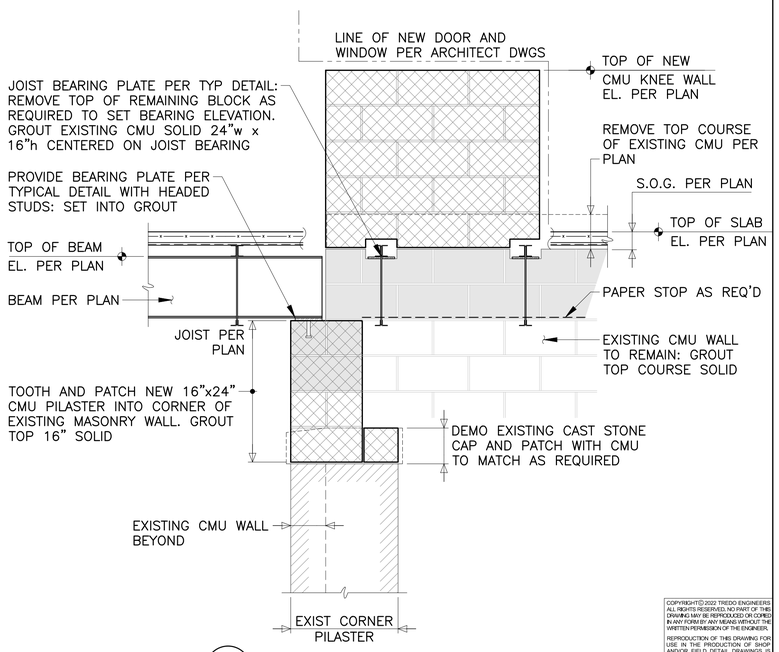

4 3/4" = 1'–0"

COPYRIGHT© 2022 TREDO ENGINEERS
ALL RIGHTS RESERVED. NO PART OF THIS DRAWING MAY BE REPRODUCED, OR COPIED IN ANY FORM BY ANY MEANS WITHOUT THE WRITTEN PERMISSION OF THE ENGINEER.
REPRODUCTION OF THIS DRAWING FOR USE IN THE PRODUCTION OF SHOP DRAWINGS OR SCHEDULES, DRAWINGS IS EXPRESSLY FORBIDDEN.
UNAUTHORIZED ALTERATION AND/OR DUPLICATION OF THIS DRAWING IS A VIOLATION OF SECTION 7209, PROVISION 2, OF THE NEW YORK STATE EDUCATION LAW.

CJS ARCHITECTS
BUFFALO | ROCHESTER
www.cjsarchitects.com

tredo ENGINEERS
CIVIL | STRUCTURAL | ENGINEERING
755 Seneca St. #202
Buffalo, NY 14210
www.tredoengineers.com

KEY PLAN N

COLD SPRING CONSTRUCTION CO.

ADDITION & RENOVATION

43 JACKSON STREET
AKRON, NY 14001

REV. #	DESCRIPTION	DATE

JOB NO.	2103 (T.E. JOB #21-11)
SCALE	AS NOTED
ISSUE DATE	02.18.2022
DRAWN BY	MJN
CHECKED BY	MJE

THIS IS A SINGLE SHEET OF A COHESIVE SET OF CONSTRUCTION DOCUMENTS (INCLUDING DRAWINGS AND SPECIFICATIONS). INTERPRETATION OF THE INFORMATION AS PRESENTED SHOULD BE BASED ON THE ENTIRE SET OF DOCUMENTS.

DRAWING TITLE

SECTIONS and DETAILS

S-303

PERMIT SET

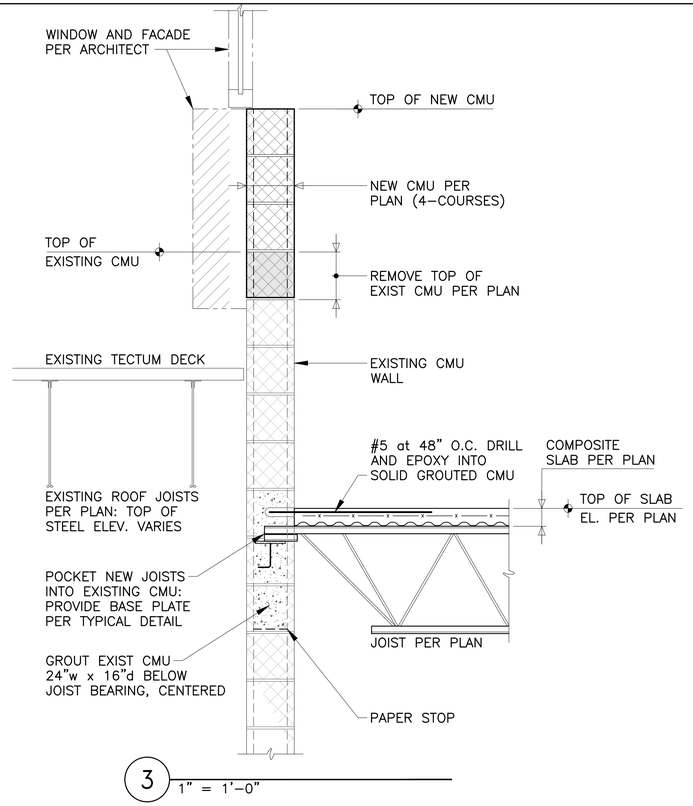

3 1" = 1'–0"

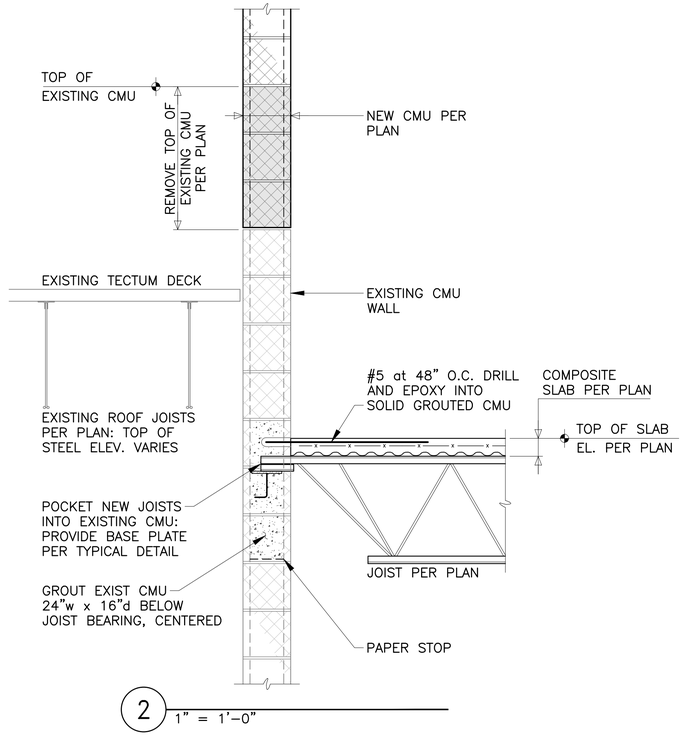

2 1" = 1'–0"

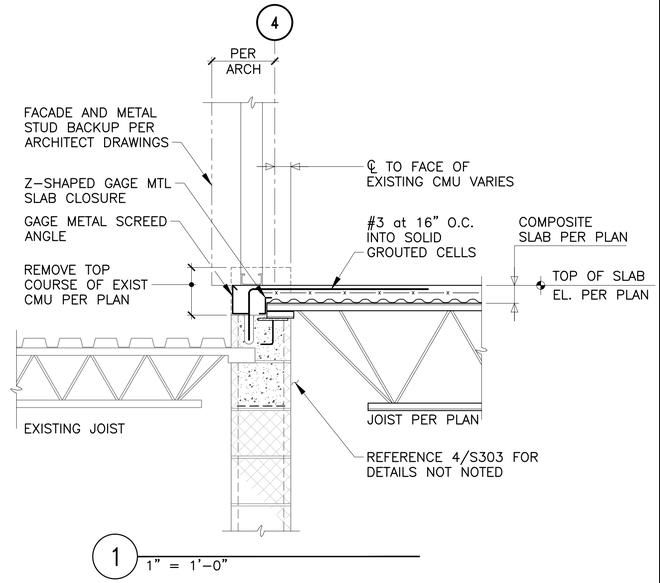

1 1" = 1'–0"

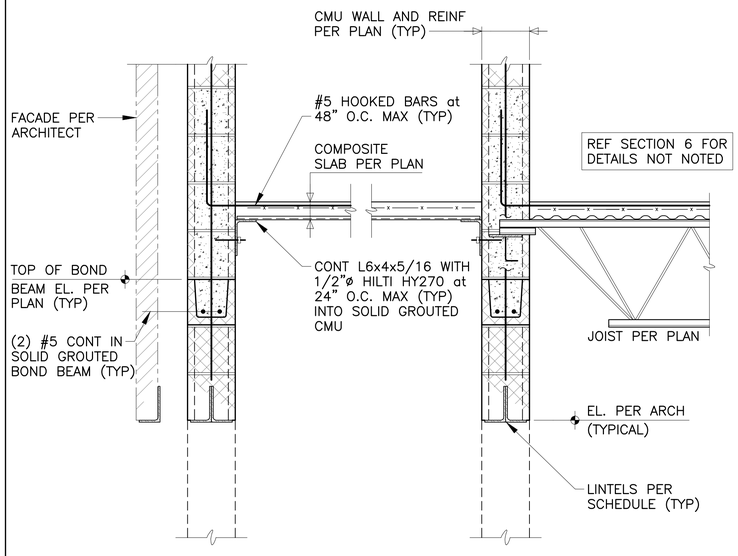

6 1" = 1'–0"

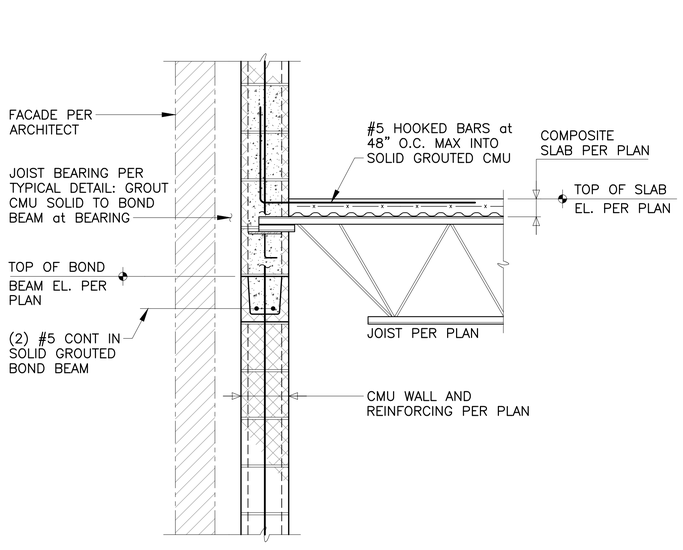

5 1" = 1'–0"

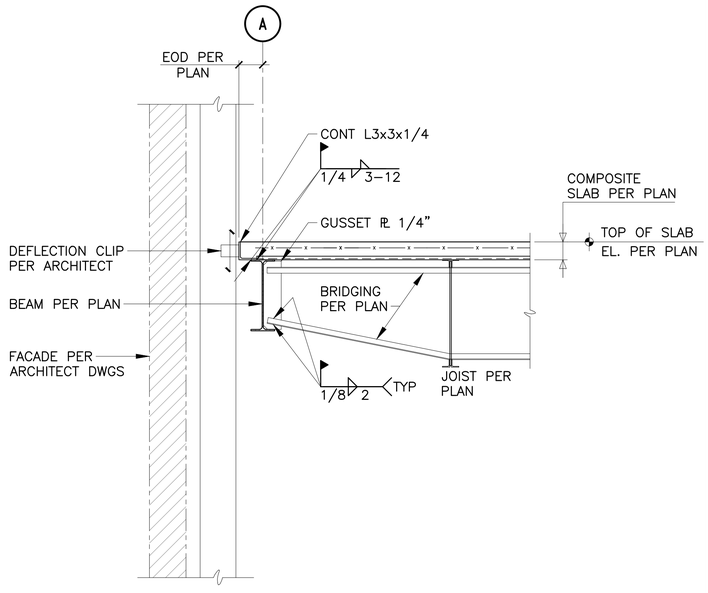

4 1" = 1'–0"

COPYRIGHT© 2022 TREDO ENGINEERS
ALL RIGHTS RESERVED. NO PART OF THIS DRAWING MAY BE REPRODUCED, OR COPIED IN ANY FORM BY ANY MEANS WITHOUT THE WRITTEN PERMISSION OF THE ENGINEER.

REPRODUCTION OF THIS DRAWING FOR USE IN THE PRODUCTION OF SHOP DRAWINGS OR FIELD DRAWINGS IS EXPRESSLY FORBIDDEN.

UNAUTHORIZED ALTERATION AND/OR DUPLICATION OF THIS DRAWING IS A VIOLATION OF SECTION 7209, PROVISION 2, OF THE NEW YORK STATE EDUCATION LAW.

CJS ARCHITECTS
BUFFALO | ROCHESTER
www.cjsarchitects.com

tredo ENGINEERS
CIVIL | STRUCTURAL | ENGINEERING
755 Seneca St. #202
Buffalo, NY 14210
www.tredoengineers.com

KEY PLAN N

COLD SPRING CONSTRUCTION CO.

ADDITION & RENOVATION

43 JACKSON STREET
AKRON, NY 14001

REV. #	DESCRIPTION	DATE

JOB NO.	2103 (T.E. JOB #21-11)
SCALE	AS NOTED
ISSUE DATE	02.18.2022
DRAWN BY	MJN
CHECKED BY	MJE

THIS IS A SINGLE SHEET OF A COHESIVE SET OF CONSTRUCTION DOCUMENTS (INCLUDING DRAWINGS AND SPECIFICATIONS). INTERPRETATION OF THE INFORMATION AS PRESENTED SHOULD BE BASED ON THE ENTIRE SET OF DOCUMENTS.

DRAWING TITLE

SECTIONS and DETAILS

S-304

PERMIT SET

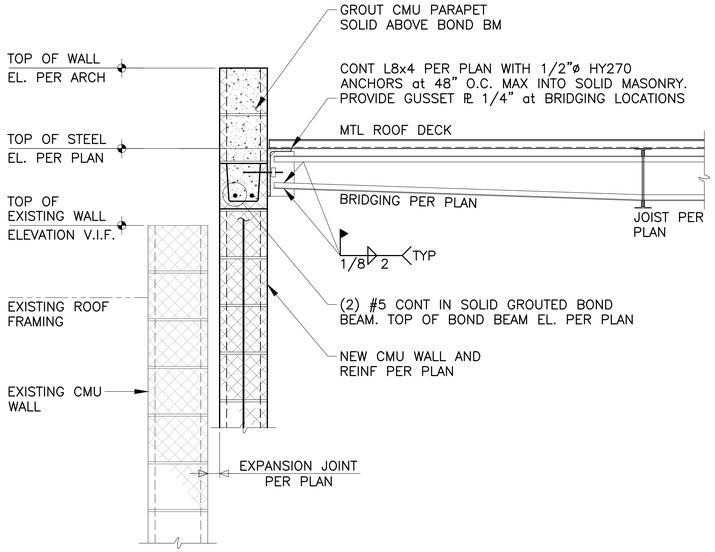

2 1" = 1'–0"

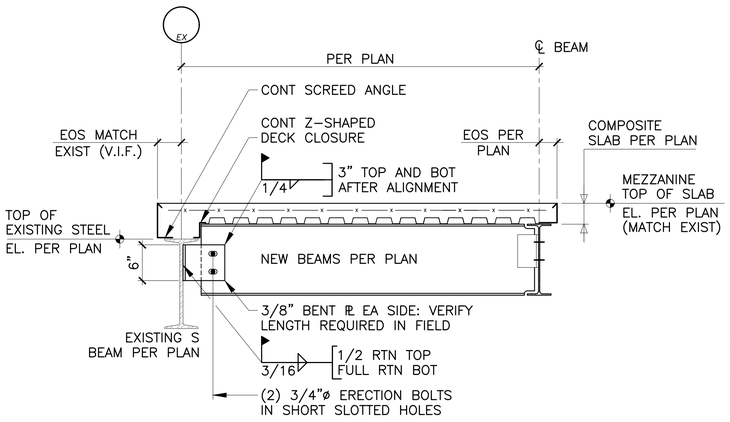

1 1" = 1'–0"

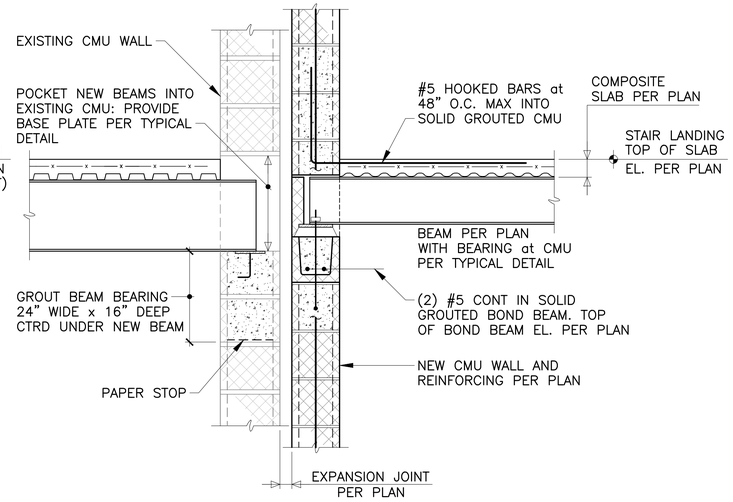

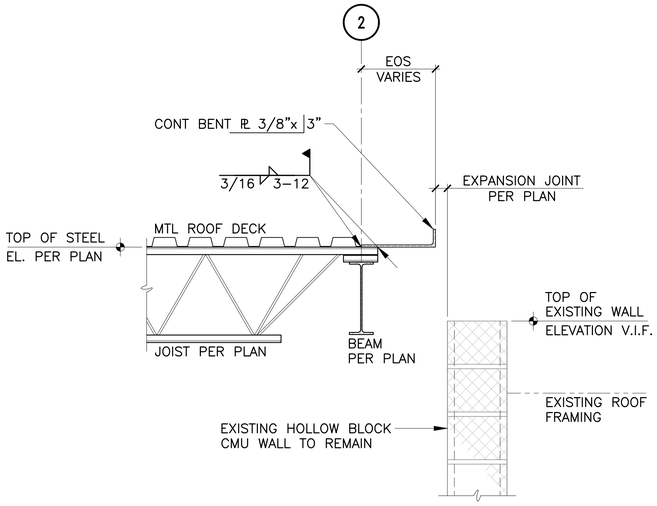

4 1" = 1'–0"

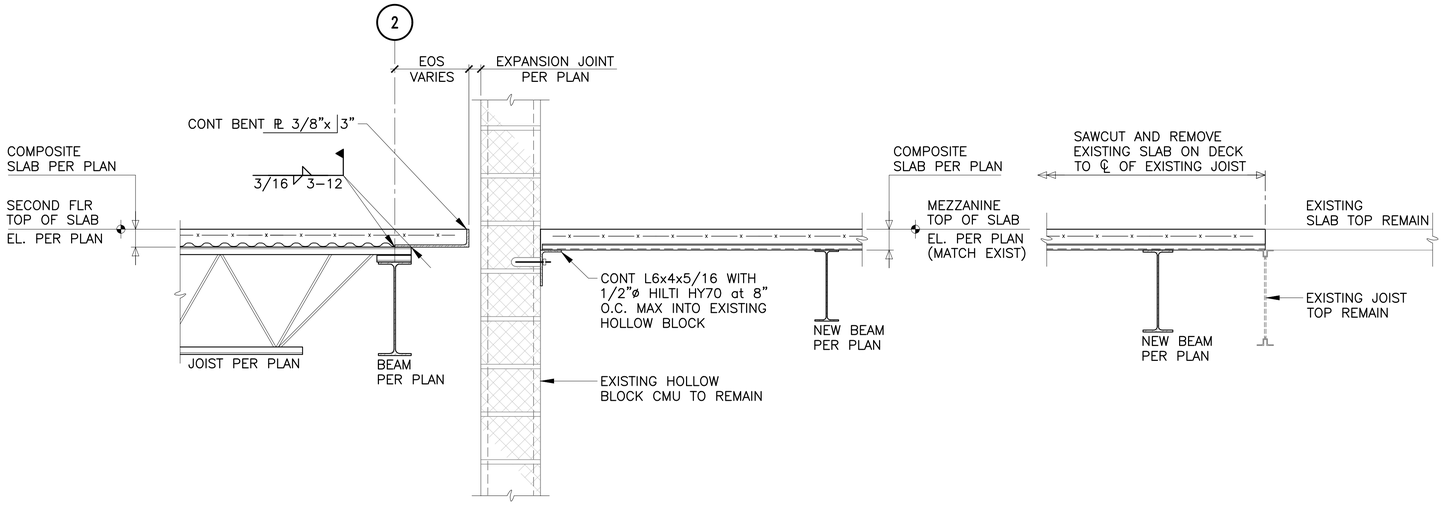

3 1" = 1'–0"

COPYRIGHT© 2022 TREDO ENGINEERS
ALL RIGHTS RESERVED. NO PART OF THIS DRAWING MAY BE REPRODUCED, OR COPIED IN ANY FORM BY ANY MEANS WITHOUT THE WRITTEN PERMISSION OF THE ENGINEER.

REPRODUCTION OF THIS DRAWING FOR USE IN THE PRODUCTION OF SHOP DRAWINGS OR FINAL DRAWINGS IS EXPRESSLY FORBIDDEN.

UNAUTHORIZED ALTERATION AND/OR DUPLICATION OF THIS DRAWING IS A VIOLATION OF SECTION 7209, PROVISION 2, OF THE NEW YORK STATE EDUCATION LAW.

CJS ARCHITECTS
BUFFALO | ROCHESTER
www.cjsarchitects.com

tredo ENGINEERS
CIVIL | STRUCTURAL | ENGINEERING
755 Seneca St. #202
Buffalo, NY 14210
www.tredoengineers.com

KEY PLAN N

COLD SPRING
CONSTRUCTION CO.

ADDITION & RENOVATION

43 JACKSON STREET
AKRON, NY 14001

REV. #	DESCRIPTION	DATE

JOB NO.	2103 (T.E. JOB #21-11)
SCALE	AS NOTED
ISSUE DATE	02.18.2022
DRAWN BY	MJN
CHECKED BY	MJE

THIS IS A SINGLE SHEET OF A COHESIVE SET OF CONSTRUCTION DOCUMENTS (INCLUDING DRAWINGS AND SPECIFICATIONS). INTERPRETATION OF THE INFORMATION AS PRESENTED SHOULD BE BASED ON THE ENTIRE SET OF DOCUMENTS.

DRAWING TITLE

SECTIONS and DETAILS

S-305

PERMIT SET

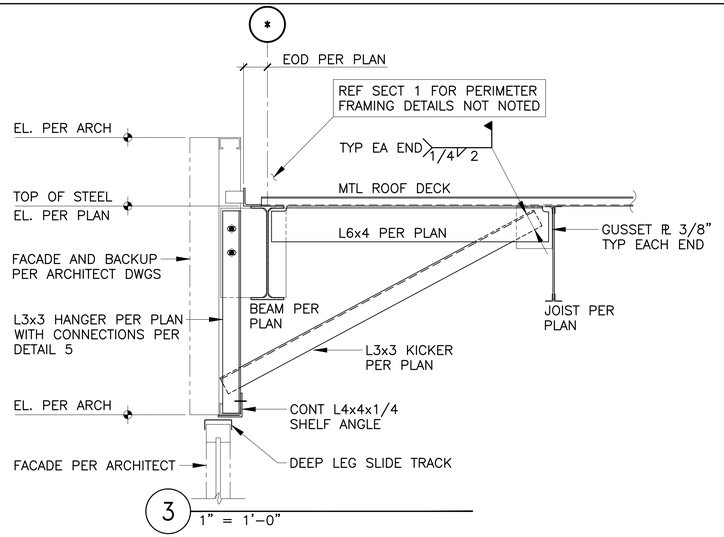

3 1" = 1'-0"

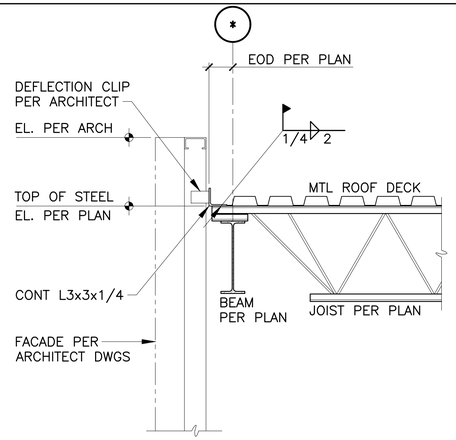

2 1" = 1'-0"

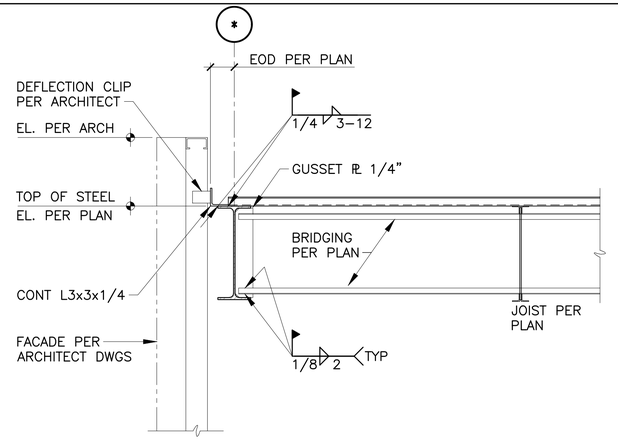

1 1" = 1'-0"

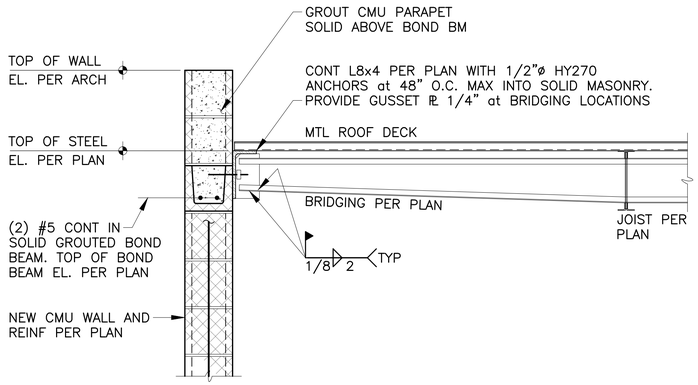

6 1" = 1'-0"

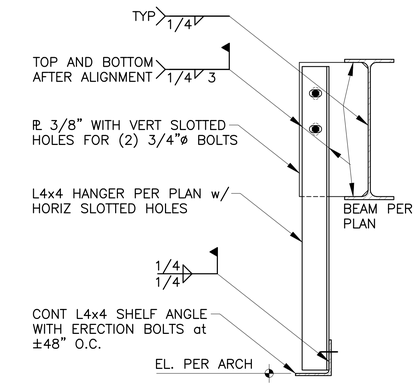

5 1 1/2" = 1'-0"

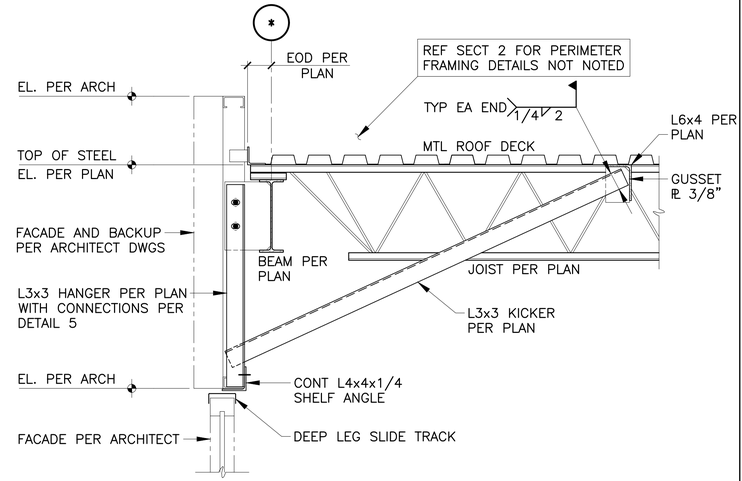

4 1" = 1'-0"

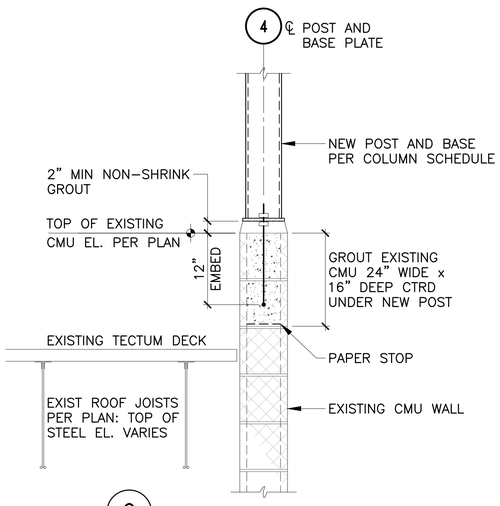

9 1" = 1'-0"

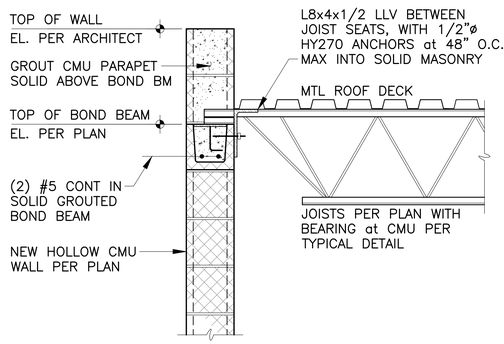

8 1" = 1'-0"

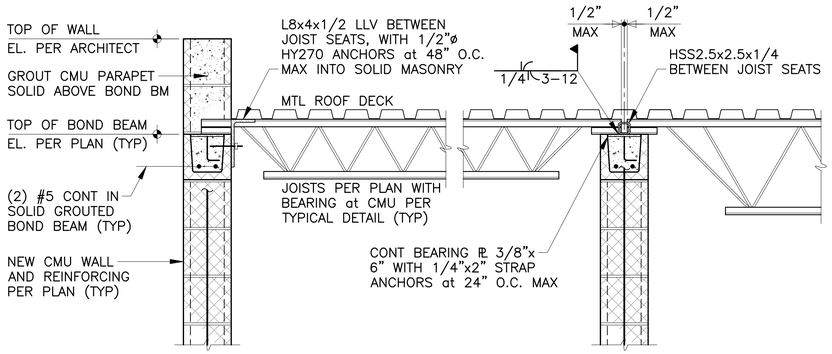

7 1" = 1'-0"

COPYRIGHT© 2022 TREDO ENGINEERS
ALL RIGHTS RESERVED. NO PART OF THIS DRAWING MAY BE REPRODUCED OR CORIED IN ANY FORM OR BY ANY MEANS WITHOUT THE WRITTEN PERMISSION OF THE ENGINEER.

REPRODUCTION OF THIS DRAWING FOR USE IN THE PRODUCTION OF SHOP AND/OR FIELD DETAIL DRAWINGS IS EXPRESSLY FORBIDDEN.

UNAUTHORIZED ALTERATION AND/OR DUPLICATION OF THIS DRAWING IS A VIOLATION OF SECTION 7209, PROVISION 2 OF THE NEW YORK STATE EDUCATION LAW.

CJS ARCHITECTS
BUFFALO | ROCHESTER
www.cjsarchitects.com

tredo ENGINEERS
CIVIL | STRUCTURAL | ENGINEERING
755 Seneca St. #202
Buffalo, NY 14210
www.tredoengineers.com

KEY PLAN N

COLD SPRING CONSTRUCTION CO.

ADDITION & RENOVATION

43 JACKSON STREET
AKRON, NY 14001

REV. #	DESCRIPTION	DATE

JOB NO.	2103 (T.E. JOB #21-11)
SCALE	AS NOTED
ISSUE DATE	02.18.2022
DRAWN BY	MJN
CHECKED BY	MJE

THIS IS A SINGLE SHEET OF A COHESIVE SET OF CONSTRUCTION DOCUMENTS (INCLUDING DRAWINGS AND SPECIFICATIONS). INTERPRETATION OF THE INFORMATION AS PRESENTED SHOULD BE BASED ON THE ENTIRE SET OF DOCUMENTS.

DRAWING TITLE

SECTIONS and DETAILS

S-306

PERMIT SET

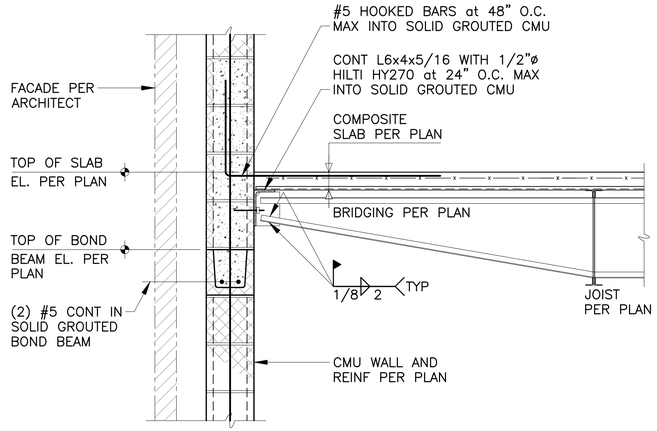

1 1" = 1'-0"

COPYRIGHT© 2022 TREDO ENGINEERS
ALL RIGHTS RESERVED. NO PART OF THIS DRAWING MAY BE REPRODUCED, OR COPIED IN ANY FORM BY ANY MEANS WITHOUT THE WRITTEN PERMISSION OF THE ENGINEER.

REPRODUCTION OF THIS DRAWING FOR USE IN THE PRODUCTION OF SHOP DRAWINGS OR DETAIL DRAWINGS IS EXPRESSLY FORBIDDEN.

UNAUTHORIZED ALTERATION AND/OR DUPLICATION OF THIS DRAWING IS A VIOLATION OF SECTION 7209, PROVISION 2, OF THE NEW YORK STATE EDUCATION LAW.

CJS ARCHITECTS
BUFFALO | ROCHESTER
www.cjsarchitects.com

tredo ENGINEERS
CIVIL | STRUCTURAL | ENGINEERING
755 Seneca St. #202
Buffalo, NY 14210
www.tredoengineers.com

KEY PLAN N

COLD SPRING
CONSTRUCTION CO.

ADDITION & RENOVATION

43 JACKSON STREET
AKRON, NY 14001

REV. #	DESCRIPTION	DATE

JOB NO.	2103 (T.E. JOB #21-11)
SCALE	AS NOTED
ISSUE DATE	02.18.2022
DRAWN BY	MJN
CHECKED BY	MJE

THIS IS A SINGLE SHEET OF A COHESIVE SET OF CONSTRUCTION DOCUMENTS (INCLUDING DRAWINGS AND SPECIFICATIONS). INTERPRETATION OF THE INFORMATION AS PRESENTED SHOULD BE BASED ON THE ENTIRE SET OF DOCUMENTS.

DRAWING TITLE

SECTIONS and DETAILS

S-307

PERMIT SET

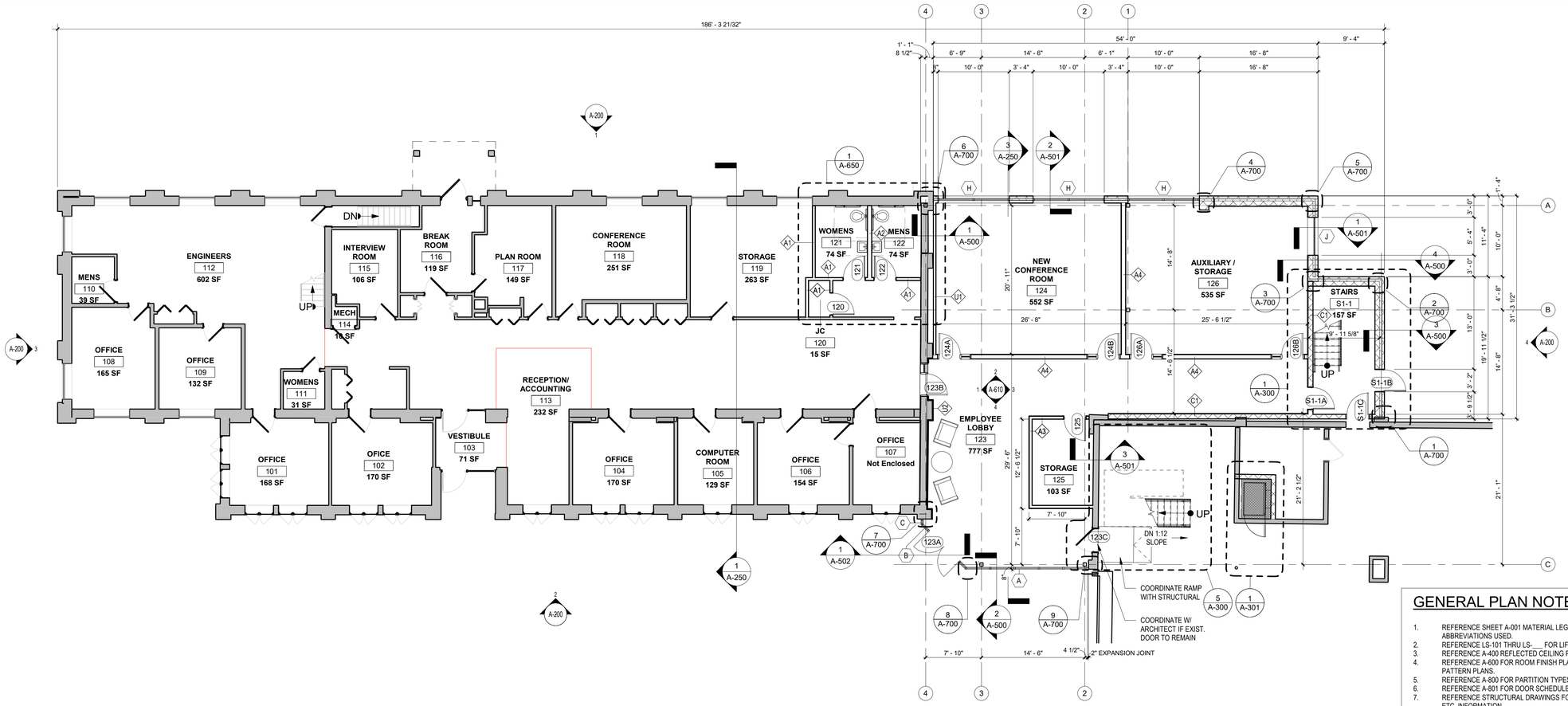

2 FIRST FLOOR PLAN
A-101 1/8" = 1'-0"

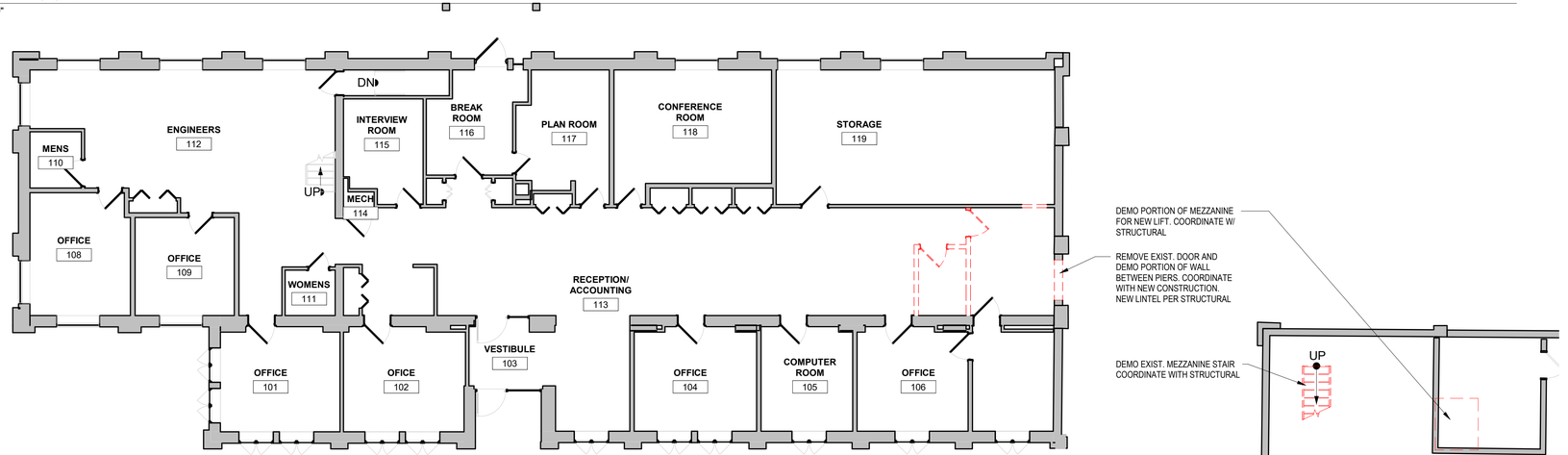

1 FIRST FLOOR DEMOLITION PLAN
A-101 1/8" = 1'-0"

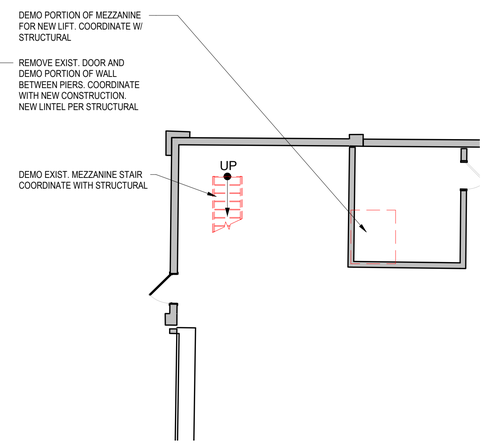

GENERAL PLAN NOTES

1. REFERENCE SHEET A-001 MATERIAL LEGEND, SYMBOL LEGEND AND ABBREVIATIONS USED.
2. REFERENCE LS-101 THRU LS-___ FOR LIFE SAFETY DRAWINGS.
3. REFERENCE A-400 REFLECTED CEILING PLAN
4. REFERENCE A-600 FOR ROOM FINISH PLAN, FINISH SCHEDULE AND FLOOR PATTERN PLANS.
5. REFERENCE A-800 FOR PARTITION TYPES.
6. REFERENCE A-801 FOR DOOR SCHEDULE.
7. REFERENCE STRUCTURAL DRAWINGS FOR UNIT MASONRY, STEEL, CONCRETE ETC. INFORMATION.
8. ALL STRUCTURE., MECH., ELEC., PLUMB. AND FIRE PROTECTION ELEMENTS SHOWN ARE FOR REFERENCE ONLY. CONTRACTOR SHALL REFER TO OTHER SECTIONS OF THE DOCUMENTS AS APPROPRIATE FOR OTHER TRADES. WHERE DISCREPANCIES EXIST BETWEEN ARCH. DRAWINGS AND OTHER TRADES CONTRACTOR SHALL NOTIFY GC OR CM & ARCHITECT PRIOR TO PERFORMING ANY WORK RELATED TO SAID DISCREPANCY.
9. REFERENCE FOOD SERVICE (FS SERIES) DRAWINGS FOR CASEWORK & EQUIPMENT. COORDINATE MEP CONNECTIONS WITH FS & MEP DRAWINGS.
10. ALL KEY PLANS ARE FOR REFERENCE ONLY.
11. REFER TO U.L. FIRE RESISTANCE DIRECTORY FOR DETAILS ON FIRE RATED WALLS, COLUMNS ENCLOSURES, FLOOR/CEILING ASSEMBLIES & CEILING/ROOF ASSEMBLIES.
12. ALL SUB-CONTRACTORS SHALL VERIFY THAT CONDITIONS PRESENT MEET STANDARD INDUSTRY ACCEPTED CRITERIA FOR ACCEPTING/PERFORMING WORK OF THEIR TRADE. IF CONDITIONS PRESENT WILL NOT FACILITATE PERFORMANCE OF THEIR WORK IN AN ACCEPTABLE FASHION, SAID CONTRACTOR SHALL BRING THE DEFICIENCIES TO THE ATTENTION OF THE CM OR GC. IF WORK PROCEEDS WITHOUT CORRECTING DEFICIENT EXISTING CONDITIONS, ANY COSTS ASSOCIATED WITH REMOVAL & REINSTALLATION OF SAID WORK WILL BE THE RESPONSIBILITY OF THE SUB-CONTRACTOR.
13. BATH ROUGH OPENINGS SHALL NOT INTERRUPT UL DESIGN OF FIRE RATED FLOOR, WALL, AND CEILING ASSEMBLIES.
14. UNLESS NOTED OTHERWISE, ALL WALLS SHALL BE CONTINUOUS TO THE UNDERSIDE OF FLOOR DECK, FIRE RATED CEILING ASSEMBLY, OR FIRE RATED CEILING/ROOF ASSEMBLY ABOVE.
15. INTERIOR DIMENSIONS ARE TO FINISHED FACE OF WALL UNLESS NOTED OTHERWISE.
16. PROVIDE DRAFTSTOPPING AT THE TOP OF ALL CONCEALED WALL CAVITIES. DRAFTSTOPPING SHALL BE OF AN BCNYS APPROVED MATERIAL AND SHALL PREVENT THE PASSAGE OF SMOKE FROM THE WALL CAVITY INTO ANY ADJACENT CEILING/FLOOR OR CEILING/ROOF CAVITIES.
17. PROVIDE FIRE RATED SOLID WOOD BLOCKING AS REINFORCING FOR ALL WALL HUNG ITEMS, INCLUDING BUT NOT LIMITED TO; HANDRAILS, GRAB BARS, FUTURE GRAB BARS, CABINETS, ELEC. PANELS, FIXTURES AND ACCESSORIES.
18. MOISTURE RESISTANT GYPSUM WALL BOARD SHALL BE PROVIDED AT ALL WET AREAS (TOILETS, KITCHENS, MOP SINKS, ETC.)
19. CORD., MECH COVERS, GRILLES, ETC. WITH MECH. DWG'S. COLORS TO BE SELECTED BY ARCHITECT FROM MANUFACTURER'S FULL RANGE, INCLUDING PREMIUM FINISHES/COLORS.
20. DOORS LOCATED IN CLOSETS OR PARTITIONS TO BE CENTERED WITHIN WALL UNLESS OTHERWISE NOTED.
21. CUSTOM PAINT ELECTRICAL PANEL BOXES IN RESIDENTIAL UNITS - MATCH ADJACENT WALL COLOR.
22. ALIGN FINISHED FACE OF WALLS WHERE DIFFERENT WALL TYPES ABUT EACH OTHER.
23. GENERAL FLOOR PLAN NOTES APPLY TO ALL FLOOR PLANS OF THIS PROJECT.
24. ALL DIMENSIONS, MATERIAL INDICATIONS AND NOTES SHOWN ON ONE DRAWING SHALL APPLY TO ALL OTHER SIMILAR DRAWINGS UNLESS OTHERWISE NOTED.
25. VERIFY ALL DIMENSIONED CONDITIONS IN THE FIELD PRIOR TO SHOP DRAWING SUBMITTAL/FABRICATION/CONSTRUCTION. WHEN DIMENSIONS AND/OR CONDITIONS AS INDICATED ON THE DRAWINGS CONFLICT WITH ACTUAL, CONTACT THE ARCHITECT IN WRITING FOR CLARIFICATION.
26. FOR THOSE EXISTING FINISHES DAMAGED OR EXPOSED DURING DEMOLITION, PATCH & REPAIR ALL EXISTING FINISHES TO REMAIN AND MATCH THEM TO EXISTING ADJACENT CONDITIONS . FINISH AND REPAIR SHALL RESTORE CONTINUITY OF EXISTING ADJACENT FINISH. PROVIDE NEW MATERIALS WHERE MISSING OR WHERE CONTINUITY OF FINISH CANNOT BE ACHIEVED BY REPAIR.
27. REPLACE SALVAGED SIGNAGE, ARTWORK, DISPLAY BOARDS AND OTHER ASSOCIATED WALL MOUNTED CLASSROOM EQUIPMENT REMOVED DURING DEMOLITION. LOCATIONS WHERE DIRECTED BY ARCHITECT.
28. FOR DRAWING CLARITY, NOT ALL SLAB INFILLS HAVE BEEN SHOWN. SLAB INFILLS CORRESPOND SLAB REMOVAL REGIONS IN THE DEMOLITION DRAWINGS . REF. STRUCTURAL DRAWINGS FOR NEW WORK REQUIREMENTS.

CJS ARCHITECTS
BUFFALO | ROCHESTER
www.cjsarchitects.com

PERMIT SET

FLINT AVE.
JACKSON ST.
KEY PLAN
N

COLD SPRING CONSTRUCTION CO.

ADDITION & RENOVATION

43 JACKSON ST.
AKRON, NY14001

REV. #	DESCRIPTION	DATE

JOB NO.	2103
SCALE	As indicated
ISSUE DATE	02/17/22
DRAWN BY	NAT
CHECKED BY	JMC

THIS IS A SINGLE SHEET OF A COHESIVE SET OF CONSTRUCTION DOCUMENTS (INCLUDING DRAWINGS AND SPECIFICATIONS). INTERPRETATION OF THE INFORMATION AS PRESENTED SHOULD BE BASED ON THE ENTIRE SET OF DOCUMENTS.

DRAWING TITLE

FIRST FLOOR PLAN

A-101

PERMIT SET

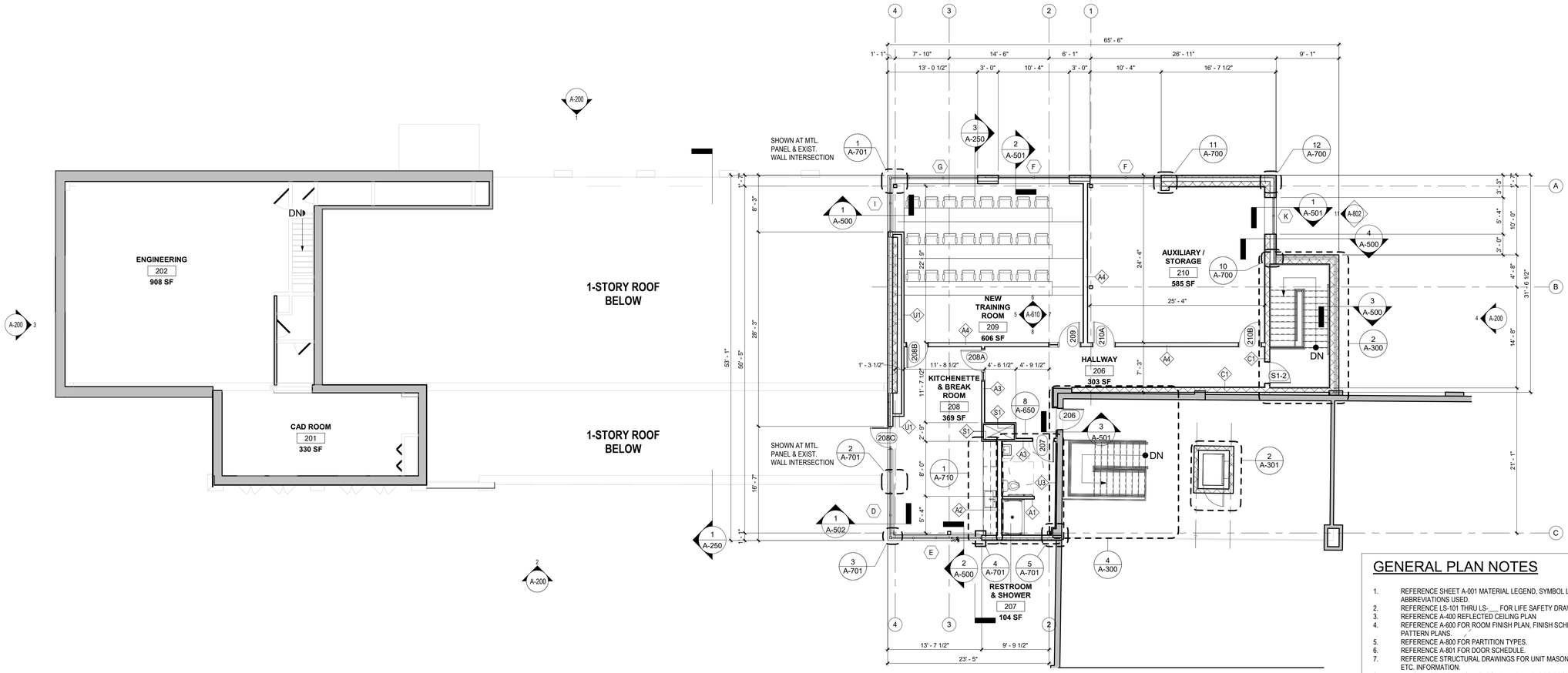

1 A-102 SECOND FLOOR PLAN
1/8" = 1'-0"

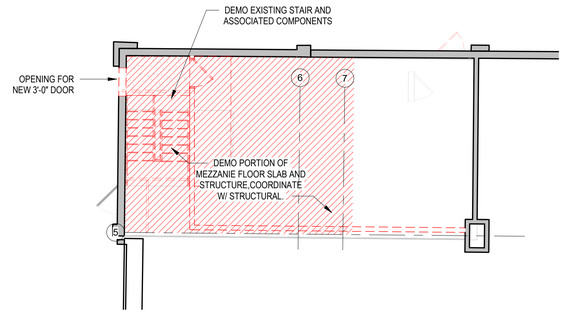

2 A-102 SECOND FLOOR DEMOLITION PLAN
1/8" = 1'-0"

GENERAL PLAN NOTES

1. REFERENCE SHEET A-001 MATERIAL LEGEND, SYMBOL LEGEND AND ABBREVIATIONS USED.
2. REFERENCE LS-101 THRU LS-___ FOR LIFE SAFETY DRAWINGS.
3. REFERENCE A-400 REFLECTED CEILING PLAN
4. REFERENCE A-600 FOR ROOM FINISH PLAN, FINISH SCHEDULE AND FLOOR PATTERN PLANS.
5. REFERENCE A-800 FOR PARTITION TYPES.
6. REFERENCE A-801 FOR DOOR SCHEDULE.
7. REFERENCE STRUCTURAL DRAWINGS FOR UNIT MASONRY, STEEL, CONCRETE ETC. INFORMATION.
8. ALL STRUCTURE., MECH., ELEC., PLUMB. AND FIRE PROTECTION ELEMENTS SHOWN ARE FOR REFERENCE ONLY. CONTRACTOR SHALL REFER TO OTHER SECTIONS OF THE DOCUMENTS AS APPROPRIATE FOR OTHER TRADES. WHERE DISCREPANCIES EXIST BETWEEN ARCH. DRAWINGS AND OTHER TRADES CONTRACTOR SHALL NOTIFY GC OR CM & ARCHITECT PRIOR TO PERFORMING ANY WORK RELATED TO SAID DISCREPANCY.
9. REFERENCE FOOD SERVICE (FS SERIES) DRAWINGS FOR CASEWORK & EQUIPMENT. COORDINATE MEP CONNECTIONS WITH FS & MEP DRAWINGS.
10. ALL KEY PLANS ARE FOR REFERENCE ONLY.
11. REFER TO U.L. FIRE RESISTANCE DIRECTORY FOR DETAILS ON FIRE RATED WALLS, COLUMNS ENCLOSURES, FLOOR/CEILING ASSEMBLIES & CEILING/ROOF ASSEMBLIES.
12. ALL SUB-CONTRACTORS SHALL VERIFY THAT CONDITIONS PRESENT MEET STANDARD INDUSTRY ACCEPTED CRITERIA FOR ACCEPTING/PERFORMING WORK OF THEIR TRADE. IF CONDITIONS PRESENT WILL NOT FACILITATE PERFORMANCE OF THEIR WORK IN AN ACCEPTABLE FASHION, SAID CONTRACTOR SHALL BRING THE DEFICIENCIES TO THE ATTENTION OF THE CM OR GC. IF WORK PROCEEDS WITHOUT CORRECTING DEFICIENT EXISTING CONDITIONS, ANY COSTS ASSOCIATED WITH REMOVAL & REINSTALLATION OF SAID WORK WILL BE THE RESPONSIBILITY OF THE SUB-CONTRACTOR.
13. BATH ROUGH OPENINGS SHALL NOT INTERRUPT UL DESIGN OF FIRE RATED FLOOR, WALL, AND CEILING ASSEMBLIES.
14. UNLESS NOTED OTHERWISE, ALL WALLS SHALL BE CONTINUOUS TO THE UNDERSIDE OF FLOOR DECK, FIRE RATED CEILING ASSEMBLY, OR FIRE RATED CEILING/ROOF ASSEMBLY ABOVE.
15. INTERIOR DIMENSIONS ARE TO FINISHED FACE OF WALL UNLESS NOTED OTHERWISE.
16. PROVIDE DRAFTSTOPPING AT THE TOP OF ALL CONCEALED WALL CAVITIES. DRAFTSTOPPING SHALL BE OF AN BCNYS APPROVED MATERIAL AND SHALL PREVENT THE PASSAGE OF SMOKE FROM THE WALL CAVITY INTO ANY ADJACENT CEILING/FLOOR OR CEILING/ROOF CAVITIES.
17. PROVIDE FIRE RATED SOLID WOOD BLOCKING AS REINFORCING FOR ALL WALL HUNG ITEMS, INCLUDING BUT NOT LIMITED TO; HANDRAILS, GRAB BARS, FUTURE GRAB BARS, CABINETS, ELEC. PANELS, FIXTURES AND ACCESSORIES.
18. MOISTURE RESISTANT GYPSUM WALL BOARD SHALL BE PROVIDED AT ALL WET AREAS (TOILETS, KITCHENS, MOP SINKS, ETC.)
19. CORD., MECH COVERS, GRILLES, ETC. WITH MECH. DWG'S. COLORS TO BE SELECTED BY ARCHITECT FROM MANUFACTURER'S FULL RANGE, INCLUDING PREMIUM FINISHES/COLORS.
20. DOORS LOCATED IN CLOSETS OR PARTITIONS TO BE CENTERED WITHIN WALL UNLESS OTHERWISE NOTED.
21. CUSTOM PAINT ELECTRICAL PANEL BOXES IN RESIDENTIAL UNITS - MATCH ADJACENT WALL COLOR.
22. ALIGN FINISHED FACE OF WALLS WHERE DIFFERENT WALL TYPES ABUT EACH OTHER.
23. GENERAL FLOOR PLAN NOTES APPLY TO ALL FLOOR PLANS OF THIS PROJECT.
24. ALL DIMENSIONS, MATERIAL INDICATIONS AND NOTES SHOWN ON ONE DRAWING SHALL APPLY TO ALL OTHER SIMILAR DRAWINGS UNLESS OTHERWISE NOTED.
25. VERIFY ALL DIMENSIONED CONDITIONS IN THE FIELD PRIOR TO SHOP DRAWING SUBMITTAL/FABRICATION/CONSTRUCTION. WHEN DIMENSIONS AND/OR CONDITIONS AS INDICATED ON THE DRAWINGS CONFLICT WITH ACTUAL, CONTACT THE ARCHITECT IN WRITING FOR CLARIFICATION.
26. FOR THOSE EXISTING FINISHES DAMAGED OR EXPOSED DURING DEMOLITION, PATCH & REPAIR ALL EXISTING FINISHES TO REMAIN AND MATCH THEM TO EXISTING ADJACENT CONDITIONS . FINISH AND REPAIR SHALL RESTORE CONTINUITY OF EXISTING ADJACENT FINISH. PROVIDE NEW MATERIALS WHERE MISSING OR WHERE CONTINUITY OF FINISH CANNOT BE ACHIEVED BY REPAIR.
27. REPLACE SALVAGED SIGNAGE, ARTWORK, DISPLAY BOARDS AND OTHER ASSOCIATED WALL MOUNTED CLASSROOM EQUIPMENT REMOVED DURING DEMOLITION. LOCATIONS WHERE DIRECTED BY ARCHITECT.
28. FOR DRAWING CLARITY, NOT ALL SLAB INFILLS HAVE BEEN SHOWN. SLAB INFILLS CORRESPOND SLAB REMOVAL REGIONS IN THE DEMOLITION DRAWINGS . REF. STRUCTURAL DRAWINGS FOR NEW WORK REQUIREMENTS.

CJS ARCHITECTS
BUFFALO | ROCHESTER
www.cjsarchitects.com

PERMIT SET

FLINT AVE.

JACKSON ST.

KEY PLAN

N

COLD SPRING CONSTRUCTION CO.

ADDITION & RENOVATION

43 JACKSON ST.
AKRON, NY14001

REV. #	DESCRIPTION	DATE

JOB NO.	2103
SCALE	As indicated
ISSUE DATE	02/17/22
DRAWN BY	NAT
CHECKED BY	JMC

THIS IS A SINGLE SHEET OF A COHESIVE SET OF CONSTRUCTION DOCUMENTS (INCLUDING DRAWINGS AND SPECIFICATIONS). INTERPRETATION OF THE INFORMATION AS PRESENTED SHOULD BE BASED ON THE ENTIRE SET OF DOCUMENTS.

DRAWING TITLE

SECOND FLOOR PLAN

A-102

PERMIT SET

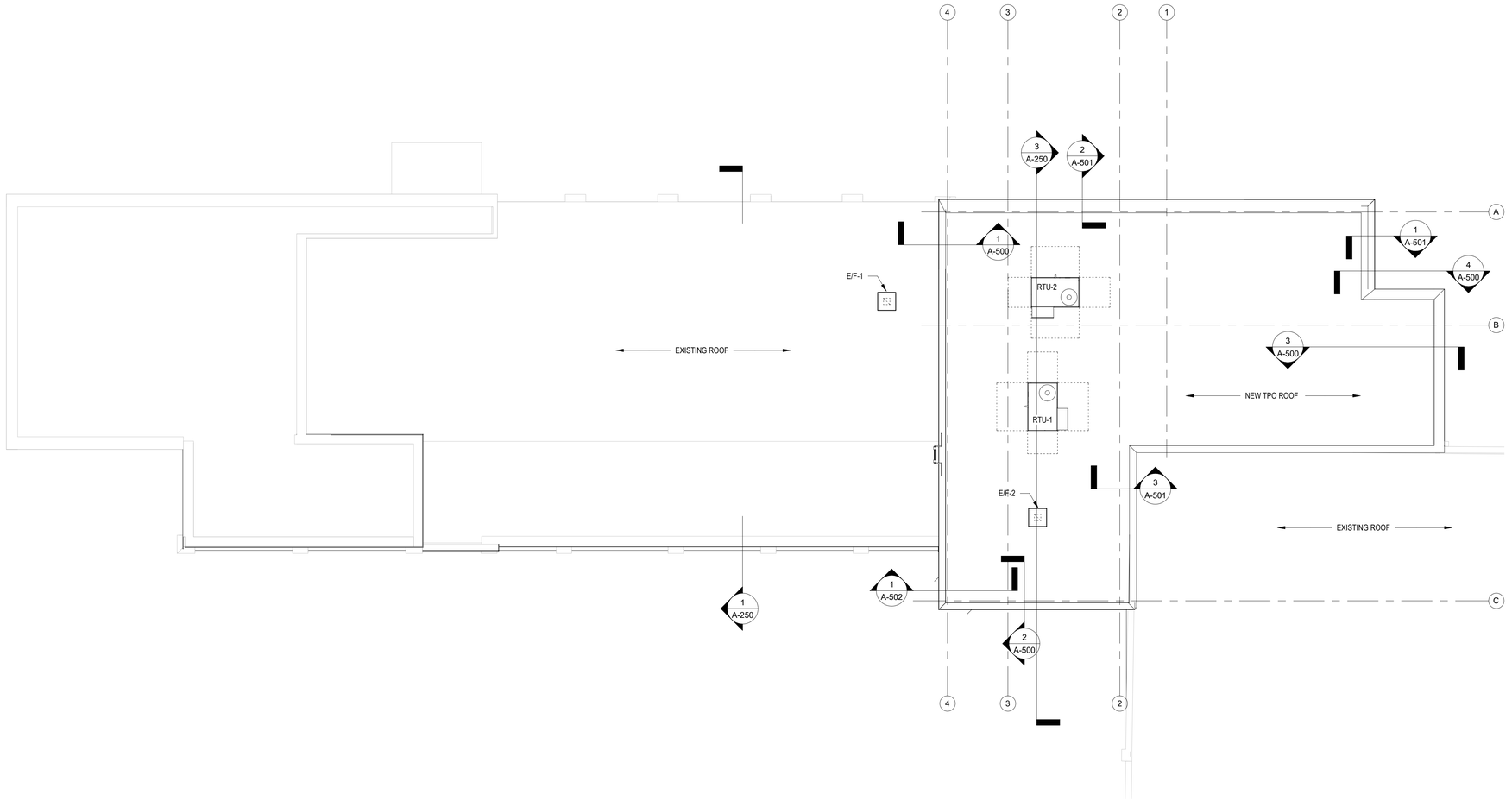

GENERAL PLAN NOTES

1. REFERENCE SHEET A-001 MATERIAL LEGEND, SYMBOL LEGEND AND ABBREVIATIONS USED.
2. REFERENCE LS-101 THRU LS-___ FOR LIFE SAFETY DRAWINGS.
3. REFERENCE A-400 REFLECTED CEILING PLAN
4. REFERENCE A-600 FOR ROOM FINISH PLAN, FINISH SCHEDULE AND FLOOR PATTERN PLANS.
5. REFERENCE A-800 FOR PARTITION TYPES.
6. REFERENCE A-801 FOR DOOR SCHEDULE.
7. REFERENCE STRUCTURAL DRAWINGS FOR UNIT MASONRY, STEEL, CONCRETE ETC. INFORMATION.
8. ALL STRUCTURE., MECH., ELEC., PLUMB. AND FIRE PROTECTION ELEMENTS SHOWN ARE FOR REFERENCE ONLY. CONTRACTOR SHALL REFER TO OTHER SECTIONS OF THE DOCUMENTS AS APPROPRIATE FOR OTHER TRADES. WHERE DISCREPANCIES EXIST BETWEEN ARCH. DRAWINGS AND OTHER TRADES CONTRACTOR SHALL NOTIFY GC OR CM & ARCHITECT PRIOR TO PERFORMING ANY WORK RELATED TO SAID DISCREPANCY.
9. REFERENCE FOOD SERVICE (FS SERIES) DRAWINGS FOR CASEWORK & EQUIPMENT. COORDINATE MEP CONNECTIONS WITH FS & MEP DRAWINGS.
10. ALL KEY PLANS ARE FOR REFERENCE ONLY.
11. REFER TO U.L. FIRE RESISTANCE DIRECTORY FOR DETAILS ON FIRE RATED WALLS, COLUMNS ENCLOSURES, FLOOR/CEILING ASSEMBLIES & CEILING/ROOF ASSEMBLIES.
12. ALL SUB-CONTRACTORS SHALL VERIFY THAT CONDITIONS PRESENT MEET STANDARD INDUSTRY ACCEPTED CRITERIA FOR ACCEPTING/PERFORMING WORK OF THEIR TRADE. IF CONDITIONS PRESENT WILL NOT FACILITATE PERFORMANCE OF THEIR WORK IN AN ACCEPTABLE FASHION, SAID CONTRACTOR SHALL BRING THE DEFICIENCIES TO THE ATTENTION OF THE CM OR GC. IF WORK PROCEEDS WITHOUT CORRECTING DEFICIENT EXISTING CONDITIONS, ANY COSTS ASSOCIATED WITH REMOVAL & REINSTALLATION OF SAID WORK WILL BE THE RESPONSIBILITY OF THE SUB-CONTRACTOR.
13. BATH ROUGH OPENINGS SHALL NOT INTERRUPT UL DESIGN OF FIRE RATED FLOOR, WALL, AND CEILING ASSEMBLIES.
14. UNLESS NOTED OTHERWISE, ALL WALLS SHALL BE CONTINUOUS TO THE UNDERSIDE OF FLOOR DECK, FIRE RATED CEILING ASSEMBLY, OR FIRE RATED CEILING/ROOF ASSEMBLY ABOVE.
15. INTERIOR DIMENSIONS ARE TO FINISHED FACE OF WALL UNLESS NOTED OTHERWISE.
16. PROVIDE DRAFTSTOPPING AT THE TOP OF ALL CONCEALED WALL CAVITIES. DRAFTSTOPPING SHALL BE OF AN BCNYS APPROVED MATERIAL AND SHALL PREVENT THE PASSAGE OF SMOKE FROM THE WALL CAVITY INTO ANY ADJACENT CEILING/FLOOR OR CEILING/ROOF CAVITIES.
17. PROVIDE FIRE RATED SOLID WOOD BLOCKING AS REINFORCING FOR ALL WALL HUNG ITEMS, INCLUDING BUT NOT LIMITED TO, HANDRAILS, GRAB BARS, FUTURE GRAB BARS, CABINETS, ELEC. PANELS, FIXTURES AND ACCESSORIES.
18. MOISTURE RESISTANT GYPSUM WALL BOARD SHALL BE PROVIDED AT ALL WET AREAS (TOILETS, KITCHENS, MOP SINKS, ETC.)
19. CORD., MECH COVERS, GRILLES, ETC. WITH MECH. DWG'S. COLORS TO BE SELECTED BY ARCHITECT FROM MANUFACTURER'S FULL RANGE, INCLUDING PREMIUM FINISHES/COLORS.
20. DOORS LOCATED IN CLOSETS OR PARTITIONS TO BE CENTERED WITHIN WALL UNLESS OTHERWISE NOTED.
21. CUSTOM PAINT ELECTRICAL PANEL BOXES IN RESIDENTIAL UNITS - MATCH ADJACENT WALL COLOR.
22. ALIGN FINISHED FACE OF WALLS WHERE DIFFERENT WALL TYPES ABUT EACH OTHER.
23. GENERAL FLOOR PLAN NOTES APPLY TO ALL FLOOR PLANS OF THIS PROJECT.
24. ALL DIMENSIONS, MATERIAL INDICATIONS AND NOTES SHOWN ON ONE DRAWING SHALL APPLY TO ALL OTHER SIMILAR DRAWINGS UNLESS OTHERWISE NOTED.
25. VERIFY ALL DIMENSIONED CONDITIONS IN THE FIELD PRIOR TO SHOP DRAWING SUBMITTAL/FABRICATION/CONSTRUCTION. WHEN DIMENSIONS AND/OR CONDITIONS AS INDICATED ON THE DRAWINGS CONFLICT WITH ACTUAL, CONTACT THE ARCHITECT IN WRITING FOR CLARIFICATION.
26. FOR THOSE EXISTING FINISHES DAMAGED OR EXPOSED DURING DEMOLITION, PATCH & REPAIR ALL EXISTING FINISHES TO REMAIN AND MATCH THEM TO EXISTING ADJACENT CONDITIONS . FINISH AND REPAIR SHALL RESTORE CONTINUITY OF EXISTING ADJACENT FINISH. PROVIDE NEW MATERIALS WHERE MISSING OR WHERE CONTINUITY OF FINISH CANNOT BE ACHIEVED BY REPAIR.
27. REPLACE SALVAGED SIGNAGE, ARTWORK, DISPLAY BOARDS AND OTHER ASSOCIATED WALL MOUNTED CLASSROOM EQUIPMENT REMOVED DURING DEMOLITION. LOCATIONS WHERE DIRECTED BY ARCHITECT.
28. FOR DRAWING CLARITY, NOT ALL SLAB INFILLS HAVE BEEN SHOWN. SLAB INFILLS CORRESPOND SLAB REMOVAL REGIONS IN THE DEMOLITION DRAWINGS . REF. STRUCTURAL DRAWINGS FOR NEW WORK REQUIREMENTS.

CJS ARCHITECTS
BUFFALO | ROCHESTER
www.cjsarchitects.com

PERMIT SET

FLINT AVE.

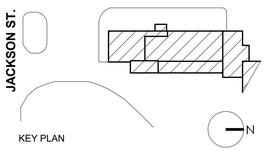

KEY PLAN

COLD SPRING
CONSTRUCTION CO.

ADDITION & RENOVATION

43 JACKSON ST.
AKRON, NY14001

REV. #	DESCRIPTION	DATE

JOB NO.	2103
SCALE	As indicated
ISSUE DATE	02/17/22
DRAWN BY	NAT
CHECKED BY	JMC

THIS IS A SINGLE SHEET OF A COHESIVE SET OF CONSTRUCTION DOCUMENTS (INCLUDING DRAWINGS AND SPECIFICATIONS). INTERPRETATION OF THE INFORMATION AS PRESENTED SHOULD BE BASED ON THE ENTIRE SET OF DOCUMENTS.

DRAWING TITLE

ROOF PLAN

A-103

PERMIT SET

MATERIALS LEGEND

1. METAL PANEL, BASIS OF DESIGN CENTRIA INTERCEPT SERIES
2. GROUND FACE BLOCK FINISH
3. FORMED METAL COPING SYSTEM
4. ALUMINUM COMPOSITE METAL CANOPY
5. EXTRUDED ALUMINUM STOREFRONT FRAMING SYSTEM WITH 1 IN INSULATED GLASS PANEL (CLEAR, LOW-E COATING); BASIS OF DESIGN: KAWNEER.
6. EXTRUDED ALUMINUM STOREFRONT FRAMING SYSTEM WITH 1 IN INSULATED GLASS PANEL (SPANDREL, LOW-E COATING); BASIS OF DESIGN: KAWNEER.
7. MASONRY AND STUCCO FINISH TO MATCH EXISTING
8. EXTERIOR ACCESS DOOR

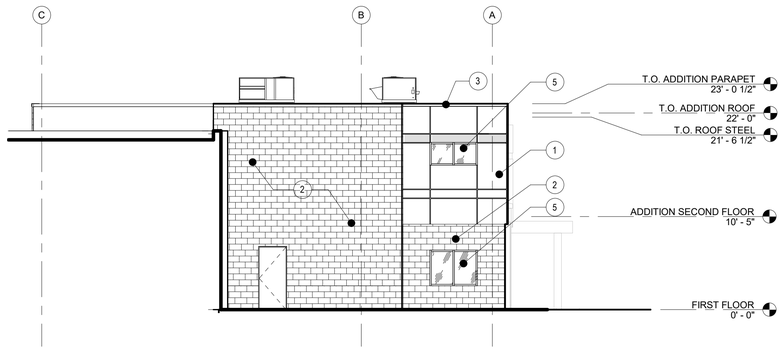

4 NORTH ELEVATION
A-200 1/8" = 1'-0"

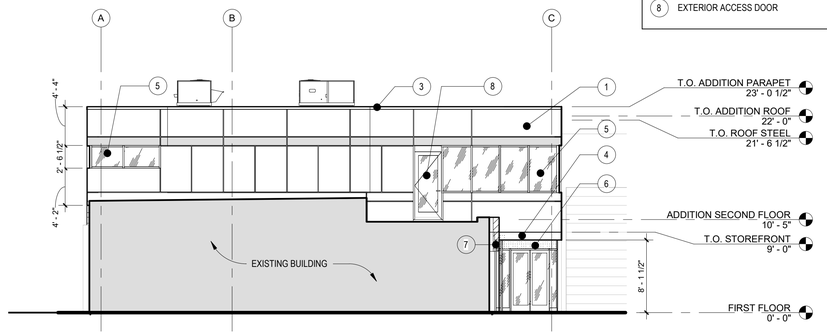

3 SOUTH ELEVATION
A-200 1/8" = 1'-0"

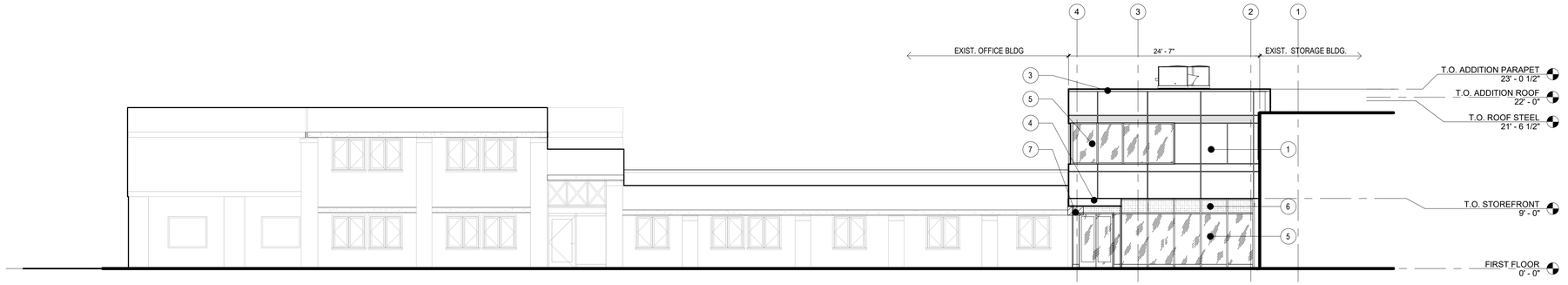

2 EAST ELEVATION
A-200 1/8" = 1'-0"

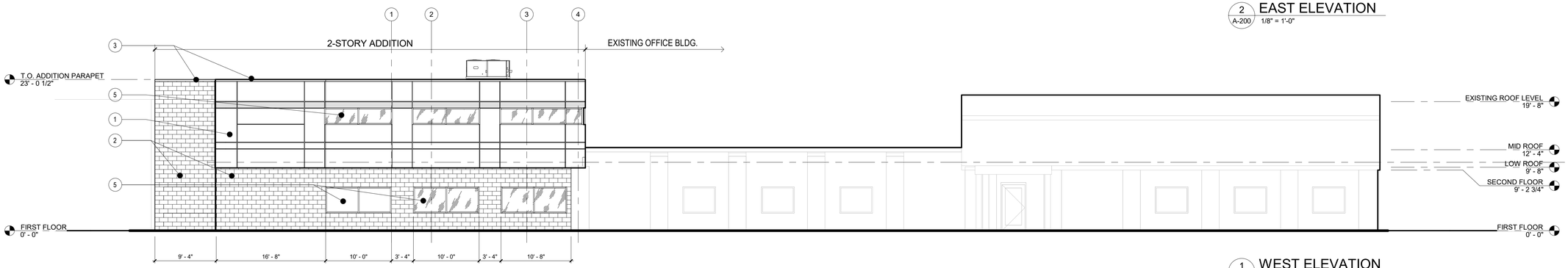

1 WEST ELEVATION
A-200 1/8" = 1'-0"

CJS ARCHITECTS
BUFFALO | ROCHESTER
www.cjsarchitects.com

PERMIT SET

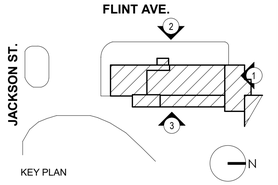

KEY PLAN

COLD SPRING CONSTRUCTION CO.

ADDITION & RENOVATION

43 JACKSON ST.
AKRON, NY14001

REV. #	DESCRIPTION	DATE

JOB NO.	2103
SCALE	As indicated
ISSUE DATE	02/17/22
DRAWN BY	NAT
CHECKED BY	JMC

THIS IS A SINGLE SHEET OF A COHESIVE SET OF CONSTRUCTION DOCUMENTS (INCLUDING DRAWINGS AND SPECIFICATIONS). INTERPRETATION OF THE INFORMATION AS PRESENTED SHOULD BE BASED ON THE ENTIRE SET OF DOCUMENTS.

DRAWING TITLE

EXTERIOR ELEVATIONS

A-200

PERMIT SET

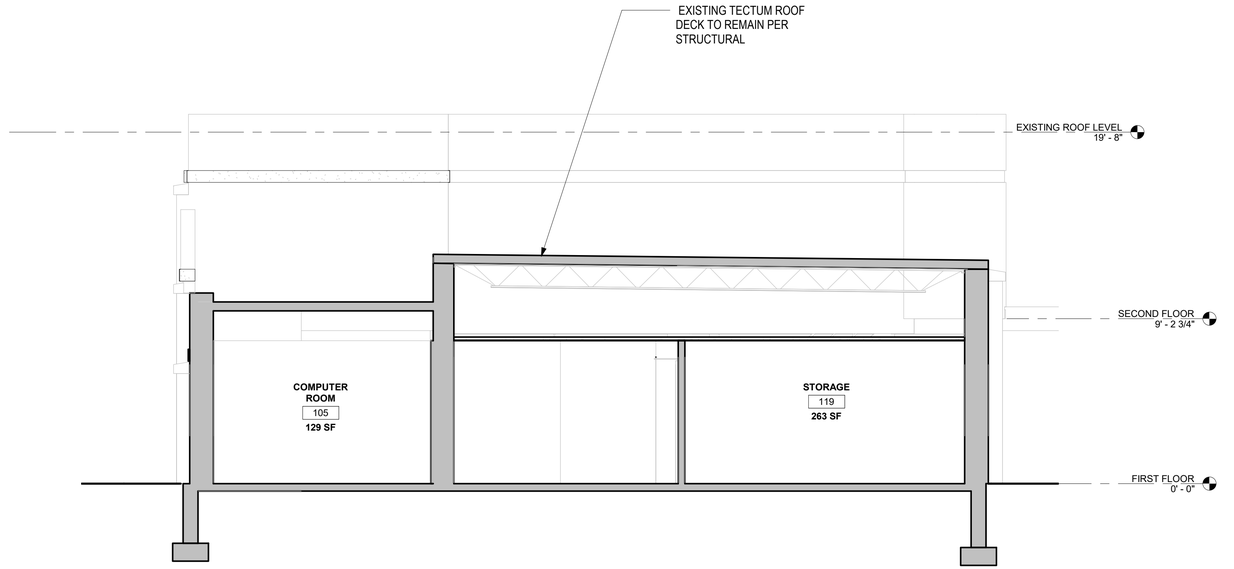

1 / A-250 E-W SECTION EXIST. BUILDING
1/4" = 1'-0"

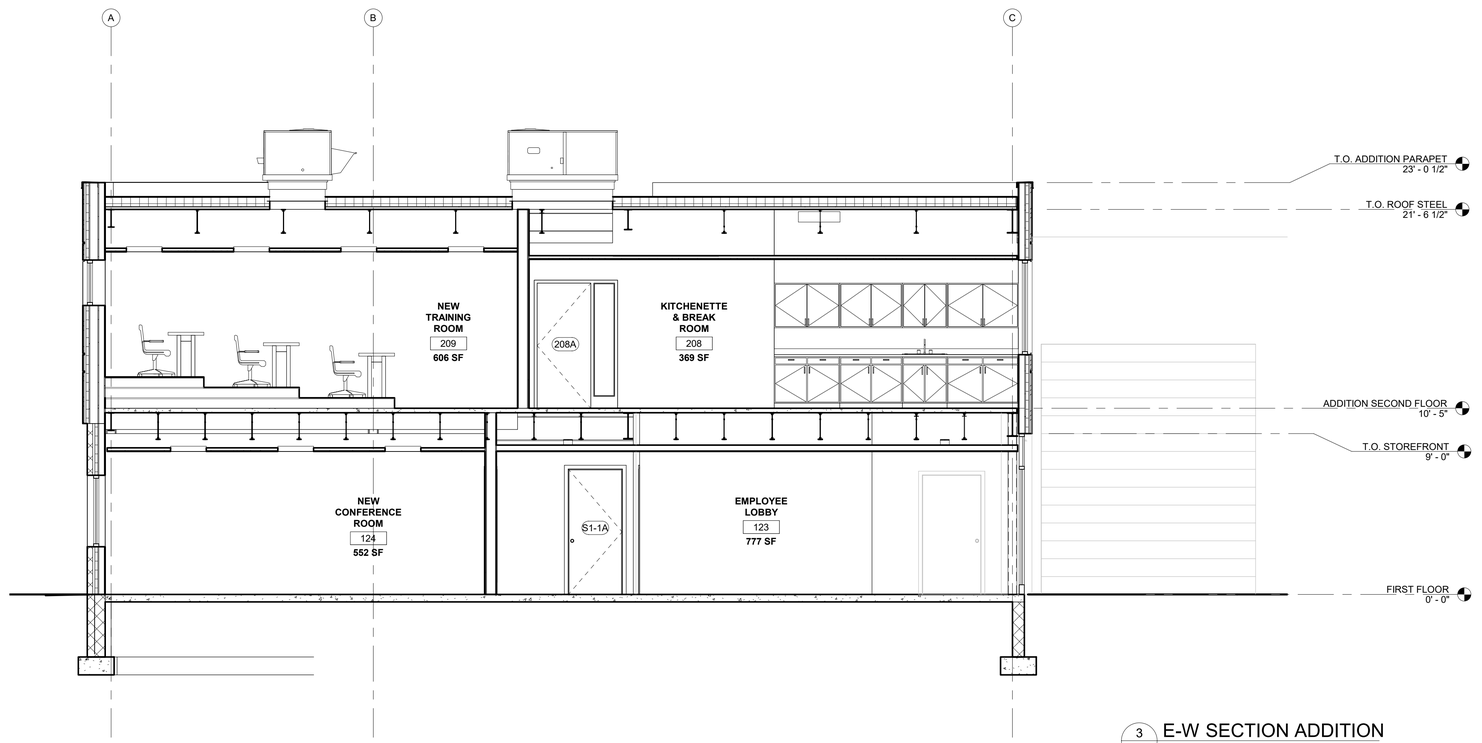

3 / A-250 E-W SECTION ADDITION
1/4" = 1'-0"

CJS ARCHITECTS
BUFFALO | ROCHESTER
www.cjsarchitects.com

PERMIT SET

FLINT AVE.

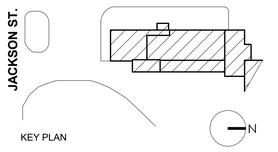

KEY PLAN

COLD SPRING CONSTRUCTION CO.

ADDITION & RENOVATION

43 JACKSON ST.
AKRON, NY14001

REV. #	DESCRIPTION	DATE

JOB NO.	2103
SCALE	1/4" = 1'-0"
ISSUE DATE	02/17/22
DRAWN BY	NAT
CHECKED BY	JMC

THIS IS A SINGLE SHEET OF A COHESIVE SET OF CONSTRUCTION DOCUMENTS (INCLUDING DRAWINGS AND SPECIFICATIONS). INTERPRETATION OF THE INFORMATION AS PRESENTED SHOULD BE BASED ON THE ENTIRE SET OF DOCUMENTS.

DRAWING TITLE

BUILDING SECTIONS

A-250

PERMIT SET

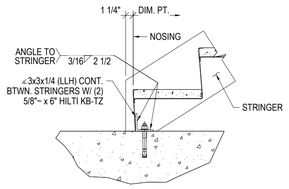

CONNECTION TO CONCRETE SLAB WITH ANCHOR

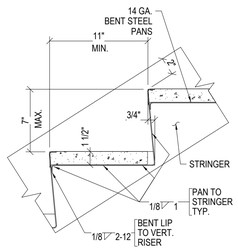

TREAD / RISER CONSTRUCTION

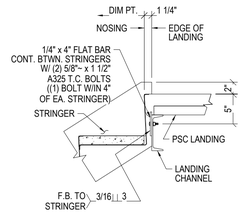

STANDARD TOP CONNECTION TO STEEL LANDING

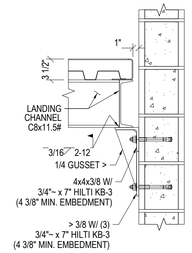

LEDGER ANGLE CONNECTION TO CMU WALL WITH ANCHOR

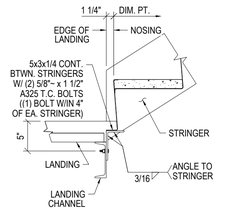

STANDARD BOTTOM CONNECTION TO STEEL LANDING

7 A-300 STAIR DETAILS - CONCRETE FILLED METAL PAN

1" = 1'-0"

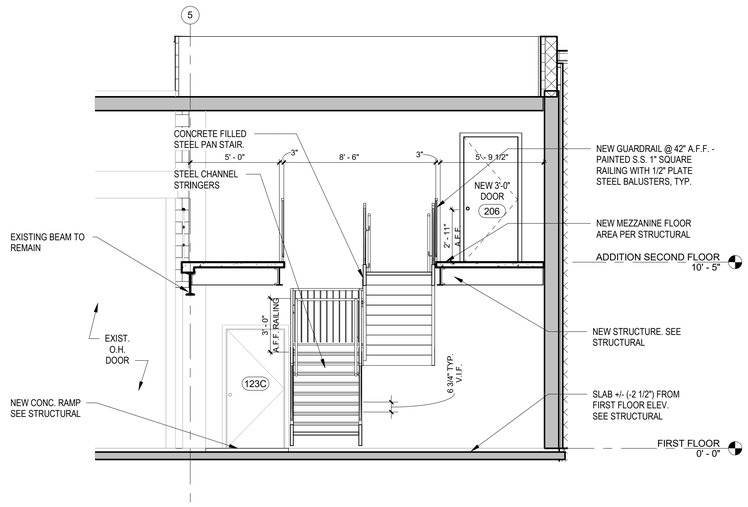

6 A-300 MEZZANINE STAIR SECTION

1/4" = 1'-0"

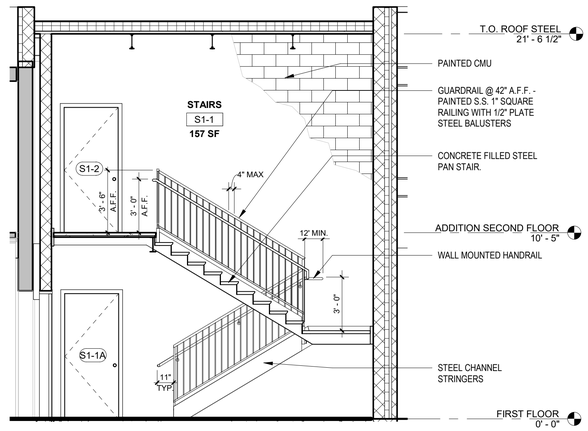

3 A-300 ADDITION STAIR SECTION

1/4" = 1'-0"

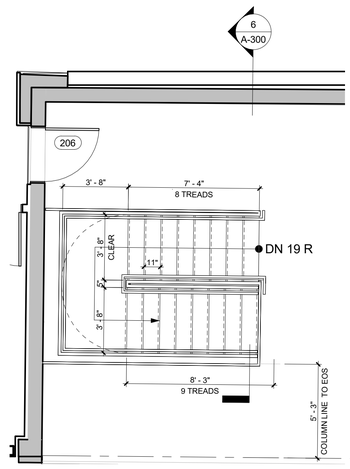

4 A-300 SECOND FLOOR MEZZANINE STAIR

1/4" = 1'-0"

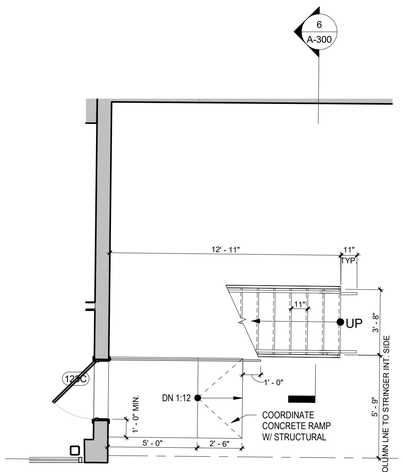

5 A-300 FIRST FLOOR MEZZANINE STAIR

1/4" = 1'-0"

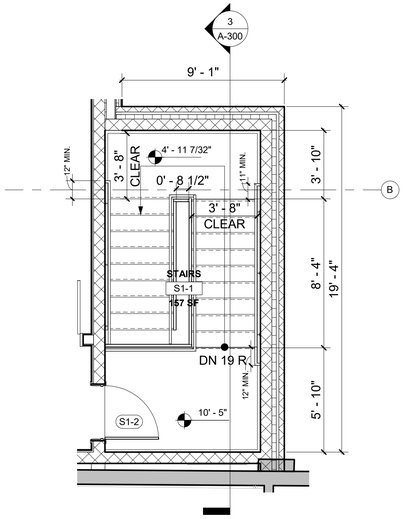

2 A-300 ADDITION STAIR 2ND FLOOR PLAN

1/4" = 1'-0"

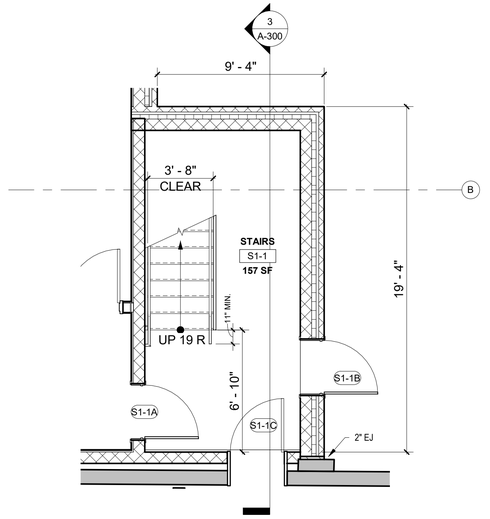

1 A-300 ADDITION STAIR 1ST FLOOR PLAN

1/4" = 1'-0"

CJS ARCHITECTS
BUFFALO | ROCHESTER
www.cjsarchitects.com

PERMIT SET

FLINT AVE.

JACKSON ST.

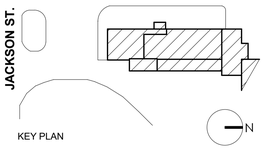

COLD SPRING CONSTRUCTION CO.

ADDITION & RENOVATION

43 JACKSON ST.
AKRON, NY14001

REV. #	DESCRIPTION	DATE

JOB NO.	2103
SCALE	As indicated
ISSUE DATE	02/17/22
DRAWN BY	NAT
CHECKED BY	JMC

THIS IS A SINGLE SHEET OF A COHESIVE SET OF CONSTRUCTION DOCUMENTS (INCLUDING DRAWINGS AND SPECIFICATIONS). INTERPRETATION OF THE INFORMATION AS PRESENTED SHOULD BE BASED ON THE ENTIRE SET OF DOCUMENTS.

DRAWING TITLE

VERTICAL CIRCULATION

A-300

PERMIT SET

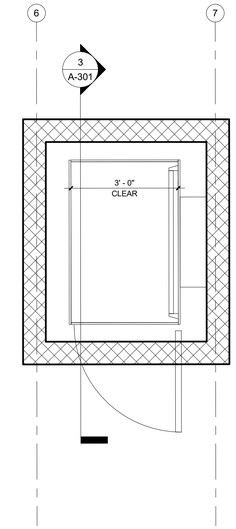

2 A-301 SECOND FLOOR LIFT
1/2" = 1'-0"

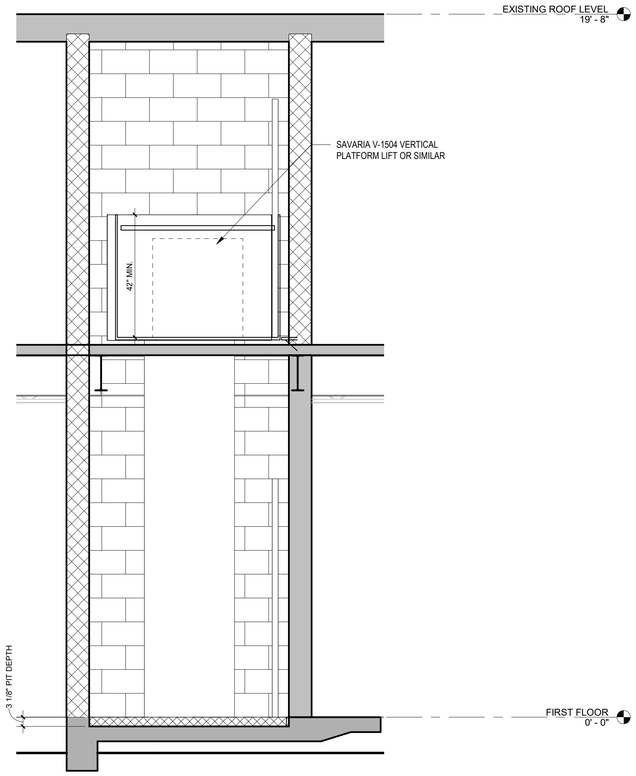

3 A-301 SECTION THROUGH LIFT
1/2" = 1'-0"

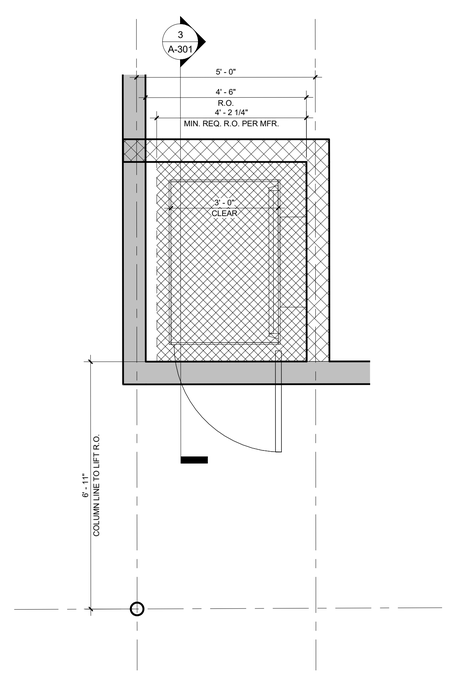

1 A-301 FIRST FLOOR LIFT
1/2" = 1'-0"

CJS ARCHITECTS
BUFFALO | ROCHESTER
www.cjsarchitects.com

PERMIT SET

FLINT AVE.

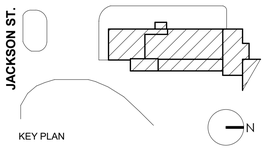

KEY PLAN

COLD SPRING
CONSTRUCTION CO.

ADDITION & RENOVATION

43 JACKSON ST.
AKRON, NY14001

REV. #	DESCRIPTION	DATE

JOB NO.	2103
SCALE	1/2" = 1'-0"
ISSUE DATE	02/17/22
DRAWN BY	NAT
CHECKED BY	JMC

THIS IS A SINGLE SHEET OF A COHESIVE
SET OF CONSTRUCTION DOCUMENTS
(INCLUDING DRAWINGS AND SPECIFICATIONS).
INTERPRETATION OF THE INFORMATION
AS PRESENTED SHOULD BE BASED ON
THE ENTIRE SET OF DOCUMENTS.

DRAWING TITLE

VERTICAL CIRCULATION LIFT

A-301

PERMIT SET

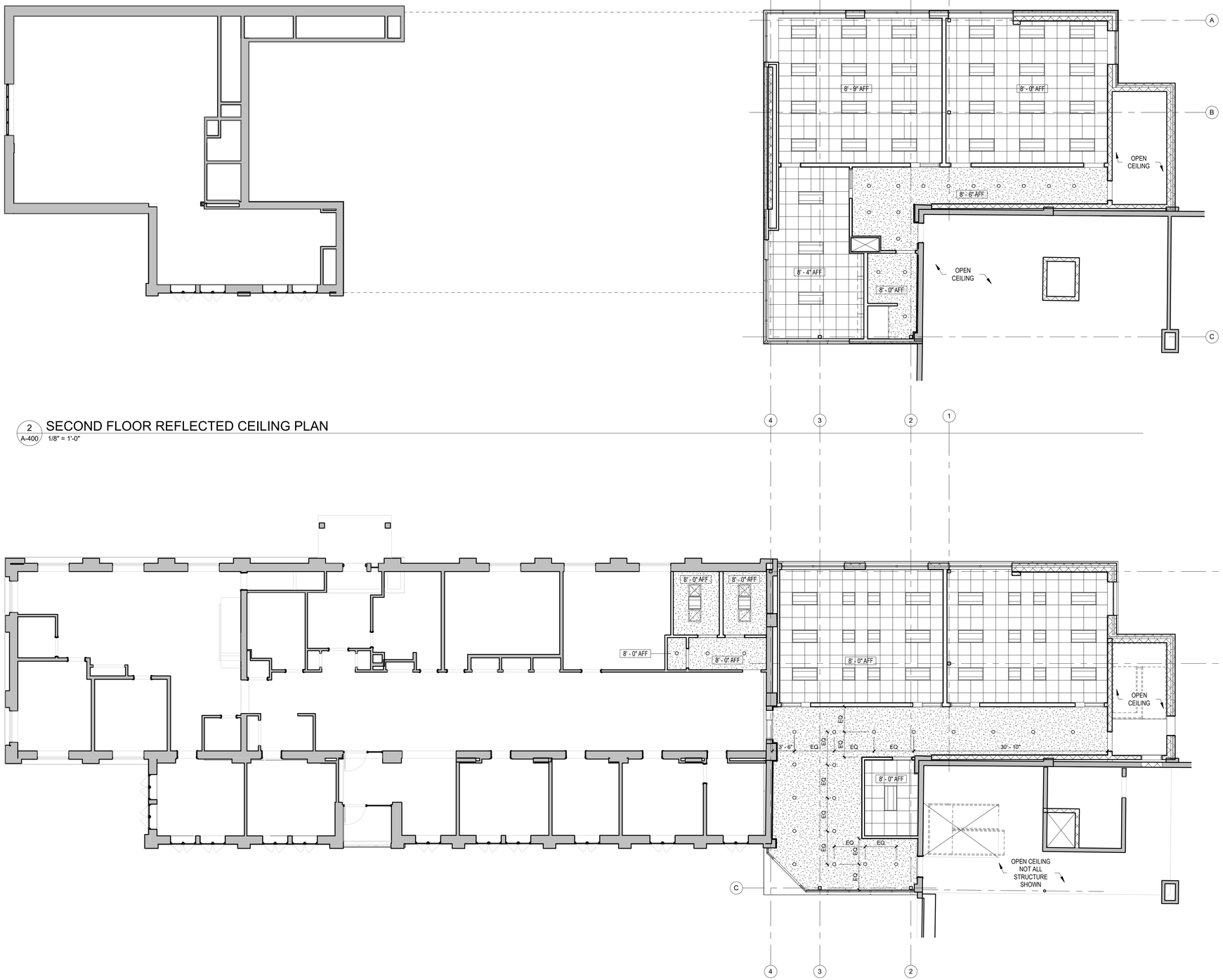

2 A-400 SECOND FLOOR REFLECTED CEILING PLAN

1/8" = 1'-0"

1 A-400 FIRST FLOOR REFLECTED CEILING PLAN

1/8" = 1'-0"

GENERAL RCP NOTES

1. REFER TO SHEET A800 FOR WALL TYPES, MATERIAL LEGEND, SYMBOL LEGEND AND ABBREVIATIONS USED.
2. ALL LIGHT FIXTURES, SPRINKLER HEADS, GRILLES, DIFFUSERS, ETC. LOCATED WITHIN ACT CEILINGS SHALL BE CENTERED IN CEILING TILES.
3. ALL ACT CEILING GRID SHALL BE CENTERED WITHIN SPACES & LAYED OUT TO PREVENT THE CUTTING OF TILES TO ANY DIMENSION LESS THAN 6" (UNLESS OTHERWISE INDICATED).
4. IN AN EFFORT TO ENSURE THAT CEILING HEIGHTS INDICATED ON THESE DOCUMENTS ARE MAINTAINED, ALL SUB-CONTRACTORS ARE REQUIRED TO COORDINATE W/OTHER TRADES ON MOUNTING HEIGHTS OF ALL MEP ITEMS LOCATED ABOVE ACT CEILINGS PRIOR TO INSTALLATION OF ANY ITEMS. ANY WORK INSTALLED THAT WOULD PREVENT THE INSTALLATION OF THE CEILING AT THE HEIGHT INDICATED ON THESE DOCUMENTS SHALL BE REMOVED & REINSTALLED AS REQUIRED AT THE EXPENSE OF THE SUB-CONTRACTOR RESPOSIBLE FOR INSTALLING SAID WORK.
5. REFER TO U.L. FIRE RESISTANCE DIRECTORY FOR DETAILS ON FIRE RATED WALLS, COLUMNS ENCLOSURES, FLOOR/CEILING ASSEMBLIES & CEILING/ROOF ASSEMBLIES.
6. PROVIDE DRAFTSTOPPING AT THE TOP OF ALL CONCEALED WALL CAVITIES. DRAFTSTOPPING SHALL BE OF AN BCNYS APPROVED MATERIAL AND SHALL PREVENT THE PASSAGE OF SMOKE FROM THE WALL CAVITY INTO ANY ADJACENT CEILING/FLOOR OR CEILING/ROOF CAVITIES.
7. ALL STRUCTURE., MECH., ELEC., PLUMB. AND FIRE PROTECTION ELEMENTS SHOWN ARE FOR REFERENCE ONLY. CONTRACTOR SHALL REFER TO OTHER SECTIONS OF THE DOCUMENTS AS APPOPRIATE FOR OTHER TRADES. WHERE DISCREPANCIES EXIST BETWEEN ARCH. DRAWINGS AND OTHER TRADES CONTRACTOR SHALL NOTIFY CM OR GC & ARCHITECT PRIOR TO PERFORMING ANY WORK RELATED TO SAID DISCREPANCY.
8. COORD. MECH COVERS, GRILLES, ETC. WITH MECH. DWG'S. COLORS TO BE SELECTED BY ARCHITECT FROM MANUFACTURES FULL RANGE, INCLUDING PREMIUM FINISHES/COLORS.
9. SPRINKLER HEADS LOCATED IN GWB CEILINGS TO BE CONCEALED TYPE HEADS.
10. REFER TO RM FINISH SCHEDULES FOR ALL INTERIOR FINISHES.
11. SPRINKLER HEADS TO BE LOCATED PER FIRE PROTECTION DWG'S UNLESS OTHERWISE NOTED.
12. ALL KEY PLANS ARE FOR REFERENCE ONLY.

RCP'S MATERIALS LEGEND

ALL MATERIALS NOT NECESSARILY USED

EXP - EXPOSED - EXIST TO REMAIN; PATCH & REPAIR PLASTER AS REQ'D - PAINT

ACT 1 - 2'x2' ACOUSTICAL CEILING TILE

ACT 2 - 2'x4' ACOUSTICAL CEILING TILE

GWB 1 - SUSPENDED GYPSUM WALL BOARD CEILING SYSTEM - PAINT

GWB 2 - GYPSUM WALL BOARD CEILING SYSTEM AT RESIDENTIAL FLOORS - REF 9/A-450 TYP.

RCP'S SYMBOLS LEGEND

ALL SYMBOLS NOT NECESSARILY USED; SYMBOLS NOT TO SCALE

PENDANT MOUNTED CEILING FAN - ARCH./INTERIOR DESIGNER TO DETERMINE MOUNTING HEIGHT IN FIELD

KITCHEN ISLAND PENDANT LIGHT FIXT. - ARCH./INTERIOR DESIGNER TO DETERMINE MOUNTING HEIGHT IN FIELD

TRACK LIGHTING - ARCH./INTERIOR DESIGNER TO LOCATE HEADS IN FIELD - REF. ELEC DWG'S

SURFACE MOUNTED LIGHT FIXT.

SEMI-RECESSED LIGHT FIXT.

RECESSED LIGHT FIXT.

WALL MOUNTED AT BATHROOM MIRROR LIGHT FIXT.

WALL MOUNTED SCONCE

PENDANT LOBBY/VESTIBULE CEILING LIGHT FIXT.

FLOURESCENT WALL MOUNTED LIGHT FIXT.

FLOURESCENT SURFACE MOUNTED LIGHT FIXT.

SPRINKLER HEAD - REF. FP DWG'S

SPRINKLER HEAD - REF. FP DWG'S

DIFFUSER AT ACT - REF. MECH DWG'S

DIFFUSER AT GWB. - REF. MECH DWG'S

SECURITY CAMERA

EMERGENCY SIGNAGE

CJS ARCHITECTS
BUFFALO | ROCHESTER
www.cjsarchitects.com

PERMIT SET

FLINT AVE.

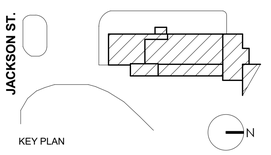

KEY PLAN

COLD SPRING CONSTRUCTION CO.

ADDITION & RENOVATION

43 JACKSON ST.
AKRON, NY14001

REV. #	DESCRIPTION	DATE

JOB NO.	2103
SCALE	As indicated
ISSUE DATE	02/17/22
DRAWN BY	NAT
CHECKED BY	JMC

THIS IS A SINGLE SHEET OF A COHESIVE SET OF CONSTRUCTION DOCUMENTS (INCLUDING DRAWINGS AND SPECIFICATIONS). INTERPRETATION OF THE INFORMATION AS PRESENTED SHOULD BE BASED ON THE ENTIRE SET OF DOCUMENTS.

DRAWING TITLE

REFLECTED CEILING PLAN

A-400

PERMIT SET

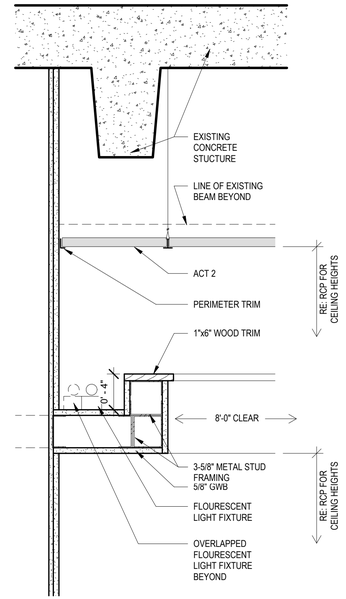

7 A-450 RCP DETAIL - COVE LIGHTING - TYP.
1 1/2" = 1'-0"

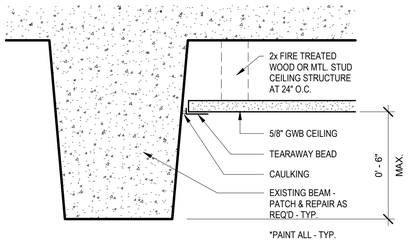

9 A-450 RCP DETAIL - GWB 2 INFILL AT UNDERSIDE OF DECK - TYP.
3" = 1'-0"

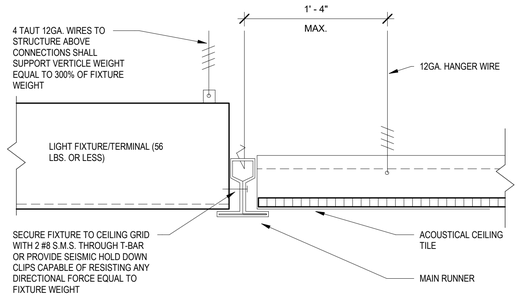

8 A-450 RCP DETAIL - LIGHT FIXTURE AT ACT - TYP.
1 1/2" = 1'-0"

6B A-450 RCP DETAIL - ACT CLOUD EDGE - TYP.
1 1/2" = 1'-0"

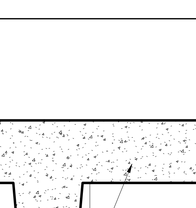

6A A-450 RCP DETAIL - ACT AT WALL - TYP.
1 1/2" = 1'-0"

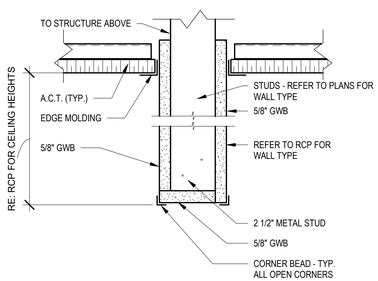

5 A-450 RCP DETAIL - ACT/GWB/ACT OFFSET - TYP.
1 1/2" = 1'-0"

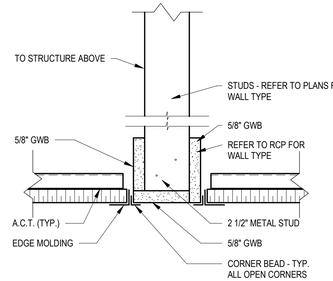

4 A-450 RCP DETAIL - ACT/GWB/ACT FLUSH - TYP.
1 1/2" = 1'-0"

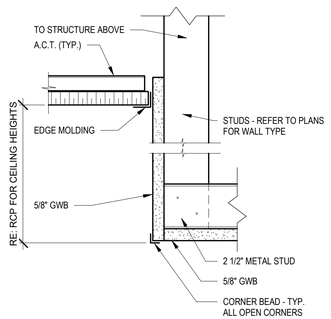

3 A-450 RCP DETAIL - GWB TO ACT OFFSET - TYP.
1 1/2" = 1'-0"

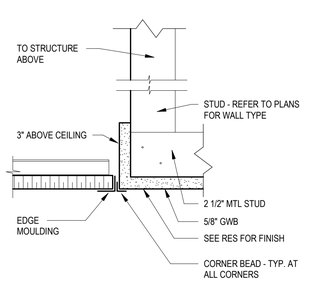

2 A-450 RCP DETAIL - GWB TO ACT FLUSH - TYP.
1 1/2" = 1'-0"

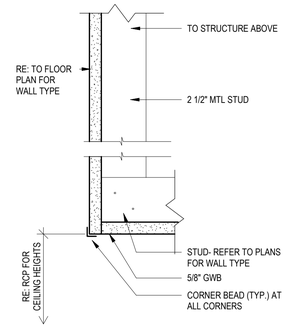

1 A-450 RCP DETAIL - GWB SOFFIT CORNER - TYP.
1 1/2" = 1'-0"

CJS ARCHITECTS
BUFFALO | ROCHESTER
www.cjsarchitects.com

PERMIT SET

FLINT AVE.

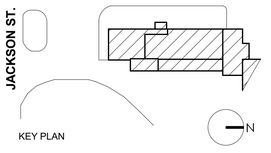

COLD SPRING CONSTRUCTION CO.

ADDITION & RENOVATION

43 JACKSON ST.
AKRON, NY14001

REV. #	DESCRIPTION	DATE

JOB NO.	2103
SCALE	As indicated
ISSUE DATE	02/17/22
DRAWN BY	NAT
CHECKED BY	JMC

THIS IS A SINGLE SHEET OF A COHESIVE SET OF CONSTRUCTION DOCUMENTS (INCLUDING DRAWINGS AND SPECIFICATIONS). INTERPRETATION OF THE INFORMATION AS PRESENTED SHOULD BE BASED ON THE ENTIRE SET OF DOCUMENTS.

DRAWING TITLE

TYPICAL CEILING DETAILS

A-450

PERMIT SET

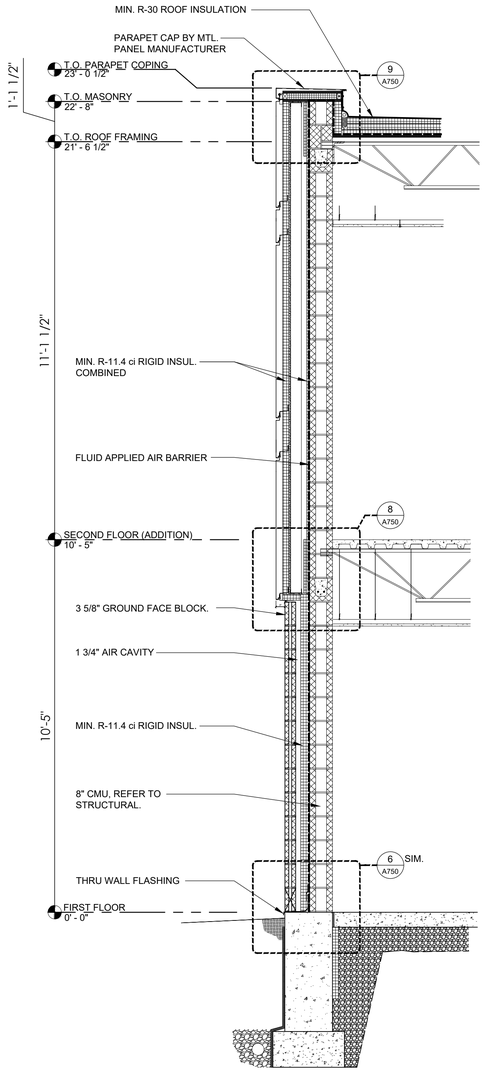

4 A500 WALL SECTION 4
SCALE:1/2" = 1'-0"

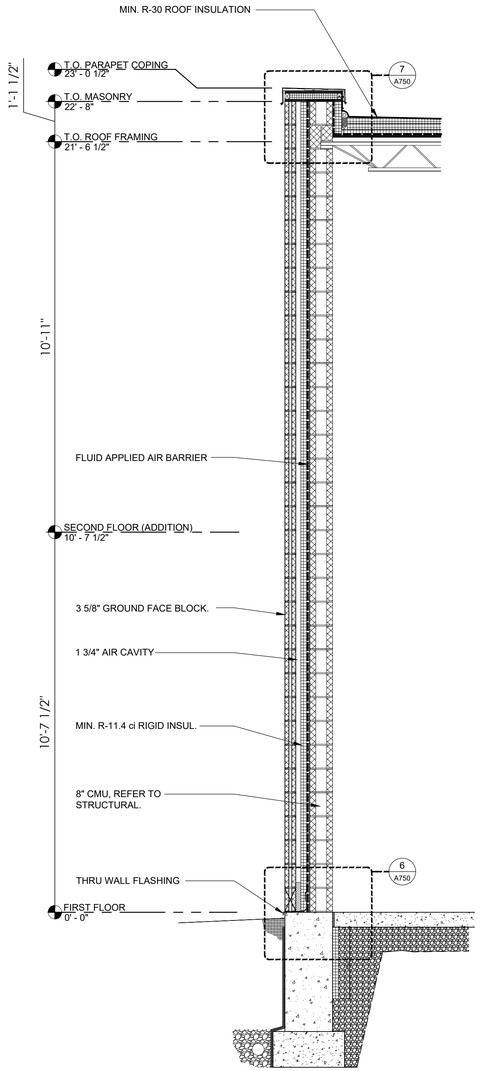

3 A500 WALL SECTION 3
SCALE:1/2" = 1'-0"

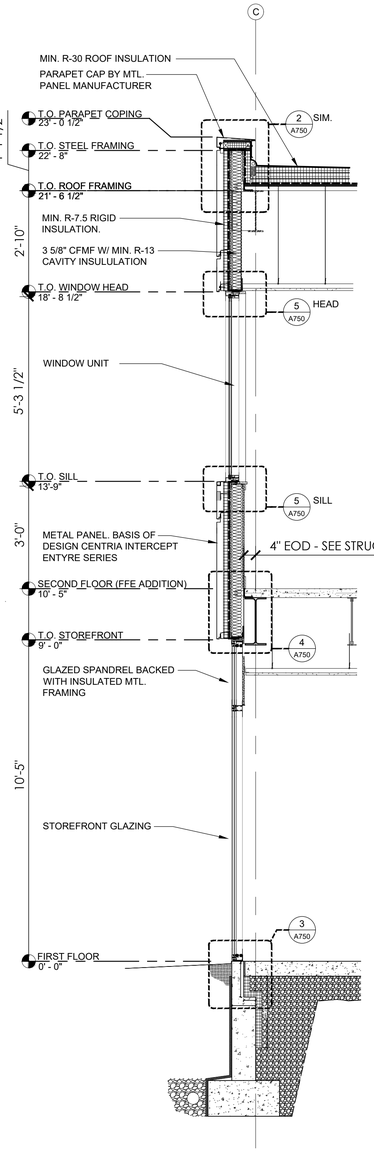

2 A500 WALL SECTION 2
SCALE:1/2" = 1'-0"

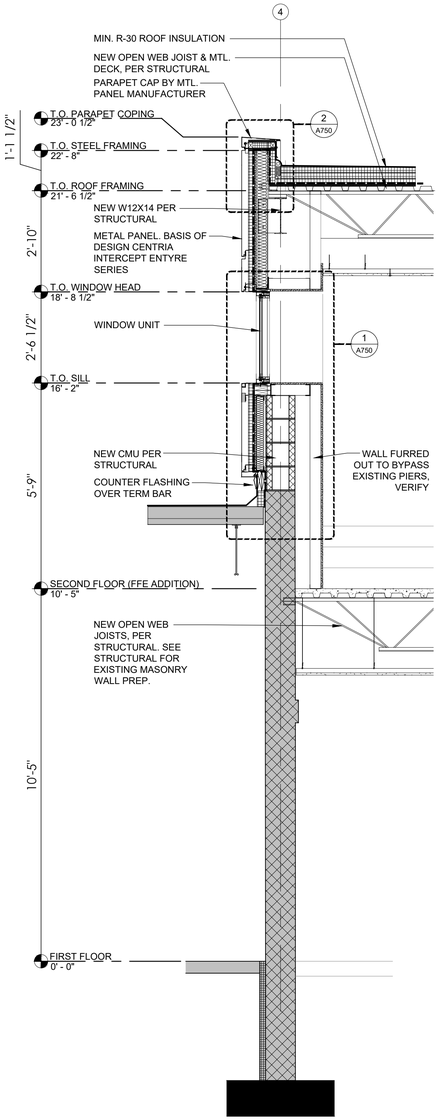

1 A500 WALL SECTION 1
SCALE:1/2" = 1'-0"

CJS ARCHITECTS
BUFFALO | ROCHESTER
www.cjsarchitects.com

PERMIT SET

FLINT AVE.

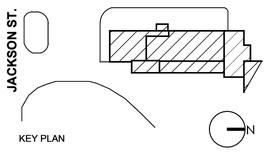

KEY PLAN

COLD SPRING CONSTRUCTION CO.

ADDITION & RENOVATION

43 JACKSON ST.
AKRON, NY14001

REV. #	DESCRIPTION	DATE

JOB NO.	2103
SCALE	1/8" = 1'-0"
ISSUE DATE	02/17/2022
DRAWN BY	NT
CHECKED BY	JC

THIS IS A SINGLE SHEET OF A COHESIVE SET OF CONSTRUCTION DOCUMENTS (INCLUDING DRAWINGS AND SPECIFICATIONS). INTERPRETATION OF THE INFORMATION AS PRESENTED SHOULD BE BASED ON THE ENTIRE SET OF DOCUMENTS.

DRAWING TITLE

WALL SECTIONS

A-500

PERMIT SET

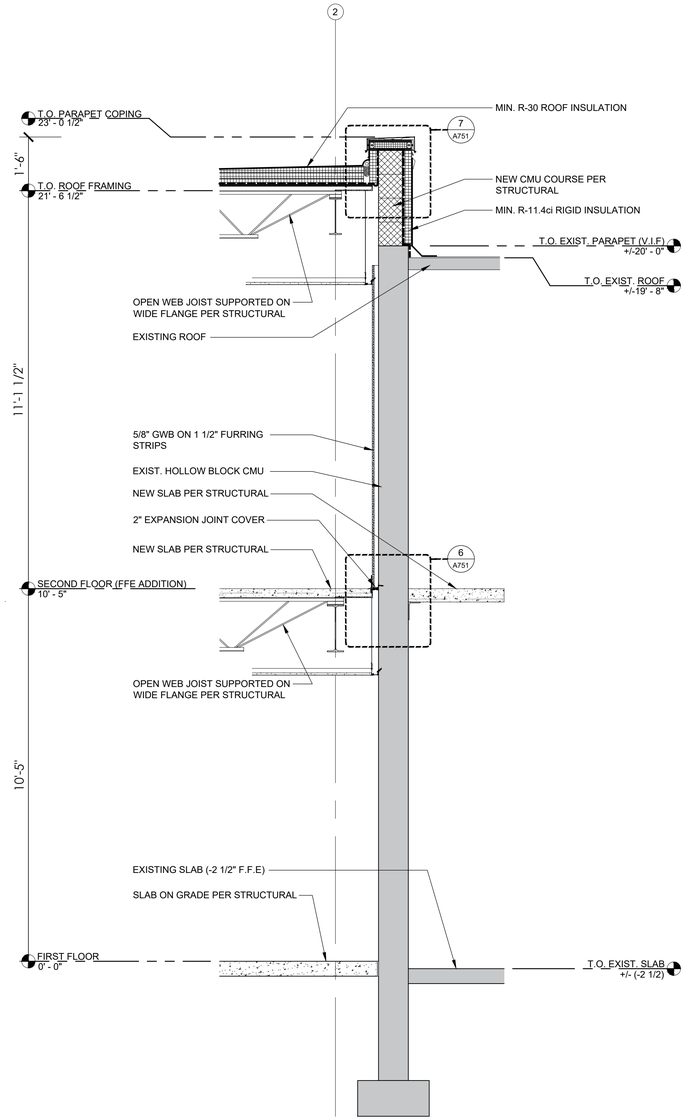

3 A501 WALL SECTION 3
SCALE:1/2" = 1'-0"

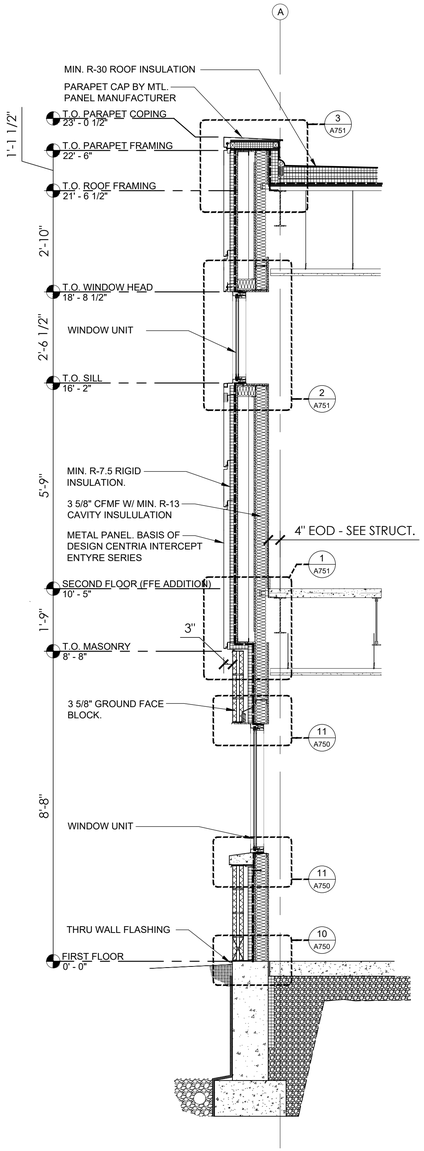

2 A501 WALL SECTION 2
SCALE:1/2" = 1'-0"

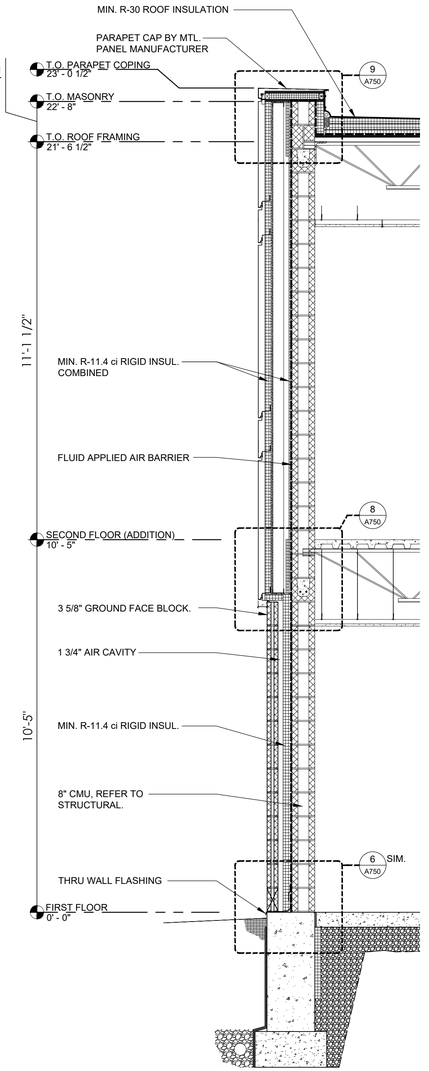

1 A501 WALL SECTION 1
SCALE:1/2" = 1'-0"

CJS ARCHITECTS
BUFFALO | ROCHESTER
www.cjsarchitects.com

PERMIT SET

FLINT AVE.

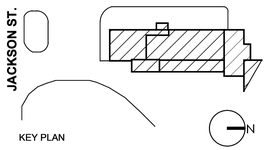

KEY PLAN

COLD SPRING CONSTRUCTION CO.

ADDITION & RENOVATION

43 JACKSON ST.
AKRON, NY14001

REV. #	DESCRIPTION	DATE

JOB NO.	2103
SCALE	1/8" = 1'-0"
ISSUE DATE	02/17/2022
DRAWN BY	NT
CHECKED BY	JC

THIS IS A SINGLE SHEET OF A COHESIVE SET OF CONSTRUCTION DOCUMENTS (INCLUDING DRAWINGS AND SPECIFICATIONS). INTERPRETATION OF THE INFORMATION AS PRESENTED SHOULD BE BASED ON THE ENTIRE SET OF DOCUMENTS.

DRAWING TITLE

WALL SECTIONS

A-501

PERMIT SET

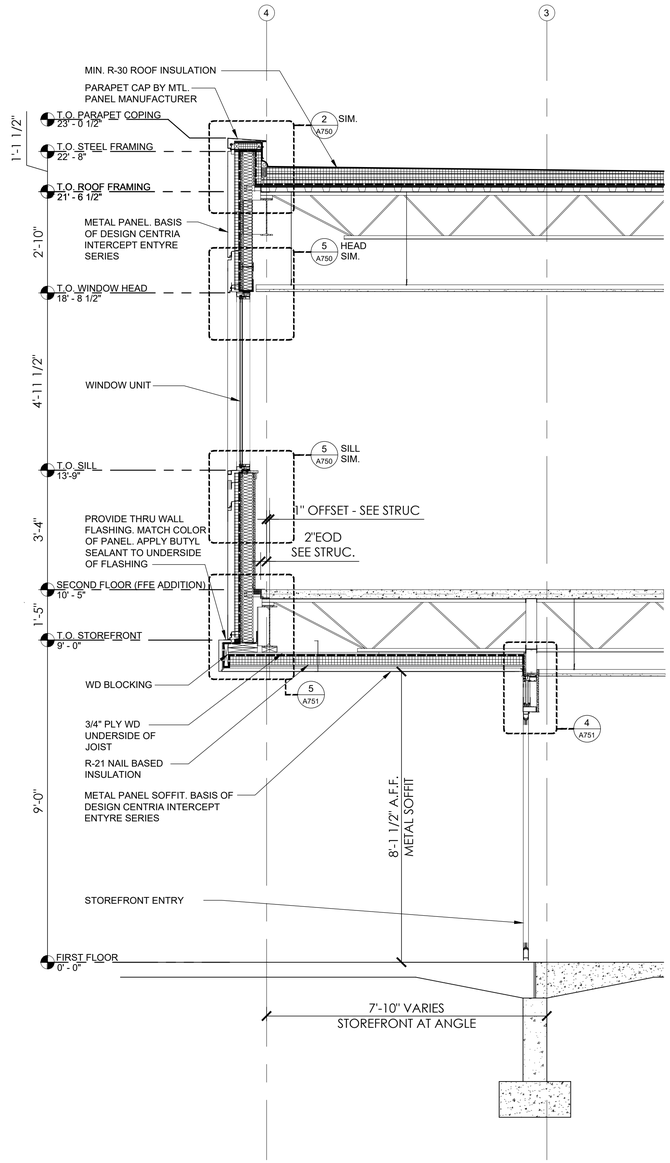

1 A502 WALL SECTION 1
SCALE:1/2" = 1'-0"

CJS ARCHITECTS
BUFFALO | ROCHESTER
www.cjsarchitects.com

PERMIT SET

FLINT AVE.

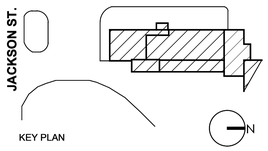

KEY PLAN

COLD SPRING CONSTRUCTION CO.

ADDITION & RENOVATION

43 JACKSON ST.
AKRON, NY14001

REV. #	DESCRIPTION	DATE

JOB NO.	2103
SCALE	1/8" = 1'-0"
ISSUE DATE	02/17/2022
DRAWN BY	NT
CHECKED BY	JC

THIS IS A SINGLE SHEET OF A COHESIVE SET OF CONSTRUCTION DOCUMENTS (INCLUDING DRAWINGS AND SPECIFICATIONS). INTERPRETATION OF THE INFORMATION AS PRESENTED SHOULD BE BASED ON THE ENTIRE SET OF DOCUMENTS.

DRAWING TITLE

WALL SECTIONS

A-502

PERMIT SET

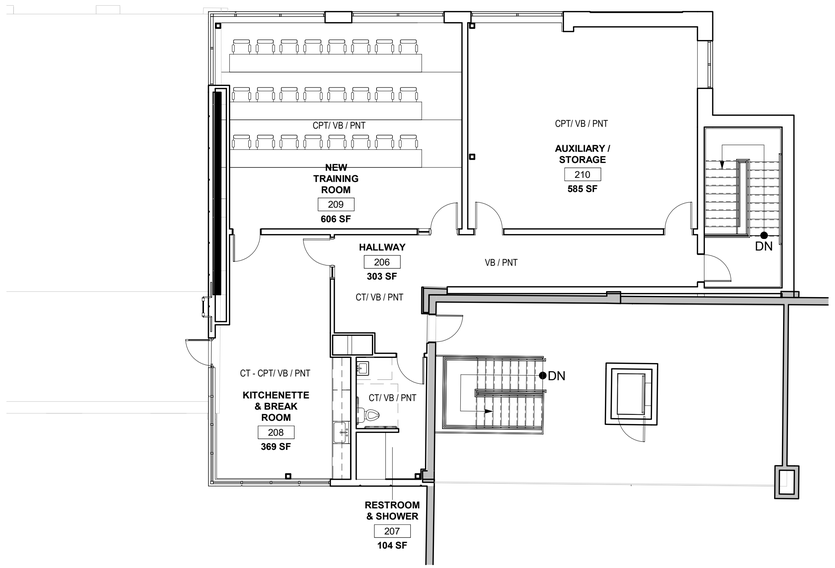

2 A-600 A602_ SECOND FLOOR FINISH PLAN

1/8" = 1'-0"

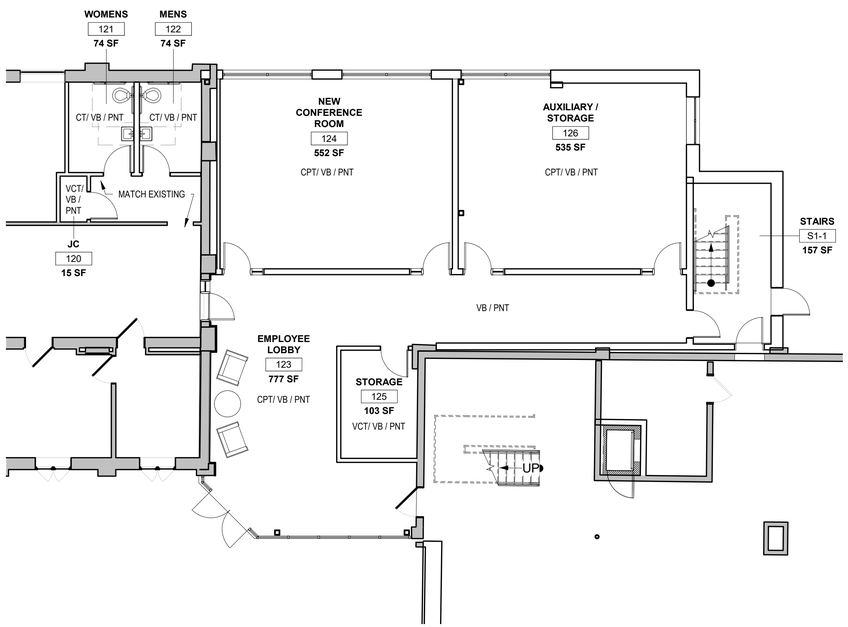

1 A-600 FIRST FLOOR PLAN

1/8" = 1'-0"

ROOM FINISH SCHEDULE

ROOM NO	NAME	FLOOR FINISH	BASE FINISH	WALL FINISH	CEILING FINISH	REMARKS
FIRST FLOOR						
120	JC	VCT	VB	PNT	GWB-PNT	
121	WOMENS	CT	VB	PNT	GWB-PNT	
122	MENS	CT	VB	PNT	GWB-PNT	
123	EMPLOYEE LOBBY	CT	VB	PNT	ACT	
124	NEW CONFERENCE ROOM	CPT	VB	PNT	ACT	
125	STORAGE	VCT	VB	PNT	ACT	
126	AUXILIARY / STORAGE	VCT	VB	PNT	ACT	
S1-1	STAIRS	EXPOSED CONC.	VB	PNT	EXPOSED CEILING	
SECOND FLOOR						
201	CAD ROOM	-	-	-	-	
202	ENGINEERING	-	-	-	-	
203	SHOWER	-	-	-	-	
204	MENS	-	-	-	-	
205	MECH	-	-	-	-	
206	HALLWAY	CT	VB	PNT	GWB-PNT	
207	RESTROOM & SHOWER	CT	VB	PNT	GWB-PNT	
208	KITCHENETTE & BREAK ROOM	CT / CPT	VB	PNT	ACT	
209	NEW TRAINING ROOM	CPT	VB	PNT	ACT	
210	AUXILIARY / STORAGE	CPT	VB	PNT	ACT	
211	WAREHOUSE MEZZANINE	-	-	-	-	

GENERAL PLAN NOTES

1. THE CONTRACTOR DOCUMENTS ARE COMPLIMENTARY TO EACH OTHER. WHAT IS REQUIRED FOR ONE DRAWING SHALL BE AS BINDING AS IF REQUIRED FOR ALL.
2. ALL WALLS TO BE PAINTED P-1 UNLESS OTHERWISE NOTED.
3. ALL DRYWALL CEILINGS, SOFFITS AND FASCIAS SHALL BE PAINTED CEILING WHITE, UNLESS NOTED OTHERWISE. FOR LOCATIONS REFER TO CEILING PLAN.
4. ALL EXISTING WALLS, COLUMNS AND CEILINGS TO BE CLEANED AND PREPARED FOR PAINTING. PAINT CEILINGS UNLESS OTHERWISE NOTED.
5. CONTRACTOR SHALL INSPECT & APPROVE ALL SUB-SURFACE PRIOR TO INSTALLATION OF FINISHES. STRICTLY COMPLY WITH THE MANUFACTURER'S INSTRUCTIONS & RECOMMENDATIONS FOR BOTH PREPARATION OF SURFACES AND INSTALLATION OF FINISHES. ALL SUB-SURFACE SHALL BE PROPERLY REPAIRED TO RECEIVE INTENDED & SPECIFIED FINISHES. SUB-SURFACES TO RECEIVE NEW FINISHES INCLUDE, BUT ARE NOT LIMITED TO: EXISTING GYPSUM WALL BOARD, CEILINGS, NEW GYPSUM WALL BOARD, CONDUIT, COLUMNS, DOOR FRAMES, EXISTING MASONRY WALLS, WINDOW FRAMES, NEW MASONRY WALLS, FLOORS.
6. PROVIDE ALL REQUIRED TRANSITION STRIPS BETWEEN NEW AND EXISTING FLOORING MATERIALS, AND AT ALL CARPET / TILE / RESILIENT FLOORING TRANSITION POINTS, IN COLOR AS SELECTED BY ARCHITECT.
7. WHERE FLOORING MATERIAL CHANGES AT DOOR OPENINGS, TRANSITION SHALL OCCUR AT CENTERLINE OF DOOR OPENING.
8. HATCH INDICATES MATERIAL AND SCOPE ONLY; DOES NOT REPRESENT ORIENTATION OR PATTERN. CONTRACTOR TO COORDINATE PATTERN AND DIRECTION OF CARPET WITH ARCHITECT PRIOR TO COMMENCEMENT OF WORK.
9. ALL BASE TYPES SHALL BE B-1; 4" HIGH UNLESS OTHERWISE NOTED. USE STRAIGHT BASE AT CARPET AND COVE BASE AT VCT.
10. ALL EXISTING PAINTED WOOD DOORS AND METAL FRAMES SHALL BE PAINTED, 2 COATS SEMI-GLOSS ENAMEL PAINT.
11. VERIFY LEVEL 5 FINISH AT ALL PARTITIONS WITH ACCENT COLORS OR SPECIALTY PAINT SCHEDULED.
12. THE CONTRACTOR SHALL SUBMIT CARPET INSTALLATION PLANS SHOWING CARPET TYPE, SEAMING AND DIRECTION FOR APPROVAL BY ARCHITECT PRIOR TO ORDERING.
13. FLOOR FINISH AND WALL BASE TO CONTINUE UNDER COUNTER TOPS, ANY MILLWORK OPENINGS AND HANDICAPPED KITCHEN SINK CABINETS.

CJS ARCHITECTS
BUFFALO | ROCHESTER
www.cjsarchitects.com

PERMIT SET

FLINT AVE.

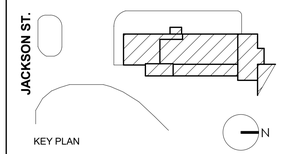

KEY PLAN

COLD SPRING CONSTRUCTION CO.

ADDITION & RENOVATION

43 JACKSON ST.
AKRON, NY14001

REV. #	DESCRIPTION	DATE

JOB NO.	2103
SCALE	As indicated
ISSUE DATE	02/17/22
DRAWN BY	NAT
CHECKED BY	JMC

THIS IS A SINGLE SHEET OF A COHESIVE SET OF CONSTRUCTION DOCUMENTS (INCLUDING DRAWINGS AND SPECIFICATIONS). INTERPRETATION OF THE INFORMATION AS PRESENTED SHOULD BE BASED ON THE ENTIRE SET OF DOCUMENTS.

DRAWING TITLE

FINISH PLAN

A-600

PERMIT SET

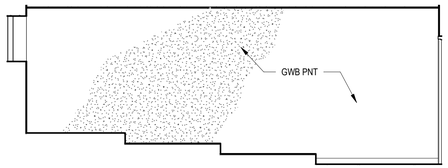

7 A-610 TRAINING ROOM - 3
A-610 1/4" = 1'-0"

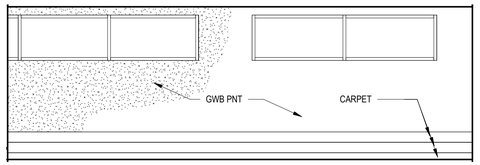

6 A-610 TRAINING ROOM - 2
A-610 1/4" = 1'-0"

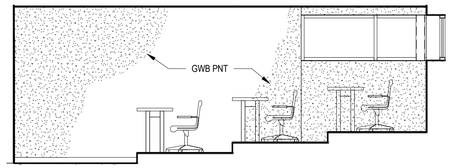

5 A-610 TRAINING ROOM - 1
A-610 1/4" = 1'-0"

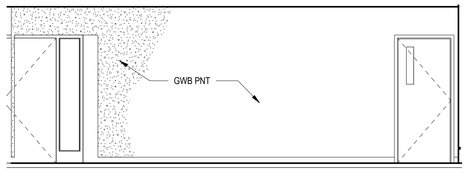

8 A-610 TRAINING ROOM - 4
A-610 1/4" = 1'-0"

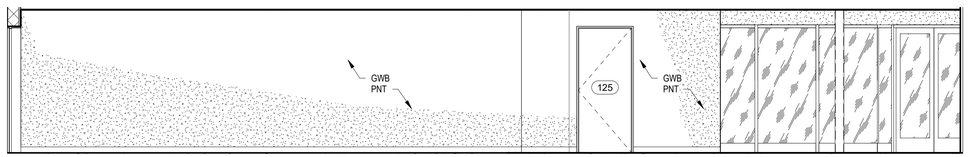

4 A-610 NEW EMPLOYEE ENTRY - 4
A-610 1/4" = 1'-0"

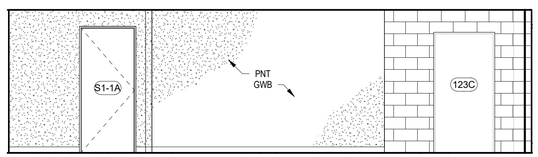

3 A-610 NEW EMPLOYEE ENTRY - 3
A-610 1/4" = 1'-0"

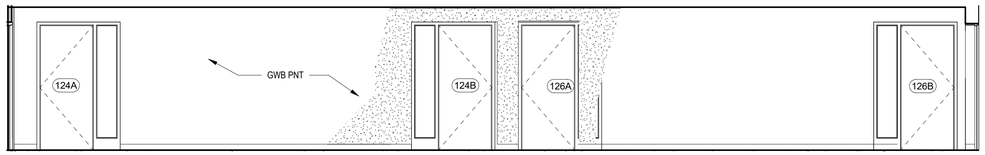

2 A-610 NEW EMPLOYEE ENTRY - 2
A-610 1/4" = 1'-0"

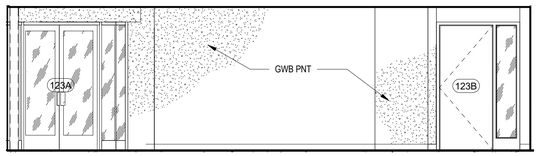

1 A-610 NEW EMPLOYEE ENTRY - 1
A-610 1/4" = 1'-0"

CJS ARCHITECTS
BUFFALO | ROCHESTER
www.cjsarchitects.com

PERMIT SET

FLINT AVE.

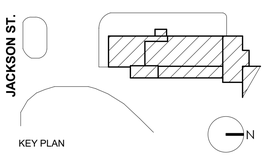

COLD SPRING
CONSTRUCTION CO.

ADDITION & RENOVATION

43 JACKSON ST.
AKRON, NY14001

REV. #	DESCRIPTION	DATE

JOB NO.	2103
SCALE	1/4" = 1'-0"
ISSUE DATE	02/17/22
DRAWN BY	NAT
CHECKED BY	JMC

THIS IS A SINGLE SHEET OF A COHESIVE
SET OF CONSTRUCTION DOCUMENTS
(INCLUDING DRAWINGS AND SPECIFICATIONS).
INTERPRETATION OF THE INFORMATION
AS PRESENTED SHOULD BE BASED ON
THE ENTIRE SET OF DOCUMENTS.

DRAWING TITLE

INTERIOR ELEVATIONS

A-610

PERMIT SET

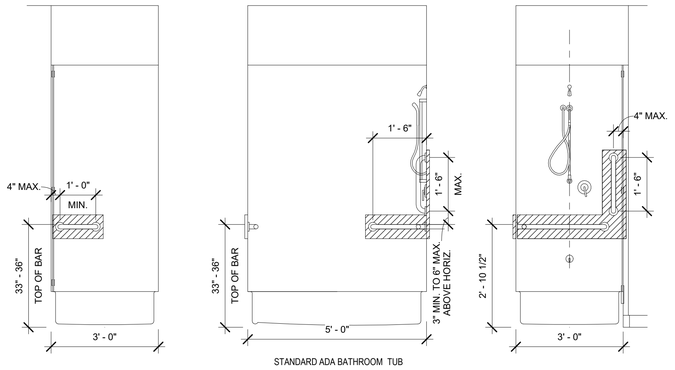

STANDARD ADA BATHROOM TUB

20 STANDARD ADA BATHROOM DIAGRAMS
A-650 1/2" = 1'-0"

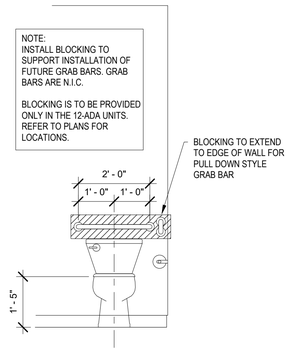

STANDARD RESIDENTIAL ADA FLOOR MOUNTED W.C.

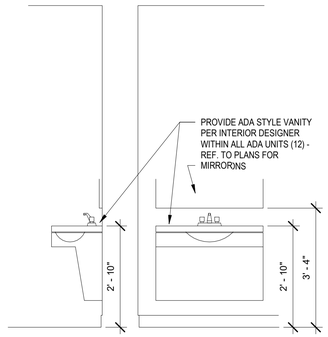

STANDARD RESIDENTIAL ADA VANITY MOUNTING HEIGHT

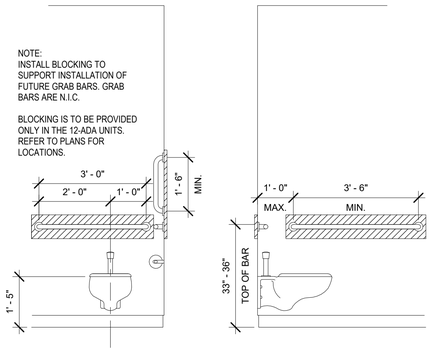

ADA WALL MOUNTED W.C.

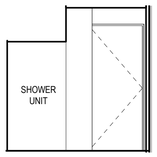

13 UNISEX - ELEVATION 5
A-650 1/4" = 1'-0"

12 UNISEX - ELEVATION 4
A-650 1/4" = 1'-0"

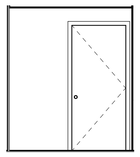

7 MENS - ELEVATION 3
A-650 1/4" = 1'-0"

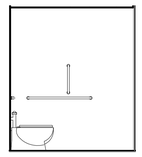

6 MENS - ELEVATION 2
A-650 1/4" = 1'-0"

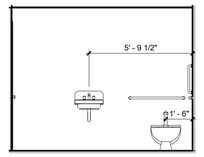

5 MENS - ELEVATION 1
A-650 1/4" = 1'-0"

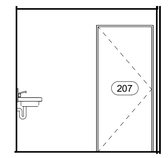

11 UNISEX - ELEVATION 3
A-650 1/4" = 1'-0"

10 UNISEX - ELEVATION 2
A-650 1/4" = 1'-0"

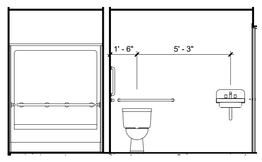

9 UNISEX - ELEVATION 1
A-650 1/4" = 1'-0"

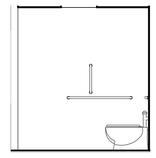

4 WOMENS - ELEVATION 3
A-650 1/4" = 1'-0"

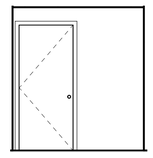

3 WOMENS - ELEVATION 2
A-650 1/4" = 1'-0"

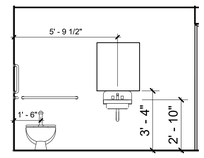

2 WOMENS - ELEVATION 1
A-650 1/4" = 1'-0"

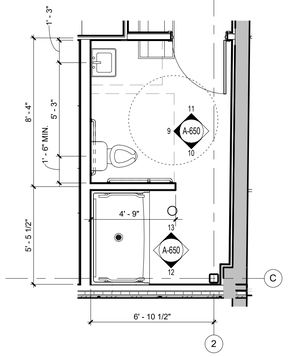

8 ENLARGED UNISEX TOILET @ 2ND FLOOR
A-650 1/4" = 1'-0"

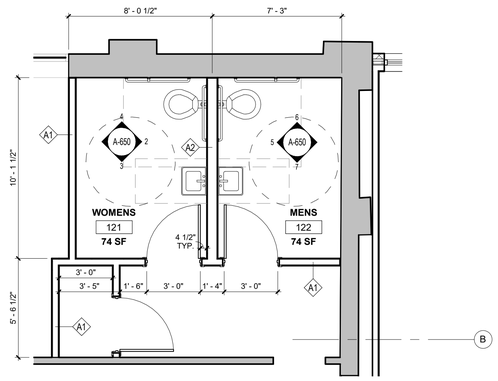

1 ENLARGED TOILET PLAN FIRST FLOOR
A-650 1/4" = 1'-0"

CJS ARCHITECTS
BUFFALO | ROCHESTER
www.cjsarchitects.com

PERMIT SET

FLINT AVE.

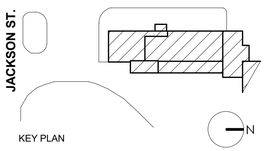

KEY PLAN

COLD SPRING CONSTRUCTION CO.

ADDITION & RENOVATION

43 JACKSON ST.
AKRON, NY14001

REV. #	DESCRIPTION	DATE

JOB NO.	2103
SCALE	As indicated
ISSUE DATE	02/17/22
DRAWN BY	NAT
CHECKED BY	JMC

THIS IS A SINGLE SHEET OF A COHESIVE SET OF CONSTRUCTION DOCUMENTS (INCLUDING DRAWINGS AND SPECIFICATIONS). INTERPRETATION OF THE INFORMATION AS PRESENTED SHOULD BE BASED ON THE ENTIRE SET OF DOCUMENTS.

DRAWING TITLE

TOILET ROOM

A-650

PERMIT SET

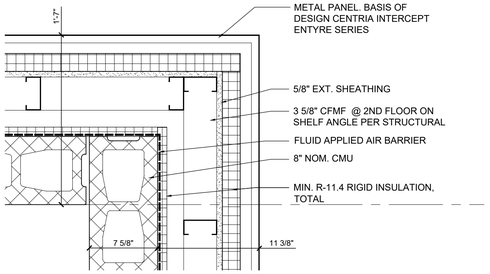

12 A700 PLAN DETAIL @ CFMF - MTL. PANEL CORNER
SCALE:1 1/2" = 1'-0"

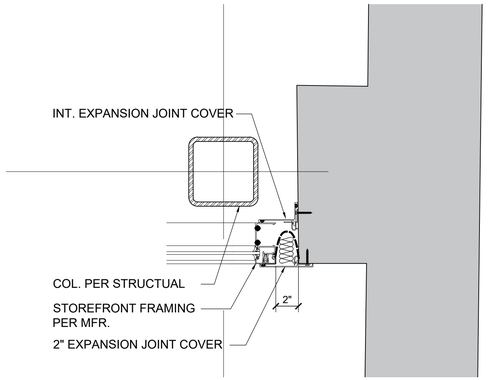

9 A700 PLAN DETAIL @ STOREFRONT NORTH ENDWALL (E.J.)
SCALE:1 1/2" = 1'-0"

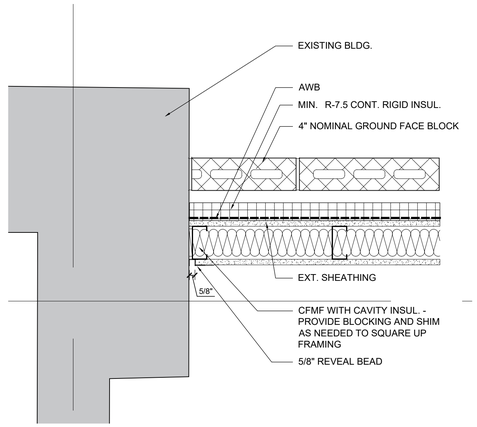

6 A700 PLAN DETAIL @ CFMF - VENEER ENDWALL
SCALE:1 1/2" = 1'-0"

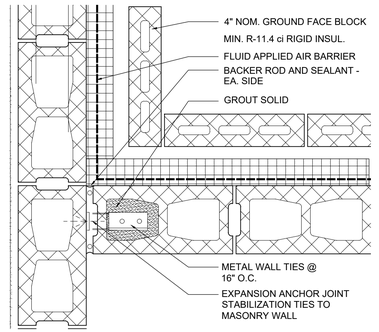

3 A700 PLAN DETAIL @ MASONRY INTERSECTION
SCALE:1 1/2" = 1'-0"

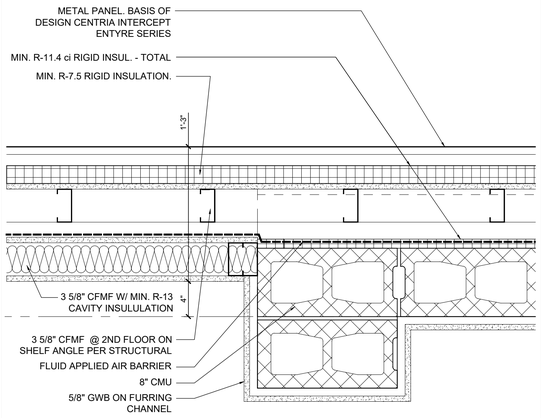

11 A700 PLAN DETAIL @ MASONRY TO CFMF TRANSITION
SCALE:1 1/2" = 1'-0"

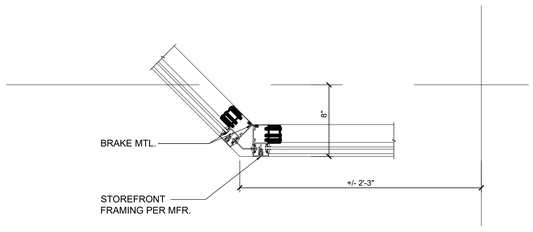

8 A700 PLAN DETAIL @ STOREFRONT INT/EXT CORNERS
SCALE:1 1/2" = 1'-0"

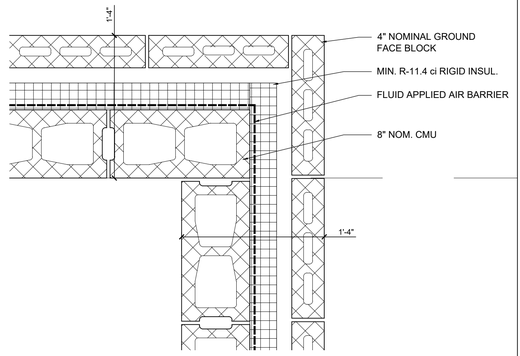

5 A700 PLAN DETAIL @ CFMF - VENEER CORNER
SCALE:1 1/2" = 1'-0"

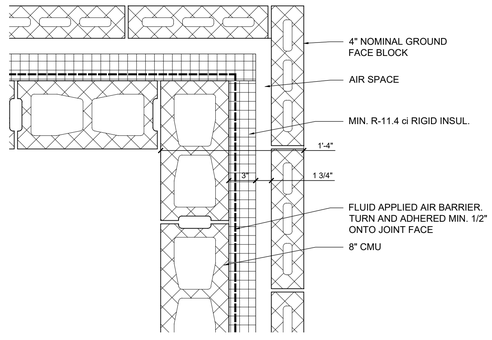

2 A700 PLAN DETAIL @ MASONRY-VENEER CORNER
SCALE:1 1/2" = 1'-0"

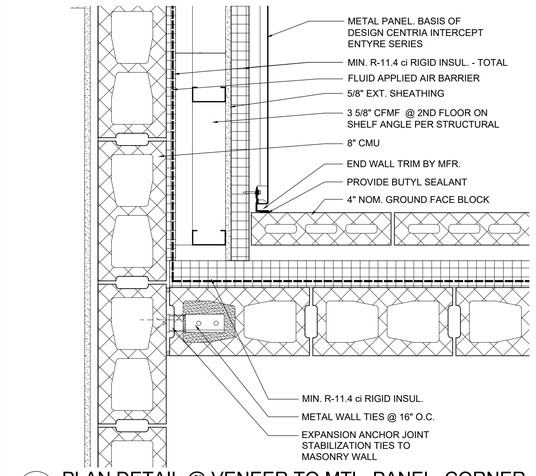

10 A700 PLAN DETAIL @ VENEER TO MTL. PANEL CORNER
SCALE:1 1/2" = 1'-0"

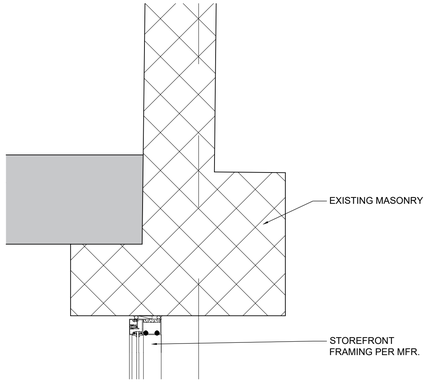

7 A700 PLAN DETAIL @ STOREFRONT SOUTH ENDWALL
SCALE:1 1/2" = 1'-0"

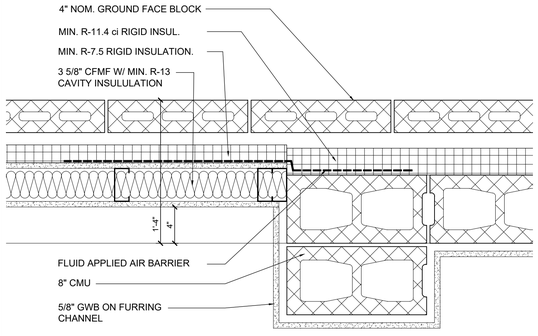

4 A700 PLAN DETAIL @ MASONRY & CFMF TRANSITION
SCALE:1 1/2" = 1'-0"

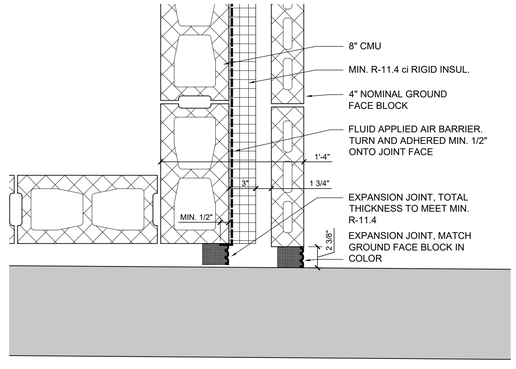

1 A700 PLAN DETAIL @ MASONRY EXPANSION JOINT
SCALE:1 1/2" = 1'-0"

CJS ARCHITECTS
BUFFALO | ROCHESTER
www.cjsarchitects.com

PERMIT SET

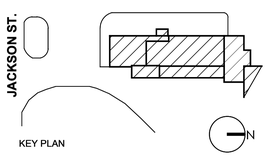

COLD SPRING CONSTRUCTION CO.

ADDITION & RENOVATION

43 JACKSON ST.
AKRON, NY14001

REV. #	DESCRIPTION	DATE

JOB NO.	2103
SCALE	1 1/2" = 1'-0"
ISSUE DATE	02/17/2022
DRAWN BY	NT
CHECKED BY	JC

THIS IS A SINGLE SHEET OF A COHESIVE SET OF CONSTRUCTION DOCUMENTS (INCLUDING DRAWINGS AND SPECIFICATIONS). INTERPRETATION OF THE INFORMATION AS PRESENTED SHOULD BE BASED ON THE ENTIRE SET OF DOCUMENTS.

DRAWING TITLE

PLAN DETAILS

A-700

PERMIT SET

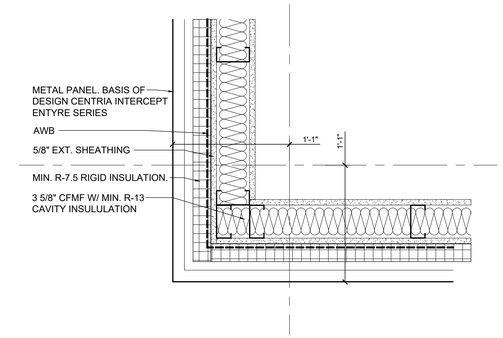

3 A701 PLAN DETAIL @ CFMF - MTL. PANEL CORNER
SCALE:1 1/2" = 1'-0"

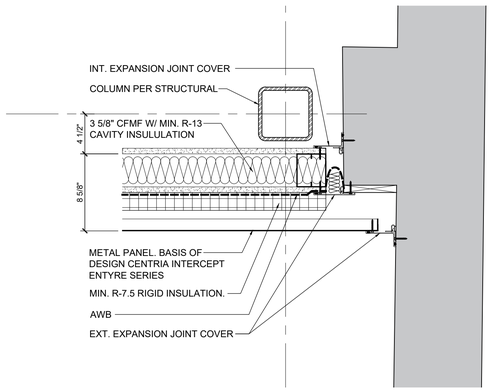

5 A701 PLAN DETAIL @ CFMF - MTL. ENDWALL (E.J.)
SCALE:1 1/2" = 1'-0"

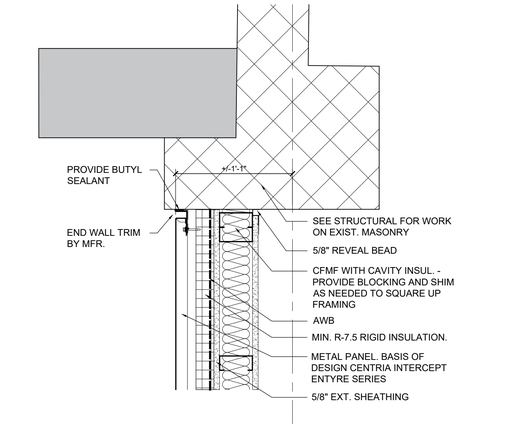

2 A701 PLAN DETAIL @ CFMF - MTL. PANEL ENDWALL
SCALE:1 1/2" = 1'-0"

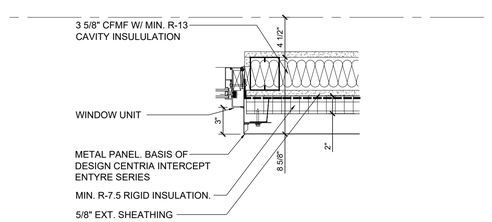

4 A701 PLAN DETAIL @ CFMF - MTL. WINDOW JAMB
SCALE:1 1/2" = 1'-0"

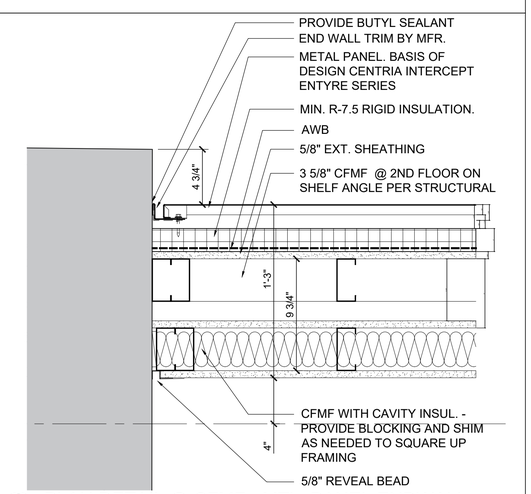

1 A701 PLAN DETAIL @ CFMF - MTL. PANEL ENDWALL
SCALE:1 1/2" = 1'-0"

CJS ARCHITECTS
BUFFALO | ROCHESTER
www.cjsarchitects.com

PERMIT SET

FLINT AVE.

JACKSON ST.

KEY PLAN

N

COLD SPRING CONSTRUCTION CO.

ADDITION & RENOVATION

43 JACKSON ST.
AKRON, NY14001

REV. #	DESCRIPTION	DATE

JOB NO.	2103
SCALE	1 1/2" = 1'-0"
ISSUE DATE	02/17/2022
DRAWN BY	NT
CHECKED BY	JC

THIS IS A SINGLE SHEET OF A COHESIVE SET OF CONSTRUCTION DOCUMENTS (INCLUDING DRAWINGS AND SPECIFICATIONS). INTERPRETATION OF THE INFORMATION AS PRESENTED SHOULD BE BASED ON THE ENTIRE SET OF DOCUMENTS.

DRAWING TITLE

PLAN DETAILS

A-701

PERMIT SET

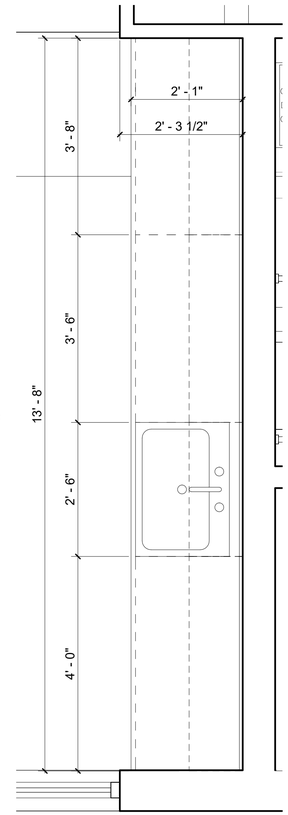

1 A-710 ENLARGED KITCHENETTE PLAN
3/4" = 1'-0"

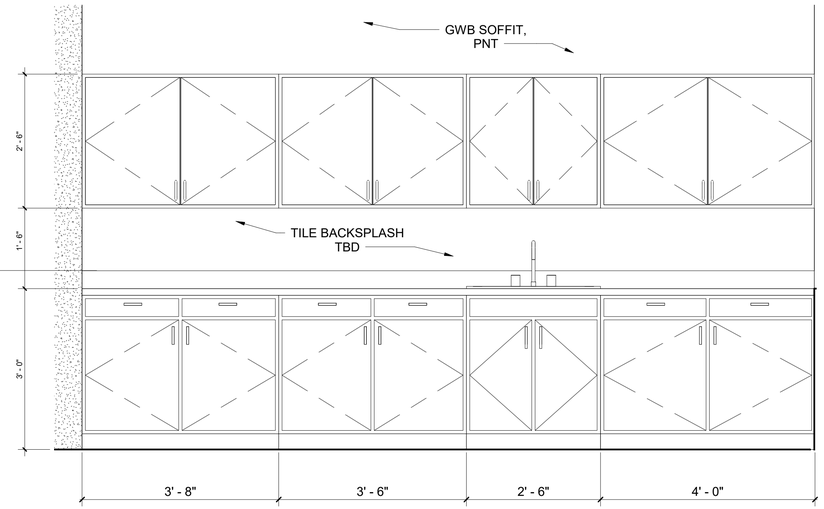

2 A-710 ENLARGED KITCHENETTE ELEVATION
3/4" = 1'-0"

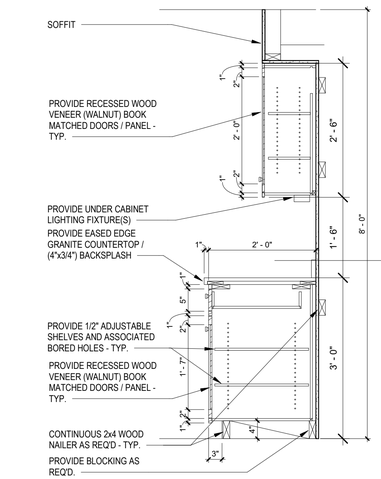

3 A-710 MILLWORK DETAIL
3/4" = 1'-0"

CJS ARCHITECTS
BUFFALO | ROCHESTER
www.cjsarchitects.com

PERMIT SET

FLINT AVE.

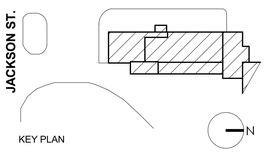

KEY PLAN

COLD SPRING CONSTRUCTION CO.

ADDITION & RENOVATION

43 JACKSON ST.
AKRON, NY14001

REV. #	DESCRIPTION	DATE

JOB NO.	2103
SCALE	3/4" = 1'-0"
ISSUE DATE	02/17/22
DRAWN BY	NAT
CHECKED BY	JMC

THIS IS A SINGLE SHEET OF A COHESIVE SET OF CONSTRUCTION DOCUMENTS (INCLUDING DRAWINGS AND SPECIFICATIONS). INTERPRETATION OF THE INFORMATION AS PRESENTED SHOULD BE BASED ON THE ENTIRE SET OF DOCUMENTS.

DRAWING TITLE

MILLWORK DETAILS

A-710

PERMIT SET

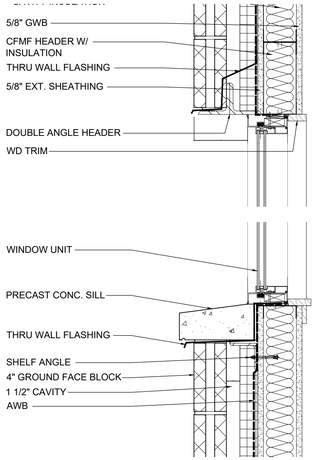

11 A750 SECTION DETAIL
SCALE:1 1/2" = 1'-0"

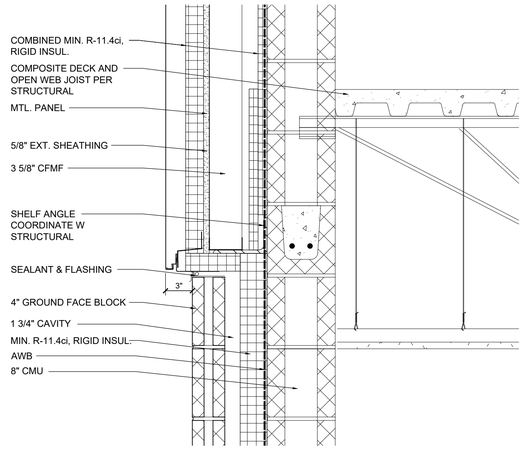

8 A750 SECTION DETAIL
SCALE:1 1/2" = 1'-0"

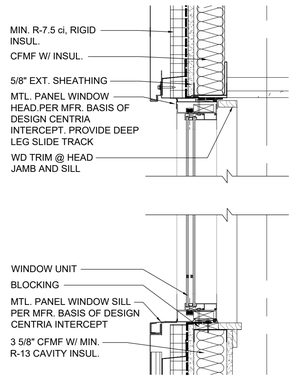

5 A750 SECTION DETAIL - WINDOW SILL & HEAD @ CFMF
SCALE:1 1/2" = 1'-0"

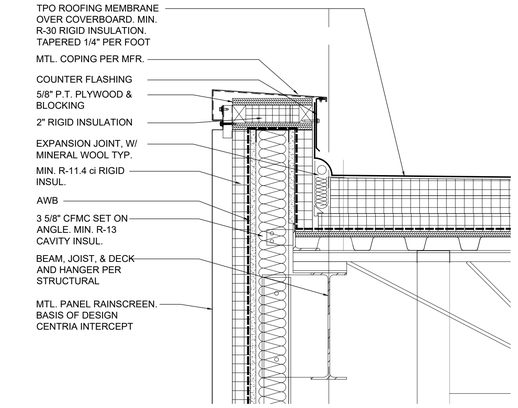

2 A750 SECTION DETAIL
SCALE:1 1/2" = 1'-0"

10 A750 SECTION DETAIL
SCALE:1 1/2" = 1'-0"

7 A750 SECTION DETAIL
SCALE:1 1/2" = 1'-0"

4 A750 SECTION DETAIL
SCALE:1 1/2" = 1'-0"

1 A750 SECTION DETAIL
SCALE:1 1/2" = 1'-0"

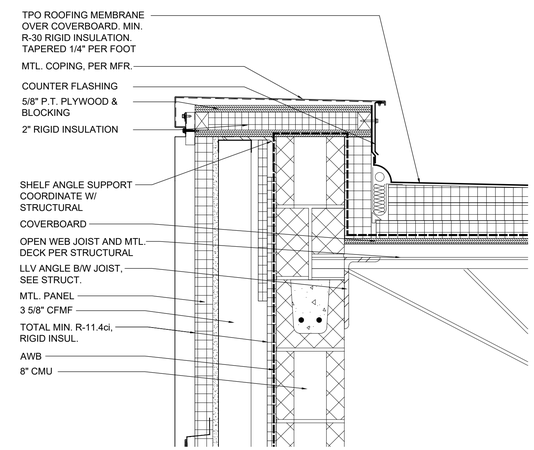

9 A750 SECTION DETAIL
SCALE:1 1/2" = 1'-0"

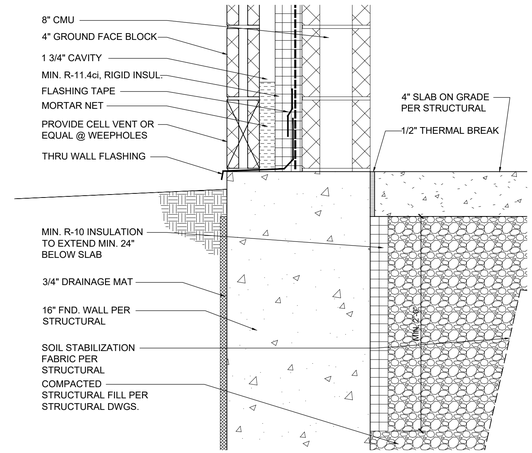

6 A750 SECTION DETAIL
SCALE:1 1/2" = 1'-0"

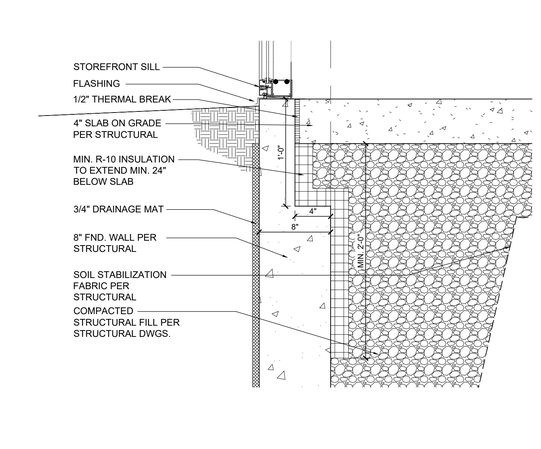

3 A750 SECTION DETAIL
SCALE:1 1/2" = 1'-0"

CJS ARCHITECTS
BUFFALO | ROCHESTER
www.cjsarchitects.com

PERMIT SET

FLINT AVE.

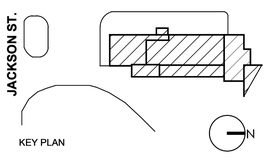

KEY PLAN

COLD SPRING CONSTRUCTION CO.

ADDITION & RENOVATION

43 JACKSON ST.
AKRON, NY14001

REV. #	DESCRIPTION	DATE

JOB NO.	2103
SCALE	1 1/2" = 1'-0"
ISSUE DATE	02/17/2022
DRAWN BY	NT
CHECKED BY	JC

THIS IS A SINGLE SHEET OF A COHESIVE SET OF CONSTRUCTION DOCUMENTS (INCLUDING DRAWINGS AND SPECIFICATIONS). INTERPRETATION OF THE INFORMATION AS PRESENTED SHOULD BE BASED ON THE ENTIRE SET OF DOCUMENTS.

DRAWING TITLE

SECTION DETAILS

A-750

PERMIT SET

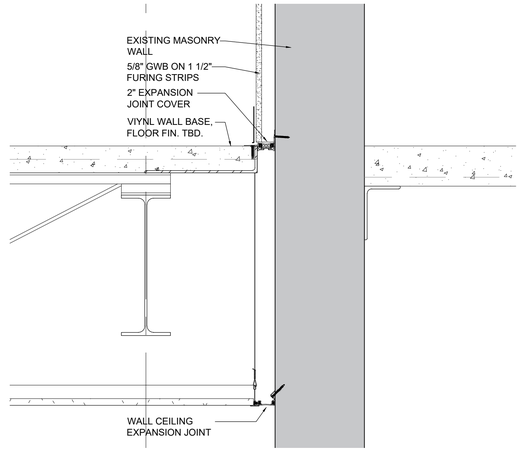

6 A751 SECTION DETAIL
SCALE:1 1/2" = 1'-0"

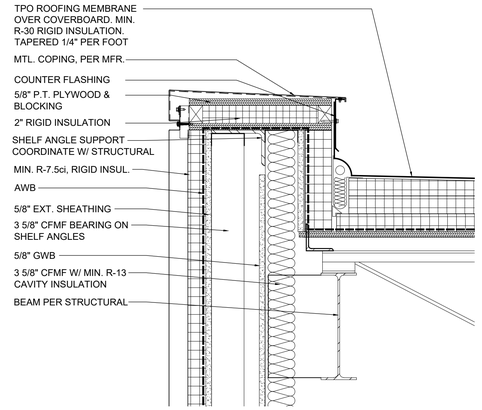

3 A751 SECTION DETAIL
SCALE:1 1/2" = 1'-0"

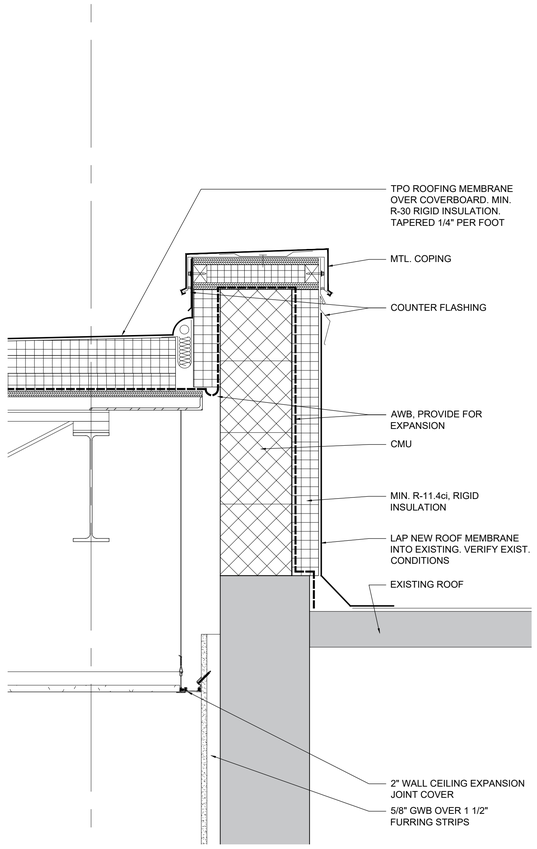

7 A751 SECTION DETAIL
SCALE:1 1/2" = 1'-0"

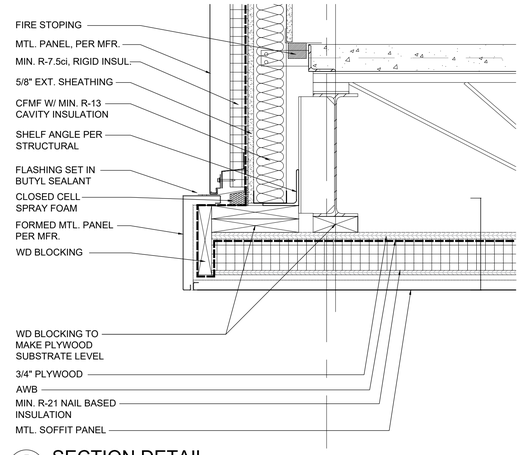

5 A751 SECTION DETAIL
SCALE:1 1/2" = 1'-0"

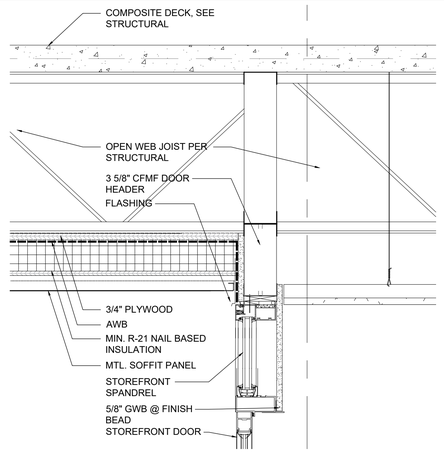

4 A751 SECTION DETAIL
SCALE:1 1/2" = 1'-0"

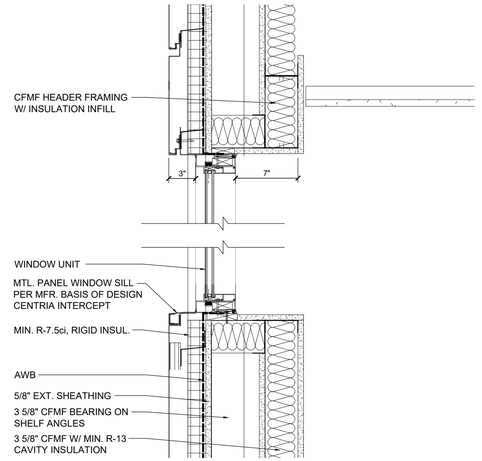

2 A751 SECTION DETAIL
SCALE:1 1/2" = 1'-0"

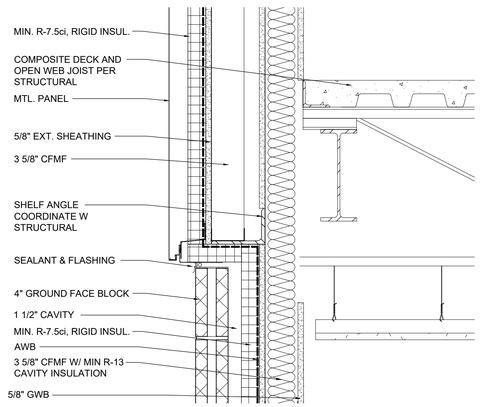

1 A751 SECTION DETAIL
SCALE:1 1/2" = 1'-0"

CJS ARCHITECTS
BUFFALO | ROCHESTER
www.cjsarchitects.com

PERMIT SET

FLINT AVE.

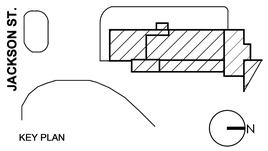

KEY PLAN

COLD SPRING CONSTRUCTION CO.

ADDITION & RENOVATION

43 JACKSON ST.
AKRON, NY14001

REV. #	DESCRIPTION	DATE

JOB NO.	2103
SCALE	1 1/2" = 1'-0"
ISSUE DATE	02/17/2022
DRAWN BY	NT
CHECKED BY	JC

THIS IS A SINGLE SHEET OF A COHESIVE SET OF CONSTRUCTION DOCUMENTS (INCLUDING DRAWINGS AND SPECIFICATIONS). INTERPRETATION OF THE INFORMATION AS PRESENTED SHOULD BE BASED ON THE ENTIRE SET OF DOCUMENTS.

DRAWING TITLE

SECTION DETAILS

A-751

PERMIT SET

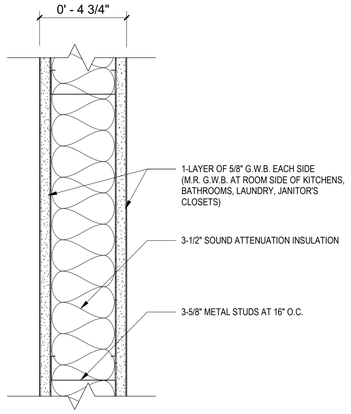

INTERIOR PARTITION

A1 — 4-7/8" (3-5/8" MTL. STUDS)
NON-RATED

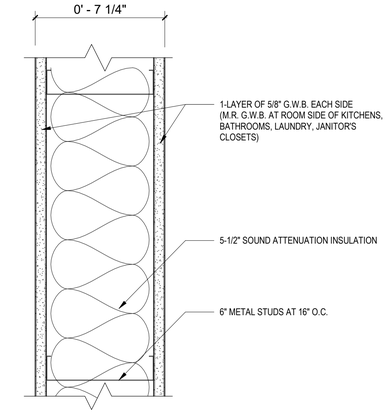

INTERIOR PARTITION

A2 — 7-1/4" (6" MTL. STUDS)
NON-RATED

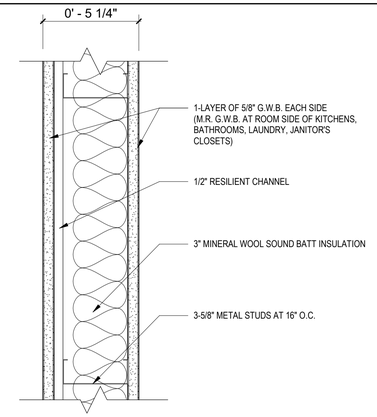

INTERIOR PARTITION

A3 — 5-3/8" (3-5/8" MTL. STUDS)
UL DESIGN NO. U419 - 1 HR RATED
STC RATING: 50
LIMITING HEIGHT: 7'-0" TO 14'-0"

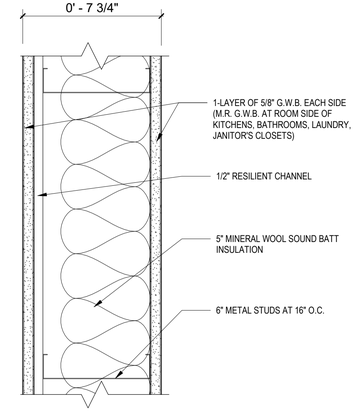

INTERIOR PARTITION

A4 — 7-3/4" (6" MTL. STUDS)
UL DESIGN NO. U419 - 1 HR RATED
STC RATING: 56
LIMITING HEIGHT: 13'-5" TO 26'-10"

WALL TYPE NOTES

1. PROVIDE CONTINUOUS BEAD OF SEALANT AT TOP AND BOTTOM STUDS OF ALL PARTITION WALLS THAT SEPERATE A CORRIDOR, HALLWAY, TENANTS, MECHANICAL CLOSETS, COMMON SPACES, AND UTILITY SPACES FROM AN OCCUPIED SPACE. AT FIRE RATED PARTITIONS, PROVIDE FIRE RATED SEALANT.
2. SEAL ALL OPENINGS, GAPS PENETRATIONS, AND JOINTS IN PARTITION TYPES AS FOLLOWS:FIRE RATED PARTITIONS; SEAL IN ACCORDANCE WITH THE REQUIREMENTS SPECIFIED FOR THROUGH PENETRATION FIRESTOP SYSTEMS AND FIRE RESISTIVE JOINT SYSTEMS.SMOKE-TIGHT PARTITIONS; SEAL COMPLETELY WITH ELASTOMERIC SEALANT, FOR LOCATION AND EXTEND OF PARTITIONS. DESIGNATED AS "SMOKE TIGHT" REFER TO CODE COMPLIANCE DRAWINGS AND OTHER LOCATIONS AS INDICATED AND REQUIRED ELSEWHERE BY THE CONTRACT DOCUMENTS.
3. FOR ALL JANITOR'S CLOSETS AND WALLS ADJACENT TO WET WALL LOCATIONS - PROVIDE 1 LAYER 5/8" MOISTURE RESISTANT G.W.B. ON WET SIDE OF WALL IN LIEU OF G.W.B. SHOWN ON PARTITION TYPE. THIS NOTE DOES NOT APPLY TO PARTION TYPES USING CEMENT BOARD.
4. FOR WALL SCHEDULED TO RECIEVE CERAMIC TILE WALL FINISH, REPLACE GYPSUM WALL BOARD BEHIND CERAMIC TILE WITH CEMENT BACKER BOARD UNITS.
5. SEE WALL SECTIONS FOR EXTERIOR WALL TYPES.
6. ALL INTERIOR PARTITION GYPSUM BOARD TO EXTEND TO UNDERSIDE OF FLOOR SLAB OR ROOF DECK ABOVE ON BOTH SIDES UNLESS OTHERWISE NOTED.

INTERIOR PARTITION

U1 — 4-1/4" (3-5/8" MTL. STUDS)
NON-RATED

INTERIOR PARTITION

U2 — 1-1/2" (7/8" HAT CHANNEL)
NON-RATED

INTERIOR PARTITION

U2 — 2-1/8" (1-1/2" HAT CHANNEL)
NON-RATED

INTERIOR SHAFT WALL

S1 — 3-1/8" (2-1/2" C-H MTL. STUDS)
UL DESIGN NO. U415 - 1 HR RATED
STC RATING: 45
LIMITING HEIGHT: 6'-6" TO 12'-4"

CMU PARTITION

C1 — 7-5/8" CMU
UL DESIGN NO. 906 - 2 HR RATED

CJS ARCHITECTS
BUFFALO | ROCHESTER
www.cjsarchitects.com

PERMIT SET

FLINT AVE.

JACKSON ST.

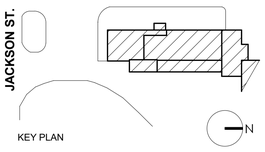

COLD SPRING CONSTRUCTION CO.

ADDITION & RENOVATION

43 JACKSON ST.
AKRON, NY14001

REV. #	DESCRIPTION	DATE

JOB NO.	2103
SCALE	As indicated
ISSUE DATE	02/17/22
DRAWN BY	NAT
CHECKED BY	JMC

THIS IS A SINGLE SHEET OF A COHESIVE SET OF CONSTRUCTION DOCUMENTS (INCLUDING DRAWINGS AND SPECIFICATIONS). INTERPRETATION OF THE INFORMATION AS PRESENTED SHOULD BE BASED ON THE ENTIRE SET OF DOCUMENTS.

DRAWING TITLE

PARTITION SCHEDULE

A-800

PERMIT SET

DOOR SCHEDULE - ALL

DOOR									FRAME			
NO.	WIDTH	HEIGHT	Door Material	Door Type	Hardware	FINISH	GLASS TYPE	FIRE RATING	TYPE	MATERIAL	FINISH	COMMENTS
FIRST FLOOR												
120	3' - 0"	7' - 0"	CWD	F		2				HM	PNT	
121	3' - 0"	7' - 0"	CWD	F		2				HM	PNT	
122	3' - 0"	7' - 0"	CWD	F		2				HM	PNT	
123A	6' - 0"	7' - 0"	ALUM.	ST			GL-2			ALUM.		
123B	3' - 0"	7' - 0"	CWD	F		2	GL-3	20 MIN.	SIDELIGHT	HM	PNT	
124A	3' - 0"	7' - 0"	CWD	F		2	GL-3	20 MIN.	SIDELIGHT	HM	PNT	
124B	3' - 0"	7' - 0"	CWD	F		2	GL-3	20 MIN.	SIDELIGHT	HM	PNT	
125	3' - 0"	7' - 0"	CWD	F		2		20 MIN.		HM	PNT	
126A	3' - 0"	7' - 0"	CWD	F		2		20 MIN.		HM	PNT	
126B	3' - 0"	7' - 0"	CWD	F		2		20 MIN.		HM	PNT	
S1-1A	3' - 0"	7' - 0"	CWD	F		2		20 MIN.		HM	PNT	
S1-1B	3' - 0"	7' - 0"	HM	F		2				HM	PNT	EXT. DOOR - INSULATED
S1-1C	3' - 0"	7' - 0"	HM	F		1		20 MIN.				
SECOND FLOOR												
208C	3' - 0"	7' - 7"	ALUM.	ST			GL-2			ALUM.		
ADDITION SECOND FLOOR												
206	3' - 0"	7' - 0"	CWD	F		2		20 MIN.		HM	PNT	
207	3' - 0"	7' - 0"	CWD	F		2		20 MIN.		HM	PNT	
208A	3' - 0"	7' - 0"	CWD	F		2		20 MIN.	SIDELIGHT	HM	PNT	
208B	3' - 0"	7' - 0"	CWD	V		2	GL-1			HM	PNT	
209	3' - 0"	7' - 0"	CWD	F		2	GL-2	20 MIN.	SIDELIGHT	HM	PNT	
210A	3' - 0"	7' - 0"	CWD	F		2		20 MIN.			PNT	
210B	3' - 0"	7' - 0"	CWD	F		2		20 MIN.		HM	PNT	
S1-2	3' - 0"	7' - 0"	CWD	F		2		20 MIN.		HM	PNT	

DOOR/ FRAME FINISH LEGEND

1 PRIMED AND PAINTED - COLOR BY INTERIOR DESIGNER
2 STAIN AND CLEAR COAT - FINISH BY INTERIOR DESIGNER

GLAZING TYPES

GL-1 FLOAT GLASS
GL-2 TEMPERED SAFETY GLASS
GL-3 FIRE RATED GLASS

DOOR MATERIAL TYPES

CWD COMPOSITE WOOD
HM HOLLOW METAL
SWD SOLID WOOD
MWD ALUM. METAL CLAD SOLID WOOD

GENERAL DOOR/ FRAME/ HARDWARE NOTES

1. HARDWARE MFR AND PRODUCTS TBD- REFER TO HARDWARE TYPE AND CORRESPONDING HEADING IN SPEC. SECTION 087100- 'DOOR HARDWARE' FOR GENERAL DESCRIPTION OF HARDWARE FUNCTION AND COMPONENTS. SUCCESSFUL BIDDER ON DOOR HARDWARE SCOPE OF WORK TO SUBMIT HARDWARE SETS AND PRODUCT DATA FOR REVIEW AND APPROVAL BY ARCHITECT, OWNER AND CONSTRUCTION MANAGER.
2. ALL HARDWARE TO BE ADA & BCNYS COMPLIANT.
3. UNIT ENTRY DOORS TO RECEIVE HARDWARE WITH A DEADBOLT INTERCONNECTED WITH THE DOOR LEVER TO ALLOW FOR EGRESS.
4. ALL FIRE RATED DOORS TO BE ADEQUATELY SMOKE SEALED PER BCNYS REQUIREMENTS.
5. ALL FIRE RATED DOORS TO BE SELF CLOSING/ LATCHING.
6. ALL DOORS INDICATED TO RECEIVE CARD READERS ARE TO BE TIED INTO THE FIRE ALARM SYSTEM & TO BE UNLOCKED UPON A FIRE ALARM SCENARIO.
7. PROVIDE MAGNETIC HOLD OPENS TIED INTO FIRE ALARM, DOOR TO CLOSE UPON ACTIVATION OF ALARM.
8. DOORS SERVING EGRESS FROM ANY SPACE SHALL NOT LOCK OR PREVENT EXITING FROM THE BUILDING.
9. ALL GLAZING WITHIN 'HAZARDOUS LOCATIONS' REQUIRE SAFETY GLAZING.

UNIT INTERIOR DOOR/ FRAME/ HARDWARE NOTES

A. HARDWARE MFR AND PRODUCTS TBD- REFER TO HARDWARE TYPE AND CORRESPONDING HEADING IN SPEC SECTION 087100- 'DOOR HARDWARE' FOR GENERAL DESCRIPTION OF HARDWARE FUNCTION AND COMPONENTS. SUCCESSFUL BIDDER ON DOOR HARDWARE SCOPE OF WORK TO SUBMIT HARDWARE SETS AND PRODUCT DATA FOR REVIEW AND APPROVAL BY ARCHITECT, OWNER AND CONSTRUCTION MANAGER.
B. ALL HARDWARE TO BE ADA & BCNYS COMPLIANT.
C. ALL UNIT DOORS (EXCLUDING ENTRY DOORS) TO BE WOOD JAMB/ HEAD DETAILS WITH FIELD APPLIED CASINGS. INTERIOR DESIGNER TO SELECT DOOR FINISH/ COLOR AND STYLE.

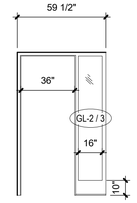

16" SIDELIGHT
WITH STANDARD STOPS

2 A-801 SIDELIGHT FRAME
1/4" = 1'-0"

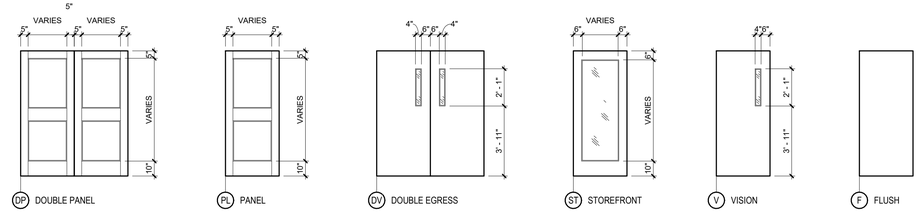

1 A-801 DOOR TYPES
1/4" = 1'-0"

CJS ARCHITECTS
BUFFALO | ROCHESTER
www.cjsarchitects.com

PERMIT SET

FLINT AVE.

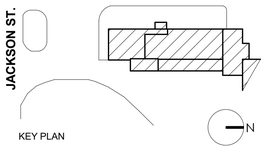

KEY PLAN

COLD SPRING
CONSTRUCTION CO.

ADDITION & RENOVATION

43 JACKSON ST.
AKRON, NY14001

REV. #	DESCRIPTION	DATE

JOB NO.	2103
SCALE	1/4" = 1'-0"
ISSUE DATE	02/17/22
DRAWN BY	NAT
CHECKED BY	JMC

THIS IS A SINGLE SHEET OF A COHESIVE SET OF CONSTRUCTION DOCUMENTS (INCLUDING DRAWINGS AND SPECIFICATIONS). INTERPRETATION OF THE INFORMATION AS PRESENTED SHOULD BE BASED ON THE ENTIRE SET OF DOCUMENTS.

DRAWING TITLE

DOOR TYPES, SCHEDULE & DETAILS

A-801

PERMIT SET

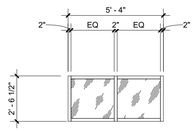

11 A-802 STOREFRONT ELEVATION K
1/4" = 1'-0"

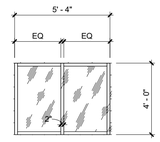

10 A-802 STOREFRONT ELEVATION J
1/4" = 1'-0"

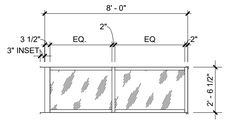

9 A-802 STOREFRONT ELEVATION I
1/4" = 1'-0"

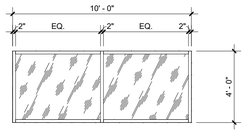

8 A-802 STOREFRONT ELEVATION H
1/4" = 1'-0"

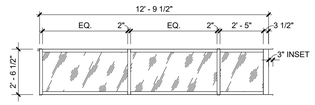

7 A-802 STOREFRONT ELEVATION G
1/4" = 1'-0"

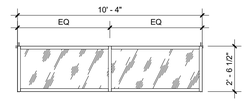

6 A-802 STOREFRONT ELEVATION F
1/4" = 1'-0"

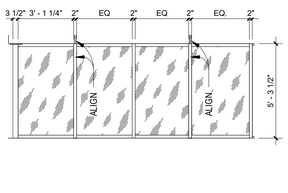

5 A-802 STOREFRONT ELEVATION E
1/4" = 1'-0"

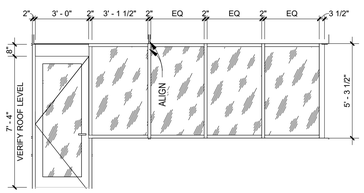

4 A-802 STOREFRONT ELEVATION D
1/4" = 1'-0"

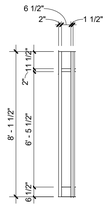

3 A-802 STOREFRONT ELEVATION C
1/4" = 1'-0"

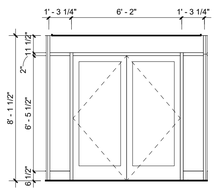

2 A-802 STOREFRONT ELEVATION B
1/4" = 1'-0"

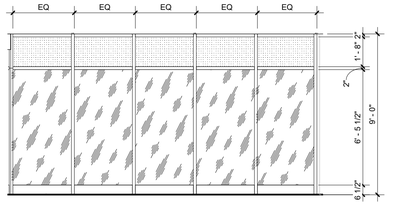

1 A-802 STOREFRONT ELEVATION A
1/4" = 1'-0"

CJS ARCHITECTS
BUFFALO | ROCHESTER
www.cjsarchitects.com

PERMIT SET

FLINT AVE.

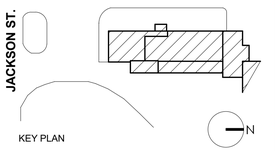

KEY PLAN

COLD SPRING CONSTRUCTION CO.

ADDITION & RENOVATION

43 JACKSON ST.
AKRON, NY14001

REV. #	DESCRIPTION	DATE

JOB NO.	2103
SCALE	1/4" = 1'-0"
ISSUE DATE	02/17/22
DRAWN BY	NAT
CHECKED BY	JMC

THIS IS A SINGLE SHEET OF A COHESIVE SET OF CONSTRUCTION DOCUMENTS (INCLUDING DRAWINGS AND SPECIFICATIONS). INTERPRETATION OF THE INFORMATION AS PRESENTED SHOULD BE BASED ON THE ENTIRE SET OF DOCUMENTS.

DRAWING TITLE

STOREFRONT TYPES AND DETAILS

A-802

PERMIT SET