SPRINKLER SCHEDULE

SYMBOL	DESCRIPTION	TEMP / K FACTOR	FINISH	LOCATIONS	NOTES
●	FLAT CONCEALED PENDENT QUICK RESPONSE	ORDINARY / 5.6K RELIABLE – G5–56 SIN RA3415	FACTORY FINISH WHITE	RESIDENTIAL AREAS, CORRIDORS, OFFICES, FITNESS ROOM	1,3,4
○	UPRIGHT QUICK RESPONSE	ORDINARY / 5.6K RELIABLE – F1FR56 SIN RA1425	BRASS	ELECTRICAL ROOMS, MECHANICAL ROOMS	1,3
◁	HORIZONTAL SIDEWALL QUICK RESPONSE	INTERMEDIATE / 5.6K RELIABLE – F1FR56 SIN RA1435	BRASS	ELEVATOR SHAFTS, TRASH CHUTES	2,3
◀	RESIDENTIAL FLAT CONCEALED HORIZONTAL SIDEWALL QUICK RESPONSE	INTERMEDIATE / 5.6K RELIABLE – RFS42 SIN RA4835	FACTORY FINISH WHITE	RESIDENTIAL AREAS	1,3,4
◖	HORIZONTAL SIDEWALL, DRY SPRINKLER, QUICK RESPONSE	ORDINARY / 5.6K VICTAULIC – DRY VICFLEX STYLE VS–1 MODEL V3510	BRASS	EXTERIOR PATIO OVERHANGS	2,4

NOTES:
1. PROVIDE ORDINARY TEMPERATURE RATED SPRINKLERS.
2. PROVIDE INTERMEDIATE TEMPERATURE RATED SPRINKLERS
3. PROVIDE SPRINKLERS IN COMPLIANCE WITH NFPA–13 (2016) TABLE 6.2.5.1 AND SECTION 8.3.2.
4. COORDINATE COVER PLATE COLOR WITH ARCHITECT PRIOR TO ORDERING AND INSTALLING.

MINIMUM DENSITY FOR FIRE SPRINKLER PIPING DESIGN

HAZARD CLASSIFICATION	DENSITY	SYSTEM TYPE	AREA OF APPLICATION	MAXIMUM SPACING	HOSE STREAM	LOCATIONS
LIGHT HAZARD	0.10	WET NFPA 13 2016 EDITION	1500 SQ FT	225 SQ FT	100 GPM	RESIDENTIAL AREAS, CORRIDORS, POOL, FITNESS ROOM, OFFICES
ORDINARY HAZARD GROUP 1	0.15	WET NFPA 13 2016 EDITION	1500 SQ FT	130 SQ FT	250 GPM	STORAGE ROOMS, MECHANICAL ROOMS, LAUNDRY, TRASH ROOMS FIRE PUMP ROOM

PIPE MATERIAL SCHEDULE

SYSTEM TYPE	PIPE MATERIAL	FITTINGS	CONNECTION
WET PIPE SYSTEM 2–INCH AND SMALLER	ASTM A53, GRADE B SCHEDULE 40 BLACK STEEL	MALLEABLE IRON	THREADED, FLANGED, OR ROLLED GROOVED ENDS
WET PIPE SYSTEM 2½–INCH AND LARGER	ASTM A53, GRADE B SCHEDULE 10 BLACK STEEL	MALLEABLE IRON	THREADED, FLANGED, OR ROLLED GROOVE ENDS
WET PIPE SYSTEM	*SCHEDULE 40 CPVC	SCHEDULE 40 CPVC	SOLVENT JOINTS
* IN CONCEALED/PROTECTED LOCATIONS ONLY.			

BACKFLOW PREVENTER SCHEDULE

MARK	FIXTURE	SIZE (IN.)	MAKE AND MODEL
BFP–1	BACKFLOW PREVENTER	8"	'WATTS' #757DCDA–OSY
NOTE: REFER TO SPECIFICATIONS FOR LISTING OF ACCEPTABLE MANUFACTURERS AND FURTHER PRODUCT REQUIREMENTS. MANUFACTURERS LISTED ABOVE WERE USED FOR BASIS OF DESIGN. REFER TO DRAWINGS FOR ADDITIONAL REQUIRED ITEMS.			

FIRE DEPARTMENT CONNECTIONS

SERVICE	TYPE	SIZE	QUANTITY	GPM
SPRINKLER INLET	SIAMESE	4"x2–½"x2–½"	1	250
NOTES: COORDINATE FINAL FDC CONNECTION TYPE AND SIZE WITH LOCAL FIRE DEPARTMENT PRIOR TO ORDERING AND INSTALLATION				

SITE WATER PRESSURES

STATIC	93	PSI
RESIDUAL	69	PSI
FLOW	2068	GPM

NOTE:
1. FLOWED FIRST HYDRANT ON 8" MAIN SOUTH OF VILLAS DRIVE EAST ON EAST SIDE OF RENSCH ROAD AND GAUGED SECOND HYDRANT SOUTH OF VILLAS DRIVE EAST ON EAST SIDE OF RENSCH ROAD (LOCATED AT END OF ROAD AT CUL–DE–SAC). FLOW TEST PERFORMED BY THE ERIE COUNTY WATER AUTHORITY ON 10/15/2018 AT 9:30 AM.
2. WATER FLOW DATA IS TO BE NO MORE THAN 12 MONTHS OLD PER NFPA 13, 2016 EDITION. PROVIDE FOR A NEW WATER FLOW FOR HYDRAULIC CALCULATIONS IF DESIGNED PAST THE 12 MONTH REQUIREMENT.

LIGHT HAZARD PIPE SCHEDULE

1 IN.	2 SPRINKLER
1–1/4 IN.	3 SPRINKLERS
1–1/2 IN.	5 SPRINKLERS
2 IN.	10 SPRINKLERS
2–1/2 IN.	30 SPRINKLERS
3 IN.	60 SPRINKLERS

ORDINARY HAZARD PIPE SCHEDULE

1 IN.	2 SPRINKLER
1–1/4 IN.	3 SPRINKLERS
1–1/2 IN.	5 SPRINKLERS
2 IN.	10 SPRINKLERS
2–1/2 IN.	20 SPRINKLERS
3 IN.	40 SPRINKLERS
4 IN.	100 SPRINKLERS

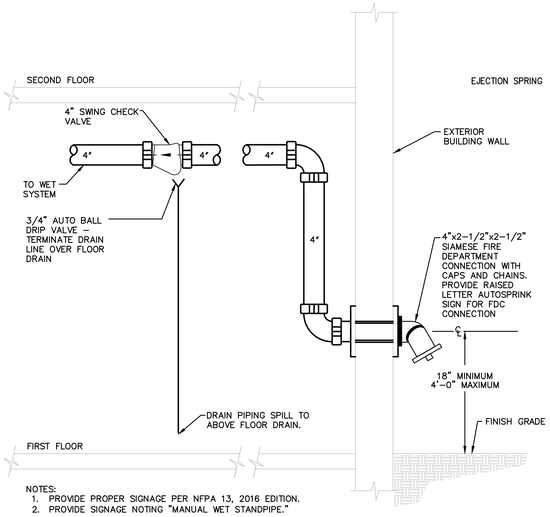

NOTES:
1. PROVIDE PROPER SIGNAGE PER NFPA 13, 2016 EDITION.
2. PROVIDE SIGNAGE NOTING "MANUAL WET STANDPIPE."

1 TYPICAL WET FIRE DEPARTMENT CONNECTION
SCALE: NOT TO SCALE

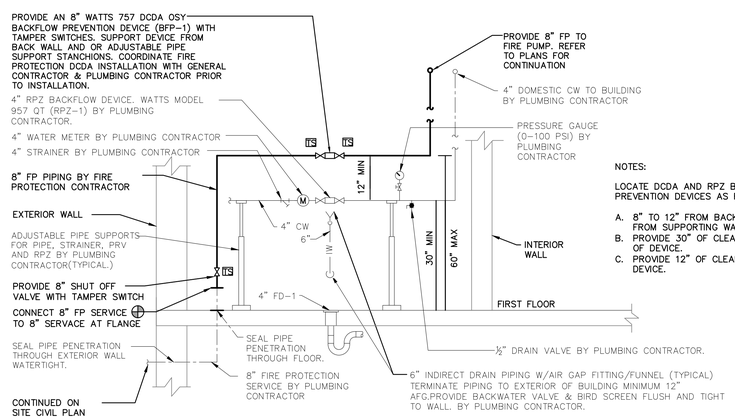

NOTES:

LOCATE DCDA AND RPZ BACKFLOW PREVENTION DEVICES AS FOLLOWS:

A. 8" TO 12" FROM BACK OF DEVICE AWAY FROM SUPPORTING WALL.
B. PROVIDE 30" OF CLEARANCE IN FRONT OF DEVICE.
C. PROVIDE 12" OF CLEARANCE ABOVE DEVICE.

2 FIRE PROTECTION SERVICE DETAIL
SCALE: N.T.S.

FIRE PROTECTION GENERAL NOTES:

A. THE CONTRACTOR SHALL BE RESPONSIBLE FOR PROPER FIELD FITTING AND QUANTITY OF WORK. CONTRACTOR SHALL TAKE FIELD MEASUREMENTS AS REQUIRED AND SHALL BE RESPONSIBLE TO REPAIR ANY EXISTING CONDITIONS DISTURBED OR DAMAGED DURING CONSTRUCTION TO MATCH EXISTING SURFACE CONDITIONS.

B. EXAMINE ALL DRAWINGS AND SPECIFICATIONS AND COORDINATE WORK WITH ALL OTHER TRADES.

C. PROVIDE ALL CUTTING, PATCHING AND FIRE STOPPING REQUIRED TO ACCOMPLISH WORK SHOWN. PATCH AND SEAL OPENINGS TO MATCH ADJACENT EXISTING WALLS, FLOORS, CEILINGS, ETC UNLESS OTHERWISE INDICATED. CONCEAL ALL WORK IN FINISHED AREAS UNLESS OTHERWISE INDICATED OR DIRECTED BY THE ARCHITECT.

D. FIELD VERIFY ALL LOCATIONS AND DIMENSIONS OF (PIPING, DUCTWORK, EQUIPMENT, STRUCTURAL ELEMENTS, ETC.) PRIOR TO COMMENCING WITH WORK. COORDINATE AND VERIFY THE INSTALLATION OF SPRINKLER EQUIPMENT AND PIPING AGAINST DUCTWORK, LIGHTING AND PIPING SHOP DRAWINGS FROM OTHER TRADES PRIOR TO COMMENCING WITH WORK. PROVIDE ALL IDENTIFIED CONFLICTS IN WRITING TO THE ARCHITECT. PROVIDE FITTINGS, TRANSITIONS, OFFSETS, ELEVATION CHANGES, ETC. TO MINIMIZE CONFLICTS WITH EXISTING CONDITIONS.

E. THE DRAWINGS ARE SCHEMATIC IN INTENT. PROVIDE AND INSTALL ALL MATERIALS, EQUIPMENT, AND LABOR NECESSARY FOR A COMPLETE INSTALLATION. ADJUST THE LOCATION OF ALL PIPING, EQUIPMENT AND CONNECTIONS TO ACCOMMODATE CONSTRUCTION CONDITIONS ENCOUNTERED; OBTAIN APPROVAL FROM THE ARCHITECT FOR ALL CHANGES. EQUIPMENT AND DEVICES SHALL BE FULLY ACCESSIBLE.

F. INSTALL ALL EQUIPMENT AND SYSTEMS IN COMPLETE COMPLIANCE WITH GOVERNING CODES AS RECOGNIZED BY THE AUTHORITY HAVING JURISDICTION, MANUFACTURERS INSTALLATION INSTRUCTIONS AND SPECIFICATIONS.

G. ALL PHYSICAL ATTRIBUTES OF SPECIFIED PRODUCTS ARE BASED ON THOSE MANUFACTURERS LISTED IN THE SPECIFICATIONS AND / OR THE EQUIPMENT SCHEDULES. THE CONTRACTOR IS RESPONSIBLE FOR ALL DESIGN CHANGES BROUGHT ABOUT BY THE USE OF ITEMS SUBMITTED BY OTHER MANUFACTURERS AT NO COST TO OWNER. THE ENGINEER HAS RESERVED THE RIGHT TO REJECT ITEMS BY OTHER MANUFACTURERS FOR REASONS INCLUDING, BUT NOT LIMITED TO, THOSE ITEMS NOT MATCHING THE PHYSICAL ATTRIBUTES OF THE MANUFACTURERS LISTED.

H. DO NOT SCALE DRAWINGS: REFER TO DIMENSIONED ARCHITECTURAL DRAWINGS TO DETERMINE EXACT LOCATION AND LENGTH OF ALL PIPING AND EQUIPMENT INSTALLED.

I. LOCATE PIPING TO PREVENT FREEZING. DO NOT LOCATE ANY WET PIPING IN EXTERIOR WALLS OR IN UNHEATED SPACES.

J. PROVIDE FIRE STOPPING MATERIAL WHERE PIPING PENETRATES WALLS AND FLOORS.

K. MAINTAIN SPACING OF SPRINKLERS IN ACCORDANCE WITH NFPA 13, 2016. PROVIDE ADDITIONAL SPRINKLERS AT ALL LOCATIONS WHERE OBSTRUCTIONS OR OTHER ELEMENTS INTERFERE WITH SPRINKLER DISCHARGE REACHING THE PROTECTED AREA.

L. COORDINATE THE LOCATION OF ALL DRAINS AND INSPECTOR'S TEST DRAINS TO PLUMBING DRAINS LOCATED IN UNFINISHED AREAS, AND SPECIFICALLY PROVIDED FOR THIS PURPOSE, OR TO AN APPROVED EXTERIOR DRAINAGE LOCATION.

M. PROVIDE ALL ACCESS PANELS NECESSARY FOR BALL DRIP, INSPECTOR'S TEST STATIONS, AND FOR ALL OTHER CONCEALED EQUIPMENT THAT REQUIRES ACCESS.

N. LOCATE SPRINKLER HEADS IN THE CENTER OR QUARTER PANEL OF CEILING PANELS IN ALL FINISHED AREAS.

O. PAINT ALL FIRE PROTECTION PIPING WHERE EXPOSED, COLOR AS SELECTED BY ARCHITECT. DO NOT PAINT SPRINKLERS.

P. PERFORM ALL WORK IN COMPLIANCE WITH NFPA 13 AND 25 (2016 VERSIONS) AND THE BUILDING CODE AND FIRE CODE OF NEW YORK STATE– (2020 VERSION), AS WELL AS WITH ALL LOCAL AND FEDERAL CODES AND ORDINANCES, OTHER APPLICABLE NFPA STANDARDS AND REFERENCED STANDARDS.

Q. PROVIDE PIPING ROUGH IN FOR ALL WORK; OBTAIN ALL NECESSARY INSPECTIONS BY AUTHORITY HAVING JURISDICTION PRIOR TO CLOSING WALLS OR CEILINGS WHERE PIPING IS CONCEALED.

R. THE DRAWINGS DO NOT INDICATE ALL OFFSETS, CHANGES IN ELEVATION, ETC., WHICH MAY BE REQUIRED. MAKE SUCH CHANGES IN THE PIPING AND LOCATION OF EQUIPMENT, ETC., TO ACCOMMODATE WORK, OBSTACLES, AND THE WORK OF OTHER CONTRACTORS.

S. PROVIDE PENDENT OR FLAT COVER CONCEALED SPRINKLERS IN ROOMS WITH SUSPENDED CEILINGS. PROVIDE UPRIGHT SPRINKLERS IN ROOMS WITHOUT SUSPENDED CEILINGS. VERIFY WITH ARCHITECTURAL REFLECTED CEILING PLANS. MATCH EXISTING SPRINKLER MANUFACTURER, TYPES, STYLES, K–FACTORS AND COLOR IN BUILDING.

T. ALL MATERIALS AND EQUIPMENT SHALL BE UL LISTED OR FM GLOBAL APPROVED.

U. PROVIDE FOR THE PROPER OFF–SITE DISPOSAL OF ALL CONSTRUCTION DEBRIS AND/OR EXCAVATED MATERIALS ASSOCIATED WITH WORK IN THIS TRADE IN COMPLIANCE WITH LOCAL, NEW YORK STATE AND FEDERAL LAWS AND REQUIREMENTS.

V. INSTALL ALL PIPING, EQUIPMENT, ETC. TO AVOID INTERFERENCE WITH THE OPERATION AND SERVICING OF ALL EQUIPMENT. DO NOT INSTALL ANYTHING ABOVE OR WITHIN 3 FT. IN FRONT OF ELECTRICAL GEAR.

W. CONTRACTOR SHALL FIELD VERIFY LOCATION OF ALL EXISTING FIRE PROTECTION MAINS AND BRANCH PIPING PRIOR TO REMOVAL AND INSTALLATION.

X. CONTRACTOR SHALL BE RESPONSIBLE FOR MODIFICATION TO ALL EXISTING FINISHES IN AREAS NOT ASSOCIATED WITH CONTRACT.

Y. THE PLANS ARE INDICATIVE OF THE END RESULT AND DO NOT INCLUDE INTERIM CONSTRUCTION NECESSARY FOR STORE OPERATION. THE FIRE PROTECTION CONTRACTOR SHALL BE RESPONSIBLE FOR ANY AND ALL CONSTRUCTION/COSTS NECESSARY FOR INTERIM CONSTRUCTION.

Z. PERFORM SITE INVESTIGATION PRIOR TO START OF WORK TO REVEAL EXISTING CONDITIONS. CONTRACTOR SHALL FIELD VERIFY LOCATION OF ALL EXISTING FIRE PROTECTION MAINS AND BRANCH PIPING PRIOR TO REMOVAL AND INSTALLATION.

AA. COORDINATE HOSE THREAD TYPES WITH THE LOCAL FIRE DEPARTMENT HAVING JURISDICTION.

AB. PROVIDE FOR THE ARRANGEMENT OF PIPING IN STAIRWELLS TO BE CLEAR OF THE AREA OF TRAVEL, AND TO NOT OBSTRUCT ANY MEANS OF EGRESS.

AC. ALL PENETRATIONS IN CONCRETE/MASONRY WALLS BELOW GRADE FOR FIRE PROTECTION PIPING SHALL BE INSTALLED WITH SLEEVES. EXACT SLEEVE SIZES AND LOCATIONS SHALL BE DETERMINED AND COORDINATED IN THE FIELD BY THE CONTRACTOR PRIOR TO PLACEMENT OF CONCRETE. NOTE: SIX INCH DIAMETER SLEEVES OR SMALLER SHALL BE POSITIONED TO AVOID CONFLICT WITH STEEL REINFORCEMENT. ANY FOUNDATION WALL SLEEVES THAT ARE LARGER THAN SIX INCH DIAMETER SHALL BE IDENTIFIED BY THE CONTRACTOR ON STEEL REINFORCEMENT SHOP DRAWINGS FOR REVIEW BY STRUCTURAL ENGINEER.

AD. PROVIDE INDICATING–TYPE SPRINKLER CONTROL VALVES.

AE. SPRINKLER CONTROL VALVES SHALL BE LOCKED IN WIDE OPEN POSITION AND PROVIDED WITH TAMPER SWITCHES WIRED TO THE BUILDING FIRE ALARM SYSTEM.

AF. PROVIDE GALVANIZED PIPE FOR ALL FIRE DEPARTMENT AND DRY PIPE SPRINKLER SYSTEM PIPING.

AG. HYDROSTATICALLY TEST ALL UNDERGROUND PIPING AT 200 PSIG FOR 2 HOURS. REPAIR LEAKS AND RE–TEST AS NECESSARY.

AH. FLUSH UNDERGROUND MAINS IN ACCORDANCE WITH FM GLOBAL DATA SHEET 3–10 PRIOR TO CONNECTING TO ABOVE GROUND SPRINKLER SYSTEM PIPING.

AI. SUBMIT APPROVED SPRINKLER PIPING DRAWINGS, WORKING PLANS, PREPARED ACCORDING TO NFPA 13, 2016 THAT HAVE BEEN APPROVED BY AUTHORITIES HAVING JURISDICTION, INCLUDING HYDRAULIC CALCULATIONS. HYDRAULIC CALCULATIONS AND SHOP DRAWINGS SHALL BE PREPARED BY A NICET LEVEL III OR HIGHER TECHNICIAN UNDER THE DIRECTION OF A REGISTERED PROFESSIONAL ENGINEER REGISTERED IN NEW YORK STATE AND SHALL BE SEALED.

AJ. CONTRACTOR SHALL PERFORM WATER FLOW TEST PRIOR TO SUBMITTING FIRE PROTECTION SHOP DRAWINGS AND HYDRAULIC CALCULATIONS. WATER FLOW TEST USED FOR THE SYSTEM DESIGN AND HYDRAULIC CALCULATIONS SHALL BE NO MORE THAN 12 MONTHS OLD PER NFPA 13, 2016 EDITION, SECTION 23.2.1.1. CONTRACTOR SHALL VERIFY WATER PRESSURES AVAILABLE AND SIZE PIPING ACCORDINGLY.

AK. SPRINKLERS MAY BE OMITTED IN THE ELEVATOR SHAFT IF THE ELEVATOR HOISTWAY IS NON–COMBUSTIBLE AND CONTAINS NO HYDRAULIC FLUID. THE ELEVATOR CAR MUST ALSO MEET THE REQUIREMENTS OF ASME A17.1.

ABBREVIATIONS

AFF	ABOVE FINISHED FLOOR
AFG	ABOVE FINISHED GRADE
BFP	BACKFLOW PREVENTER
CR	COMMERCIAL RISER ASSEMBLY
DCDA	DOUBLE CHECK DETECTOR ASSEMBLY
DN	DOWN
DRN	FIRE PROTECTION DRAIN PIPING
EA	EACH
ELEC	ELECTRIC
FACP	FIRE ALARM CONTROL PANEL
FDC	FIRE DEPARTMENT CONNECTION
FFA	FROM FLOOR ABOVE
FFB	FROM FLOOR BELOW
FP	FIRE PROTECTION
FS	FLOW SWITCH
HV	HOSE VALVE
ITC	INSPECTORS TEST CONNECTION
NIC	NOT IN CONTRACT
NTS	NOT TO SCALE
PIV	POST INDICATOR VALVE
PSI	POUNDS PER SQUARE INCH
RM	ROOF MANIFOLD
TS	TAMPER SWITCH
TFA	TO FLOOR ABOVE
TFB	TO FLOOR BELOW
VIF	VERIFY IN FIELD

NOTE: ABBREVIATIONS AND SYMBOLS ON THIS DRAWING ARE FOR REFERENCE ONLY. ALL SYMBOLS MAY NOT BE USED IN THE FOLLOWING DOCUMENTS.

SYMBOLS

—— FP ——	SPRINKLER PIPING
- - FP - -	SPRINKLER PIPING BELOW GRADE
—o	PIPE TURNED UP
—o	PIPE TURNED DOWN
—⊣	CAP
FDC ——	FIRE DEPARTMENT CONNECTION
	BACKFLOW TEST CONNECTION
FS	FLOW SWITCH
TS	TAMPER SWITCH
	GATE VALVE
	CHECK VALVE
	STRAINER
ITC	INSPECTORS TEST CONNECTION
	PRESSURE GAUGE

BE Project No. 220107

BUFFALO ENGINEERING, P.C.
MECHANICAL/ELECTRICAL ENGINEERS
4245 UNION RD. BUFFALO, NY 14225
[P] 716.633.5300 [F] 716.633.5598
WWW.BUFFALOENGINEERING.COM

Kideney Architects
Kideney Architects, P.C.
ARCHITECTS | PLANNERS
INTERIORS | LANDSCAPE DESIGN
143 Genesee Street
Buffalo, New York 14203
716.249.3837 | kideney.com

STATE OF NEW YORK · BRIAN P. ZINTER · 099870 · LICENSED PROFESSIONAL ENGINEER

STAMP AND SIGNATURE:

CONSULTANT:

1265 SWEET HOME RD. DEVELOPMENT
1265 SWEET HOME RD.

BID SET

FIRE PROTECTION LEGENDS, SCHEDULES, AND DETAILS

WARNING:
ANY ALTERATIONS TO THIS DOCUMENT NOT CONFORMING TO SECTION 7209, NEW YORK STATE EDUCATION LAW ARE STRICTLY PROHIBITED

COPYRIGHT: 2020KIDENEY ARCHITECTS, PC
All rights reserved. No part of this work may be reproduced or copied in any form or by any means - graphic, electronic, or mechanical, including photocopying, recording, taping, or information and retrieval systems - without written permission of the ARCHITECT.

No.	DATE	DESCRIPTION

REVISIONS:

DGI	ATA
CHECKED BY:	DRAWN BY:
2020072.00	06/25/2021
KA PROJECT NO:	DATE:

FP001
DRAWING NO:

3/3/2021 3:19:37 PM

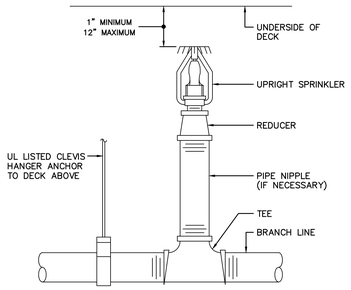

1 TYPICAL UPRIGHT SPRINKLER HEAD
SCALE: N.T.S.

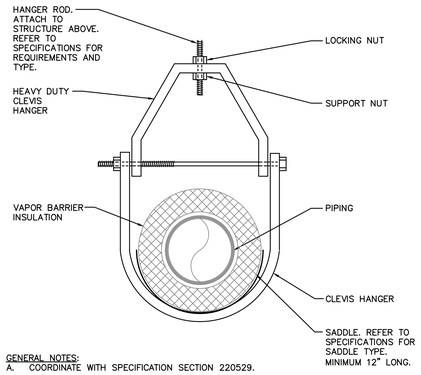

GENERAL NOTES:
A. COORDINATE WITH SPECIFICATION SECTION 220529.

2 TYPICAL HANGER
SCALE: N.T.S.

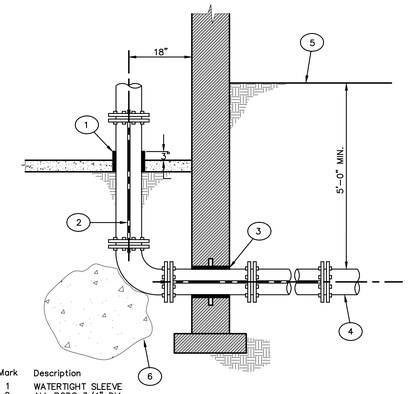

Mark	Description
1	WATERTIGHT SLEEVE
2	ALL RODS 3/4" DIA.
3	SLEEVE AND SEAL
4	FIRE MAIN
5	FINISHED GRADE
6	THRUST BLOCK

3 FIRE MAIN ENTRANCE
SCALE: N.T.S.

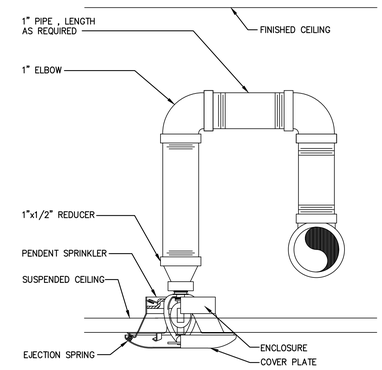

4 TYPICAL GOOSENECK DETAIL
SCALE: N.T.S.

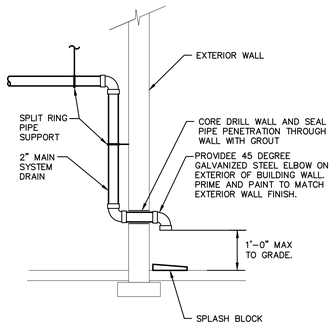

5 SPLASH BLOCK DETAIL
SCALE: N.T.S.

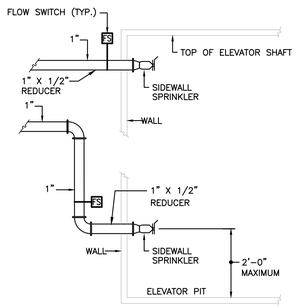

NOTES:
1. PROVIDE FLOW SWITCH FOR ALL ELEVATOR SPRINKLERS.
2. COORDINATE SPRINKLER REQUIREMENTS WITH AUTHORITY HAVING JURISDICTION AND ELEVATOR REQUIREMENTS.
3. PROVIDE FOR ALL WIRING FROM TAMPER AND FLOW SWITCHES TO FIRE ALARM CONTROL PANEL.

6 ELEVATOR SHAFT SPRINKLER
SCALE: N.T.S.

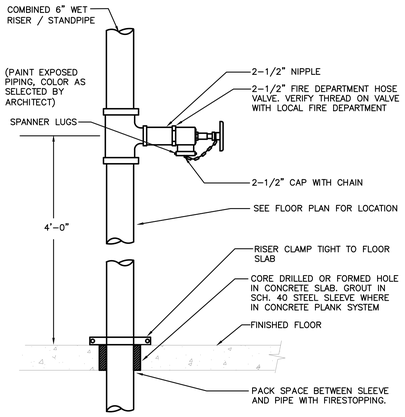

7 STANDPIPE HOSE CONNECTION
SCALE: N.T.S.

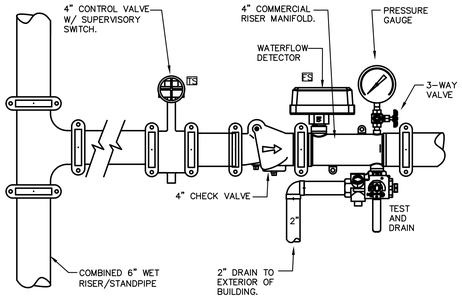

NOTE:
A. PROVIDE PRESSURE RESTRICTING VALVES ON FLOORS WHERE THE WATER PRESSURE EXCEEDS 175 PSI.

B. LOCATE FLOOR CONTROL RISER MANIFOLD ASSEMBLY BELOW CEILING IN ACCESSIBLE LOCATION AS CLOSE TO CEILING AS POSSIBLE FREE OF OBSTRUCTIONS AND ALLOWS FOR MEANS OF EGRESS. LOCATE NO MORE THAN 7'-0" ABOVE FINISHED FLOOR. COORDINATE LOCATIONS WITH GENERAL CONTRACTOR, ARCHITECT AND OTHER TRADES PRIOR TO INSTALLATION.

8 FLOOR CONTROL RISER MANIFOLD
SCALE: N.T.S.

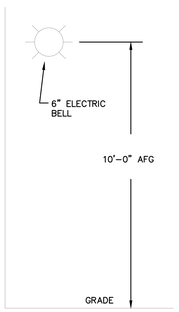

9 ELECTRIC BELL DETAIL
SCALE: N.T.S.

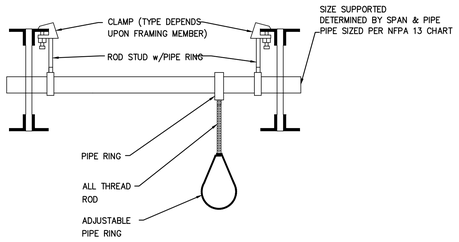

TRAPEZE HANGER
NOTE: USE WHERE SPANNING BETWEEN STRUCTURAL MEMBERS.

11 TRAPEZE HANGER DETAIL
SCALE: N.T.S.

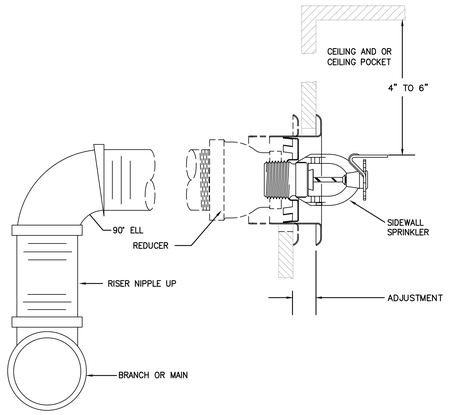

13 HORIZONTAL SIDEWALL SPRINKLER
SCALE: N.T.S.

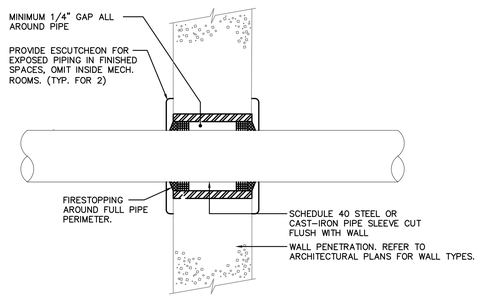

KEYED NOTES:
1. FOR GYPSUM BOARD WALLS PROVIDE MIN. 16 GAUGE GALV. STEEL SLEEVE W/ LOCK-TYPE LONGITUDINAL SEAM

GENERAL NOTES:
A. PROVIDE APPLICABLE UL LISTED THROUGH-PENETRATION FIRESTOP SYSTEM FOR RATED WALL ASSEMBLIES. REFER TO 078413 "PENETRATION FIRESTOPPING" FOR MATERIALS, RATINGS AND ARCHITECTURAL SCHEDULES.

15 FIRE RATED PENETRATIONS
SCALE: N.T.S.

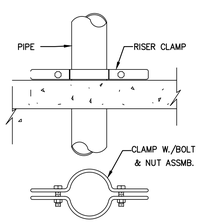

10 TYPICAL RISER CLAMP
SCALE: N.T.S.

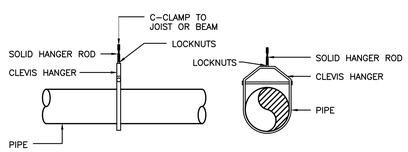

12 CLEVIS HANGER DETAIL
SCALE: N.T.S.

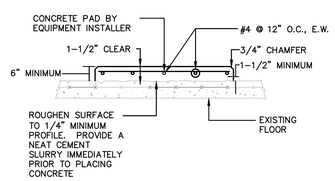

14 HOUSEKEEPING PAD DETAIL
SCALE: N.T.S.

Kideney Architects
Kideney Architects, P.C.
ARCHITECTS | PLANNERS
INTERIORS | LANDSCAPE DESIGN
143 Genesee Street
Buffalo, New York 14203
716.249.3837 | kideney.com

STATE OF NEW YORK · BRIAN P. ZINTEL · 099870 · LICENSED PROFESSIONAL ENGINEER

STAMP AND SIGNATURE:

CONSULTANT:

1265 SWEET HOME RD. DEVELOPMENT

1265 SWEET HOME RD.

BID SET

FIRE PROTECTION DETAILS

WARNING:
ANY ALTERATIONS TO THIS DOCUMENT NOT CONFORMING TO SECTION 7307, NEW YORK STATE EDUCATION LAW ARE STRICTLY PROHIBITED

COPYRIGHT 2020KIDENEY ARCHITECTS, PC
All rights reserved. No part of this work may be reproduced or copied in any form or by any means - graphic, electronic, or mechanical, including photocopying, recording, taping, or information and retrieval systems - without written permission of the ARCHITECT

No.	DATE	DESCRIPTION

REVISIONS

DGI	ATA
CHECKED BY:	DRAWN BY:
2020072.00	06/25/2021
KA PROJECT NO.	DATE

BE Project No. 220107

BUFFALO ENGINEERING, P.C.
MECHANICAL/ELECTRICAL ENGINEERS
4245 UNION RD. BUFFALO, NY 14225
[P] 716.633.5300 [F] 716.633.5598
WWW.BUFFALOENGINEERING.COM

FP002

DRAWING NO.

3/3/2021 3:19:37 PM

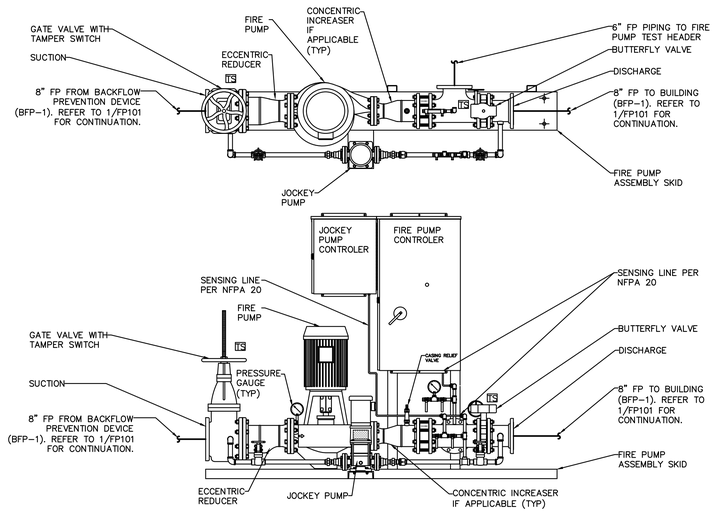

NOTES:
1. PROVIDED BYPASS WITH SHUTOFFS AND TAMPER SWITCHES. (NOT SHOWN).
2. BASIS OF DESIGN: ARMSTRONG MODEL # VIL-6X4LB-F-60 HP PACKAGED FIRE PUMP SYSTEM.

1 FIRE PUMP DETAIL
SCALE: N.T.S.

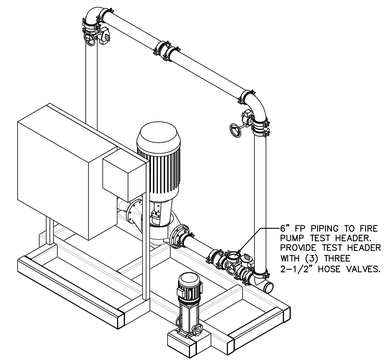

2 FIRE BOOSTER PUMP - ISOMETRIC VIEW
SCALE: NOT TO SCALE

FIRE BOOSTER PUMP

BASIS OF DESIGN	PUMP TYPE	GPM	TDH (PSI)	MOTOR HP	NOMINAL MOTOR RPM	VOLTAGE/PHASE	NOTES
ARMSTRONG PUMP SYSTEMS. ELECTRIC. MODEL # VIL-6X4LB-F-60 HP	ELECTRIC MOTOR VERTICAL INLINE	750	80	60	3600	208/3	ALL ITEMS BELOW
ARMSTRONG SERIES MODEL # 4700-VMS-03:07-2P-1.5 HP JOCKEY PUMP	CENTRIFUGAL	7.5	90	1-1/2	3500	208/3	PROVIDE WITH SKID MOUNTED FIRE BOOSTER PUMP SYSTEM

PROVIDE THE FOLLOWING ACCESSORIES:
1. VERTICAL IN-LINE FIRE PUMP
2. SUCTION OS&Y GATE VALVE
3. DISCHARGE BUTTERFLY VALVE
4. SILENT CHECK VALVE
5. SUCTION AND DISCHARGE PRESSURE GAUGES - 3.5" GAUGES WITH 1/4" GAUGE VALVE - FLUID FILLED
6. VENTURI FLOW METER
7. AIR RELIEF VALVE
8. COMMON STRUCTURAL STEEL BASE
9. SENSING LINE
10. TEST TEE
11. JOCKEY PUMP
12. FIRE PUMP CONTROLLER - ALL FACTORY WIRED WITH SOLID STATE REDUCED VOLTAGE STARTER SET AT 65% OF LOCK ROTOR AMPERES AND INTEGRAL LOCKABLE DISCONNECT.
13. JOCKEY PUMP CONTROLLER - ALL FACTORY WIRED
14. OVERCURRENT PROTECTION INTEGRAL WITH PANELS
15. RELIEF VALVE (CIRCULATION RELIEF VALVE) SHALL BE INSTALLED ON PUMP DISCHARGE BEFORE DISCHARGE CHECK VALVE. PIPE BACK INTO THE SUCTION SIDE OF PUMP. A MINIMUM OF 5 PIPE DIAMETERS UPSTREAM OF PUMP SUCTION.
16. SEE FIRE PUMP DETAIL FOR ADDITIONAL INFORMATION
17. FITTINGS SHALL BE ANSI.
18. HYDROSTATICALLY TEST AT FACTORY AT 200 PSI AND PROVIDE A FIELD ACCEPTANCE TEST.
19. WARRANTY: 12 MONTHS FROM STARTUP (WHICHEVER IS LONGER).

NOTES:
1. PROVIDE A UL LISTED, FM APPROVED FIRE PUMP SKID MOUNTED, FACTORY ASSEMBLED PIPED, AND WIRED SYSTEM. FIRE PUMP, VALVES, ETC., SHALL BE CONNECTED TO THE NEAREST BUILDING FIRE ALARM CONTROL PANEL FRO SUPERVISION AND ALARM.
2. SYSTEM SHALL BE IN ACCORDANCE WITH NFPA-20, 2016 EDITION.
3. ALL TAMPER SWITCHES TO BE FACTORY MOUNTED BY PACKAGER.
4. THE CONTRACTOR MAY BUILD THEIR OWN FIRE PUMP SYSTEM IN LIEU OF THE PACKAGED SYSTEM SPECIFIED. HOWEVER ALL COMPONENTS INCLUDED IN THE FACTORY SKID SYSTEM MUST BE PROVIDED AND THE ENTIRE ASSEMBLY MUST STILL COMPLY WITH NFPA 20 AND UL LISTED. THE FIRE PROTECTION CONTRACTOR IS RESPONSIBLE FOR COMPENSATING THE ELECTRICAL CONTRACTOR FOR ANY ADDITIONAL MATERIAL & LABOR REQUIRED TO PROVIDE POWER TO THE SYSTEM.
5. IF THE CONTRACTOR SHALL PROVIDE, A SEPARATE 1/4" PER FOOT SCALE DRAWING OF THE FIRE PUMP ROOM MUST BE SUBMITTED PRIOR TO ORDERING AND INSTALLING EQUIPMENT. THIS DRAWING MUST SHOW ALL EQUIPMENT THAT WILL BE LOCATED IN THE ROOM, REGARDLESS OF TRADE. ALONG WITH REQUIRED SERVICE CLEARANCES. THE FIRE PROTECTION DRAWING SHALL BE STAMPED AND SIGNED BY A PROFESSIONAL ENGINEER LICENSED IN THE STATE OF THIS PROJECT.

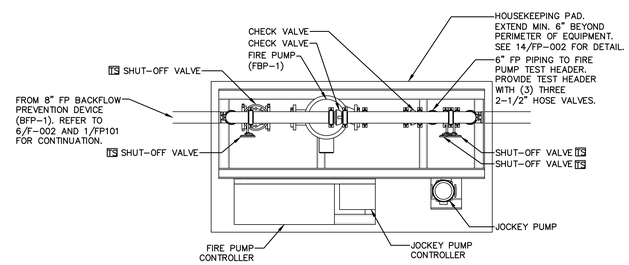

3 FIRE BOOSTER PUMP - TOP VIEW
SCALE: NOT TO SCALE

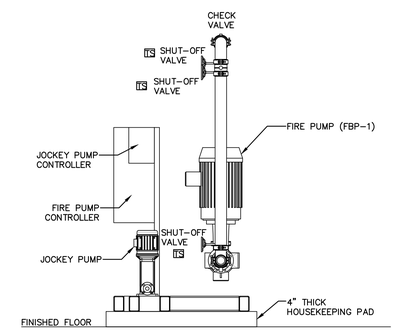

4 FIRE BOOSTER PUMP - SIDE VIEW
SCALE: NOT TO SCALE

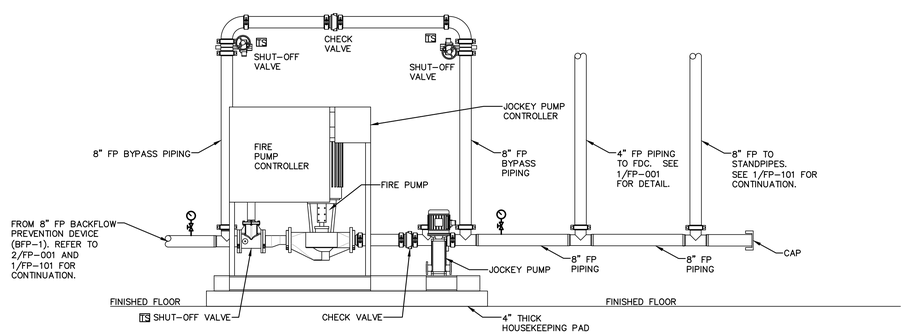

5 FIRE BOOSTER PUMP - FRONT VIEW
SCALE: NOT TO SCALE

Kideney Architects
Kideney Architects, P.C.
ARCHITECTS | PLANNERS
INTERIORS | LANDSCAPE DESIGN
143 Genesee Street
Buffalo, New York 14203
716.249.3837 | kideney.com

STATE OF NEW YORK · BRIAN P. ZINTER · 099870 · LICENSED PROFESSIONAL ENGINEER

STAMP AND SIGNATURE:

CONSULTANT:

1265 SWEET HOME RD. DEVELOPMENT
1265 SWEET HOME RD.

BID SET

FIRE PUMP SCHEDULE AND DETAILS

WARNING:
ANY ALTERATIONS TO THIS DOCUMENT NOT CONFORMING TO SECTION 7307, NEW YORK STATE EDUCATION LAW ARE STRICTLY PROHIBITED
COPYRIGHT: 2020KIDENEY ARCHITECTS, PC
All rights reserved. No part of this work may be reproduced or copied in any form or by any means - graphic, electronic, or mechanical, including photocopying, recording, taping, or information and retrieval systems - without written permission of the ARCHITECT.

No.	DATE	DESCRIPTION

REVISIONS:

DGI (CHECKED BY)	ATA (DRAWN BY)
2020072.00 (KA PROJECT NO.)	06/25/2021 (DATE)

BE Project No. 220107

BUFFALO ENGINEERING, P.C.
MECHANICAL/ELECTRICAL ENGINEERS
4245 UNION RD. BUFFALO, NY 14225
[P] 716.633.5300 [F] 716.633.5598
WWW.BUFFALOENGINEERING.COM

FP003
DRAWING NO.

3/3/2021 3:19:37 PM

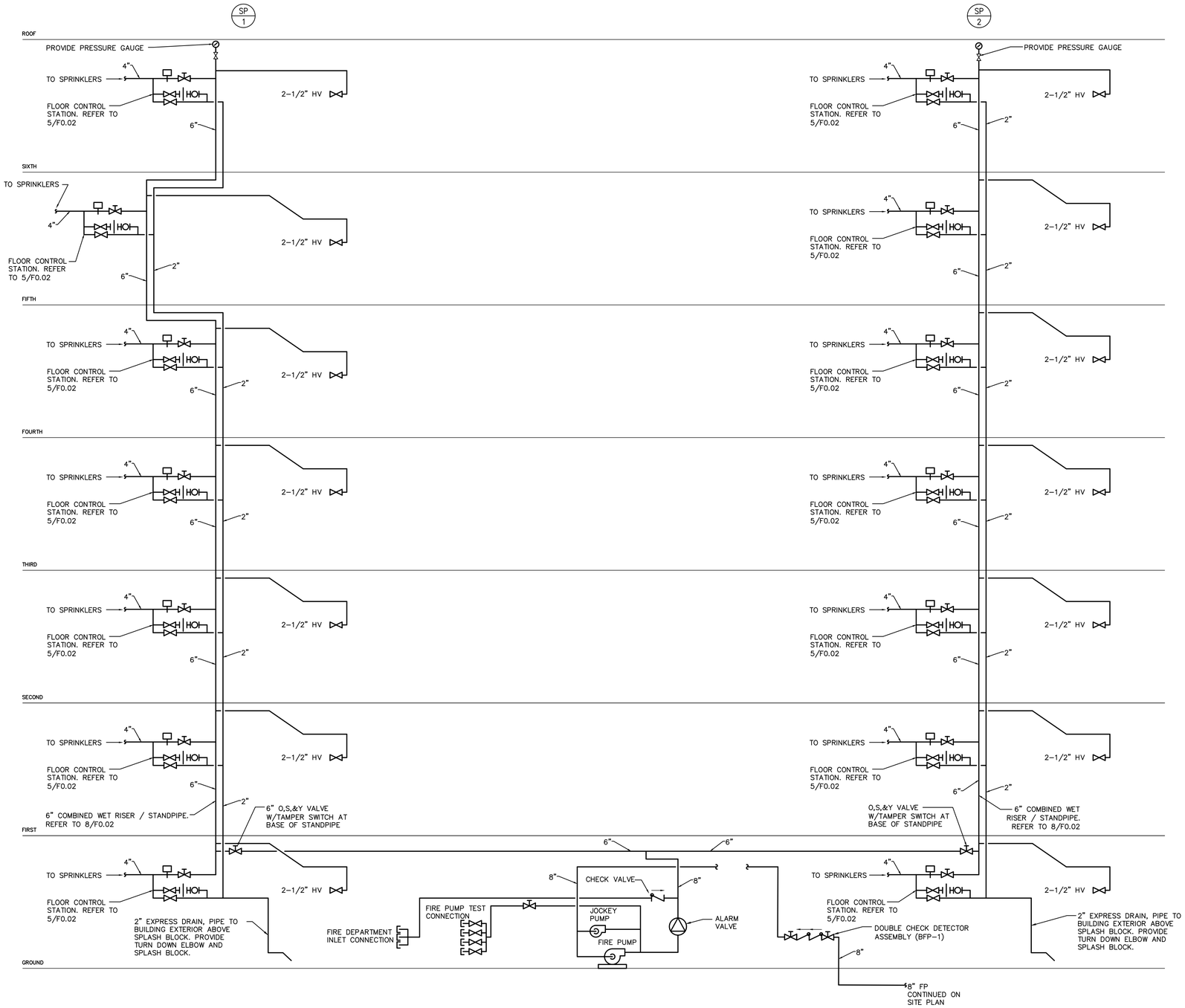

1 FIRE PROTECTION RISER DIAGRAM
SCALE: NOT TO SCALE

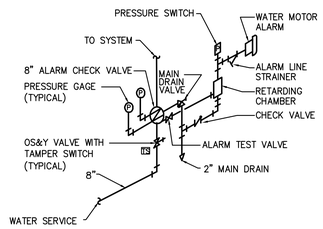

2 ALARM CHECK VALVE DETAIL
SCALE: NOT TO SCALE

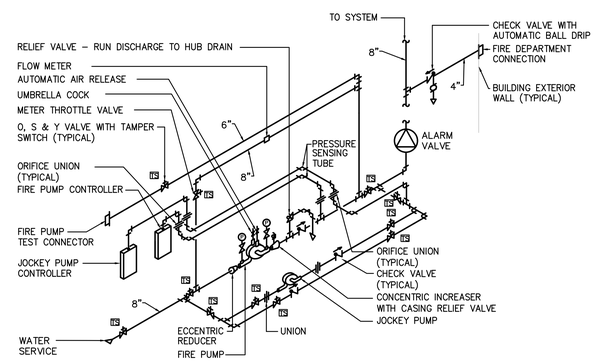

3 FIRE PUMP PIPING & CONTROL DETAIL
SCALE: NOT TO SCALE

BE Project No. 220107

BUFFALO ENGINEERING, P.C.
MECHANICAL/ELECTRICAL ENGINEERS
4245 UNION RD. BUFFALO, NY 14225
[P] 716.633.5300 [F] 716.633.5598
WWW.BUFFALOENGINEERING.COM

Kideney Architects
Kideney Architects, P.C.
ARCHITECTS | PLANNERS
INTERIORS | LANDSCAPE DESIGN
143 Genesee Street
Buffalo, New York 14203
716.249.3837 | kideney.com

STATE OF NEW YORK · BRIAN P. ZINTEL · 099870 · LICENSED PROFESSIONAL ENGINEER

STAMP AND SIGNATURE:

CONSULTANT:

1265 SWEET HOME RD. DEVELOPMENT

1265 SWEET HOME RD.

BID SET

FIRE PROTECTION RISER DIAGRAMS

WARNING:
ANY ALTERATIONS TO THIS DOCUMENT NOT CONFORMING TO SECTION 7307, NEW YORK STATE EDUCATION LAW ARE STRICTLY PROHIBITED

COPYRIGHT 2020KIDENEY ARCHITECTS, PC
All rights reserved. No part of this work may be reproduced or copied in any form or by any means - graphic, electronic, or mechanical, including photocopying, recording, taping, or information and retrieval systems - without written permission of the ARCHITECT.

No.	DATE	DESCRIPTION

REVISIONS

CHECKED BY: DGI	DRAWN BY: ATA
KA PROJECT NO.: 2020072.00	DATE: 06/25/2021

DRAWING NO.: FP004

3/3/2021 3:19:37 PM

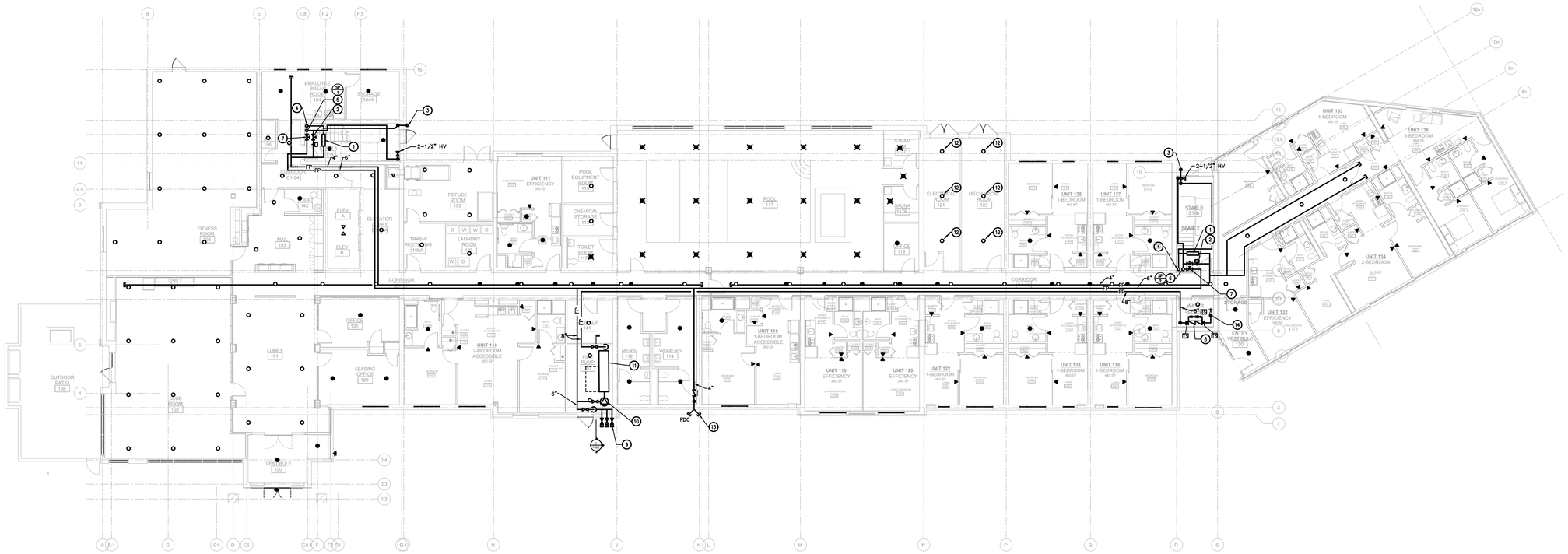

1 GROUND FLOOR OVERALL PLAN
SCALE: 3/32" = 1'-0"

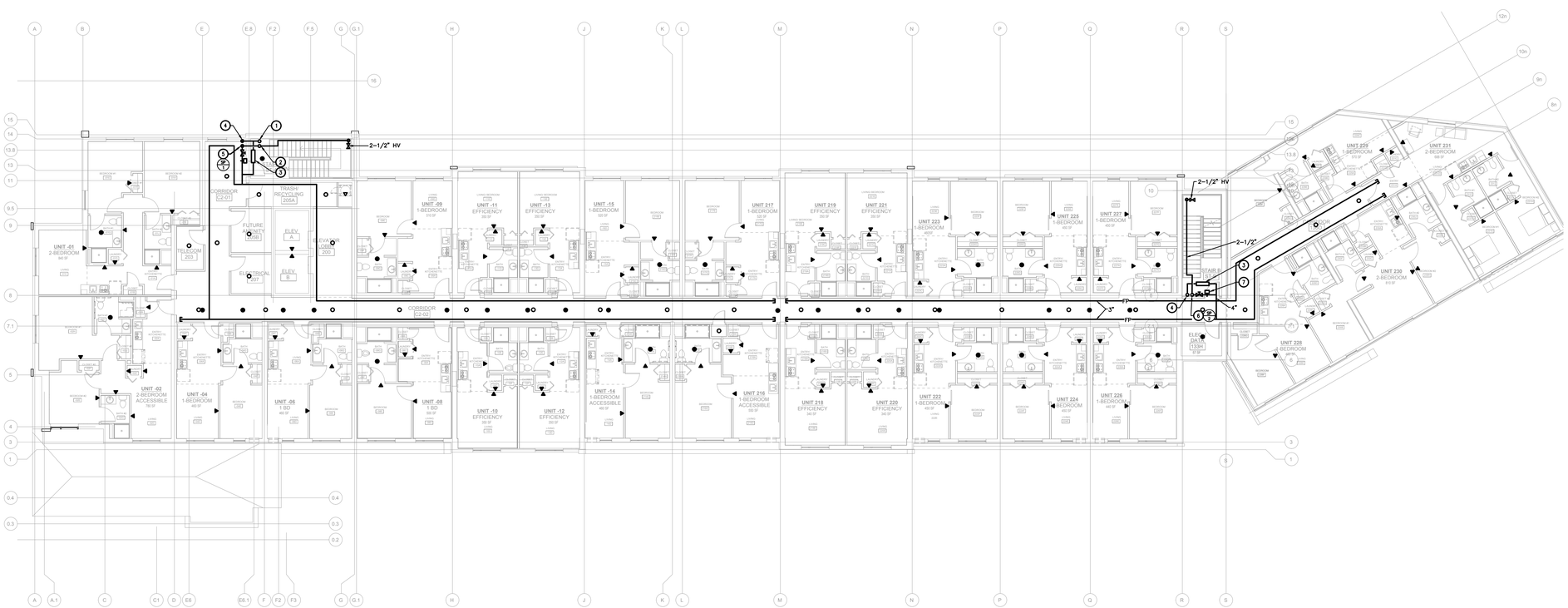

2 2ND THRU 6TH FLOOR OVERALL PLAN
SCALE: 3/32" = 1'-0"

GENERAL NOTES:

A. CONTRACTOR SHALL COORDINATE WITH ALL TRADES FOR OBSTRUCTIONS AND PROVIDE ALL ADDITIONAL PIPING AND SPRINKLER HEADS REQUIRED TO PROVIDE APPROPRIATE COVERAGE. CONTRACTOR SHALL BE RESPONSIBLE FOR COORDINATING WITH FINAL CEILING PLAN, MECHANICAL EQUIPMENT, AND LIGHTING LAYOUT. CONTRACTOR SHALL BE RESPONSIBLE FOR ALL SPRINKLER MODIFICATIONS REQUIRED FOR FINAL CEILING PLAN.

B. CONTRACTOR SHALL COORDINATE ALL PIPE ROUTING WITH ARCHITECT, ENGINEER, AND OWNER PRIOR TO INSTALLATION. CONTRACTOR SHALL PROVIDE ALL PIPING MATERIALS AND LABOR TO ACHIEVE DESIRED FINISH.

C. FINAL PIPE SIZES AND LAYOUT SHALL BE DETERMINED BY CONTRACTOR.

D. CONTRACTOR SHALL TAKE CARE NOT TO DAMAGE EXISTING FINISHES ASSOCIATED IN AREAS NOT IN CONTRACT. CONTRACTOR SHALL BE RESPONSIBLE FOR MODIFICATION TO ALL EXISTING FINISHES IN AREAS NOT ASSOCIATED WITH CONTRACT.

C. PROVIDE CORE DRILL AND FIRE STOPPING AT ALL FLOOR AND RATED WALL PENETRATIONS. REFER TO ARCHITECTURAL DOCUMENTS FOR LOCATIONS OF RATED ASSEMBLIES. COORDINATE CORE DRILL REQUIREMENTS WITH STRUCTURAL DOCUMENTS.

D. SPRINKLERS LOCATED IN ACOUSTICAL CEILING TILES SHALL BE CENTERED WITHIN THE TILE AND GRID WHERE POSSIBLE.

E. PROVIDE HYDRAULIC CALCULATIONS FOR ALL AREAS CLASSIFIED AS EXTRA HAZARD GROUP 2 OCCUPANCIES.

DRAWING NOTES:

1. PROVIDE 2" TEST AND DRAIN.
2. PROVIDE 4" O,S&Y VALVE W/TAMPER SWITCH AND FLOW SWITCH. REFER TO 5/F0.02.
3. PROVIDE 2" EXPRESS DRAIN TO BLDG EXTERIOR.
4. PROVIDE 2" EXPRESS DRAIN.
5. PROVIDE 6" FP COMBINED STANDPIPE #1 (SP-1).
6. PROVIDE 6" FP COMBINED STANDPIPE #2 (SP-2).
7. PROVIDE 6" O,S&Y VALVE W/ TAMPER SWITCH AT BASE OF STANDPIPE.
8. PROVIDE 8" DOUBLE CHECK DETECTOR BACKFLOW ASSEMBLY. COORDINATE WITH PLUMBING RPZ INSTALLATION AND OTHER TRADES PRIOR TO INSTALLATION.
9. PROVIDE FIRE PUMP TEST CONNECTION.
10. PROVIDE 8" ALARM VALVE.
11. PROVIDE SKID MOUNTED FIRE PUMP, JOCKEY PUMP AND CONTROLLER. REFER TO SCHEDULES AND DETAILS FOR ADDITIONAL INFORMATION.
12. PROVIDE INTERMEDIATE 200° RATED QUICK RESPONSE UPRIGHT SPRINKLERS.
13. PROVIDE 4" X 2-1/2" X 2"-1/2" FIRE DEPARTMENT INLET CONNECTION.
14. 8" FP FROM BELOW. REFER TO 1/P1.1 FOR CONTINUATION.

Kideney Architects

Kideney Architects, P.C.
ARCHITECTS | PLANNERS
INTERIORS | LANDSCAPE DESIGN
143 Genesee Street
Buffalo, New York 14203
716.249.3837 | kideney.com

STATE OF NEW YORK · BRIAN P. ZINTER · 098870 · LICENSED PROFESSIONAL ENGINEER

STAMP AND SIGNATURE:

CONSULTANT:

1265 SWEET HOME RD. DEVELOPMENT

1265 SWEET HOME RD.

BID SET

FIRE PROTECTION 1ST THROUGH 6TH FLOOR PLANS

WARNING:

ANY ALTERATIONS TO THIS DOCUMENT NOT CONFORMING TO SECTION 7307, NEW YORK STATE EDUCATION LAW ARE STRICTLY PROHIBITED

COPYRIGHT 2020KIDENEY ARCHITECTS, PC
All rights reserved. No part of this work may be reproduced or copied in any form or by any means - graphic, electronic, or mechanical, including photocopying, recording, taping, or information and retrieval systems - without written permission of the ARCHITECT.

No.	DATE	DESCRIPTION

REVISIONS:

DGI	ATA
CHECKED BY:	DRAWN BY:
2020072.00	06/25/2021
KA PROJECT NO:	DATE:

BE Project No. 220107

BUFFALO ENGINEERING, P.C.
MECHANICAL/ELECTRICAL ENGINEERS
4245 UNION RD, BUFFALO, NY 14225
[P] 716.633.5300 [F] 716.633.5598
WWW.BUFFALOENGINEERING.COM

FP101

DRAWING NO.

3/3/2021 3:19:37 PM