PORT HARDENING PROGRAM 2020

FOR

THE BUFFALO AND FORT ERIE PUBLIC BRIDGE AUTHORITY

JUNE 2020

CROSSING PATHS BUILDING FUTURES

THE PEACE BRIDGE

PREPARED BY:

GPI

Greenman-Pedersen, Inc.
403 Main Street, Suite 330
Buffalo, NY 14203

BUFFALO AND FORT ERIE PUBLIC BRIDGE AUTHORITY

PORT HARDENING PROGRAM 2020

GPI Engineering Design Planning Construction Management
716-633-4844 GPINET.COM
Greenman-Pedersen, Inc.
403 Main Street, Suite 330
Buffalo, NY 14203

TITLE SHEET

DESIGNED: N.A.	DRAWN: N.A.	CHECKED: N.A.
SCALE: N.T.S.	DRAWING G-1	SHEET NO. 1 OF 23
DATE: JUNE 2020		

INDEX OF DRAWINGS

SHEET	DRAWING	TITLE
1	G-1	TITLE SHEET
2	G-2	INDEX OF DRAWINGS AND GENERAL NOTES (1 OF 2)
3	G-3	INDEX OF DRAWINGS AND GENERAL NOTES (2 OF 2)
4	GP-1	GENERAL PLAN
5	SV-1	SURVEY CONTROL
6	MPT-1	TRAFFIC CONTROL PLAN - STAGE 1
7	MPT-2	TRAFFIC CONTROL PLAN - STAGE 2
8	MPT-3	TRAFFIC CONTROL PLAN - STAGE 3/STAGE 4
9	L-1	CURB/STRIPING LAYOUT
10	SP-1	PERMANENT SIGN LAYOUT AND DETAILS
11	M-1	MEDIAN GEOMETRY LAYOUT
12	CS-1	CURB/SIDEWALK DETAILS (1 OF 5)
13	CS-2	CURB/SIDEWALK DETAILS (2 OF 5)
14	CS-3	CURB/SIDEWALK DETAILS (3 OF 5)
15	CS-4	CURB/SIDEWALK DETAILS (4 OF 5)
16	CS-5	CURB/SIDEWALK DETAILS (5 OF 5)
17	OG-1	OVERHEAD SIGN STRUCTURE DETAILS (1 OF 3)
18	OG-2	OVERHEAD SIGN STRUCTURE DETAILS (2 OF 3)
19	OG-3	OVERHEAD SIGN STRUCTURE DETAILS (3 OF 3)
20	AG-1	AUTOMATED SECURITY GATE DETAILS
21	U-1	UNDERGROUND UTILITY CONDUIT PLAN
22	U-2	UTLITY WIRING AND ELECTRIC/COMMUNICATION CABINETS
23	CR-1	CONCRETE OVERLAY REPAIR [SUPPLEMENTAL WORK]

APPLICABLE STANDARD SHEETS

THE FOLLOWING NEW YORK STATE DEPARTMENT OF TRANSPORTATION REFERENCES SHALL APPLY TO THIS PROJECT:

NYSDOT STANDARD SHEETS:

- 402-01 HOT MIX ASPHALT OVERLAY SPLICE (PAVEMENT TERMINATION DETAIL)
- 502-01 METAL REINFORCEMENT FOR CONCRETE PAVEMENT
- 502-02 TYPICAL PLAN, CROSS SECTION AND JOINT LAYOUT
- 502-03 LONGITUDINAL JOINTS
- 607-04 CHAIN LINK FENCE WITH TOP RAIL
- 608-01 SIDEWALK CURB RAMP DETAILS
- 609-03 CONCRETE CURB, CURB AND GUTTER, AND HOT MIX ASPHALT CURB
- 619-01 TEMPORARY CONCRETE BARRIER
- 619-04 PORTABLE TEMPORARY WOODEN SIGN SUPPORT
- 619-10 WORK ZONE TRAFFIC CONTROL GENERAL NOTES
- 619-11 WORK ZONE TRAFFIC CONTROL LEGENDS AND NOTES
- 619-12 SIGN TABLE
- 645-01 STANDARD SIGN BLANK DETAILS
- 645-03 POSITIONING OF TRAFFIC SIGNS
- 645-14 POLE-MOUNTED SIGNS
- 670-01 LAMPPOST FOUNDATIONS
- 680-01 TRAFFIC SIGNAL POLE FOUNDATIONS
- 680-03 STANDARD CIRCULAR PULLBOXES, FRAMES AND COVERS
- 680-04 PULLBOX, CONDUIT AND GROUND ROD INSTALLATION DETAILS
- 680-05 BASE AND POLE MOUNTED CABINET INSTALLATION DETAILS
- 680-10 PEDESTRIAN SIGNALS AND FLASHING BEACON INSTALLATION DETAILS
- 685-01 PAVEMENT MARKING DETAILS

NYSDOT OVERHEAD SIGN STRUCTURES (BD SHEETS):

- BD-OS1 SPAN STRUCTURES
- BD-OS2 SPAN STRUCTURES SELECTION TABLE
- BD-OS3 SPAN STRUCTURES FOUNDATION
- BD-OS4 SPAN STRUCTURES POST DETAIL SHEET 1 OF 2
- BD-OS5 SPAN STRUCTURES POST DETAIL SHEET 2 OF 2
- BD-OS6 SPAN STRUCTURES TRUSS DETAILS SHEET 1 OF 2
- BD-OS7 SPAN STRUCTURES TRUSS DETAILS SHEET 1 OF 2
- BD-OS13 TYPICAL BASE AND CAP DETAILS
- BD-OS14 SIGN PANEL ATTACHMENT DETAILS

} REFERENCE DRAWINGS PROVIDED WITHIN CONTRACT DRAWING PACKAGE

GENERAL NOTES

1. THE OWNER OF THE WORK FOR THIS CONTRACT IS THE BUFFALO AND FORT ERIE PUBLIC BRIDGE AUTHORITY, HEREAFTER REFERRED TO AS THE AUTHORITY.
2. ALL WORK SHALL BE PERFORMED IN ACCORDANCE WITH THE CONTRACT DOCUMENTS AND SPECIFICATIONS UNLESS DIRECTED OTHERWISE BY THE ENGINEER.
3. WHEN PROPOSED WORK SHOWN IN THE PLANS DIFFERS FROM THE STANDARD SHEETS AND STANDARD SPECIFICATIONS, THE INFORMATION AS DETAILED ON THE PLANS AND THEN THE PROJECT SPECIFICATIONS SHALL GOVERN.
4. THE CONTRACTOR'S ATTENTION IS DIRECTED TO THE FACT THAT, DUE TO THE NATURE OF RECONSTRUCTION PROJECTS, THE EXACT EXTENT OF RECONSTRUCTION WORK CANNOT ALWAYS BE ACCURATELY DETERMINED PRIOR TO THE COMMENCEMENT OF WORK. THESE CONTRACT DOCUMENTS HAVE BEEN PREPARED BASED ON FIELD INSPECTION AND OTHER INFORMATION AVAILABLE AT THE TIME. ACTUAL FIELD CONDITIONS MAY REQUIRE MODIFICATIONS TO CONSTRUCTION DETAILS AND WORK QUANTITIES. THE CONTRACTOR SHALL PERFORM THE WORK IN ACCORDANCE WITH FIELD CONDITIONS.
5. THE CONTRACTOR SHALL CONFORM TO THE REQUIREMENTS OF ALL APPLICABLE GOVERNMENT BODIES, AS WELL AS THE REQUIREMENTS OF THE AUTHORITY. ALL REQUIREMENTS DEALING WITH INTERNATIONAL MOVEMENT OF GOODS AND PERSONNEL SHALL BE FOLLOWED.
6. THE CONTRACTOR'S ATTENTION IS DIRECTED TO THE FACT THAT NO SPOIL AREA FOR SURPLUS MATERIAL IS AVAILABLE FOR THIS CONTRACT WITHIN THE AUTHORITY'S RIGHT-OF-WAY. THEREFORE, ALL MATERIAL TO BE REMOVED FROM THE JOB SITE SHALL BE DISPOSED OF BY THE CONTRACTOR OUTSIDE THE AUTHORITY'S PROPERTY. ALL COSTS ASSOCIATED WITH THE SPOIL AREA AND REMOVAL OF SPOIL MATERIAL SHALL BE INCLUDED IN THE VARIOUS ITEMS OF THE CONTRACT. IT IS THE CONTRACTOR'S RESPONSIBILTY TO SUPPLY/SECURE A STORAGE AREA FOR THEIR MATERIALS AND EQUIPMENT.
7. WHENEVER ITEMS IN THE CONTRACT REQUIRE MATERIALS TO BE REMOVED AND DISPOSED OF, ALL RELATED COSTS INCLUDING THE COST OF SUPPLYING A DISPOSAL AREA AND TRANSPORTATION TO THAT AREA SHALL BE INCLUDED IN THE COST FOR THIS WORK.
8. SHOP DRAWINGS SHALL BE PREPARED AND SUBMITTED IN ACCORDANCE WITH THE NYSDOT REQUIREMENTS.
9. ALL SCAFFOLDING, PLATFORMS, RIGGING, FALSEWORK, SHORING, JACKING FRAMES, ATTACHMENT DESIGNS, CALCULATIONS AND LIFTING OPERATIONS SHALL BE REVIEWED, APPROVED, STAMPED AND SIGNED BY A LICENSED PROFESSIONAL ENGINEER IN THE STATE OF NEW YORK OR PROVINCE OF ONTARIO.
10. THE ENGINEER SHALL BE PERMITTED TO REVIEW ALL SCAFFOLDING, LADDERS, PLATFORMS, RIGGING, FALSEWORK, SHORING AND JACKING FRAMES AND ATTACHMENTS SHOP DRAWINGS PRIOR TO FABRICATION, INSTALLATION OR ERECTION. THE ENGINEER'S REVIEW OF THESE ELEMENTS IN NO WAY RELIEVES THE CONTRACTOR FROM RESPONSIBILITY OF REVIEWING THE DESIGN AND OBTAINING THE APPROVAL OF A LICENSED PROFESSIONAL ENGINEER.
11. THE CONTRACTOR SHALL COORDINATE AND SCHEDULE THE NEW WORK TO PREVENT CONFLICTS AND INTERFERENCES FROM OCCURRING. ANY ADDITIONAL WORK OR COSTS AS A RESULT OF THE CONTRACTOR NOT PERFORMING THE WORK IN A COORDINATED MANNER SHALL BE AT THE CONTRACTOR'S OWN EXPENSE WITH NO ADDITIONAL COST TO THE AUTHORITY.
12. IN THE EVENT THAT GROUND WATER IS ENCOUNTERED DURING THE COURSE OF CONSTRUCTION, THE COST OF DEWATERING, PUMPING, BAILING OR DRAINING NECESSARY TO KEEP THE EXCAVATION FREE OF WATER SHALL BE INCLUDED IN THE UNIT PRICE BID FOR THE STRUCTURAL EXCAVATION.
13. STORM DRAINAGE SHALL BE MAINTAINED THROUGHOUT THE PROJECT LIMITS INSIDE AND OUTSIDE THE WORK ZONES. IF NECESSARY, PROVIDE TEMPORARY MEANS INCLUDING PIPES, PUMPS AND EXTENSIONS TO CONNECT EXISTING CATCH BASINS TO EXISTING PIPING OR SUITABLE SPILL AREAS.
14. THE CONTRACTOR SHALL PROVIDE MEANS AND METHODS OF CONSTRUCTION FOR THE ENGINEER'S REVIEW AND APPROVAL PRIOR TO ANY CONSTRUCTION.
15. THE CONTRACTOR SHALL SUCCESSFULLY PROVE THAT 100% OF THE GENERATED SLURRY FROM SAWCUTTING CAN BE CONTAINED, COLLECTED, AND PROPERLY DISPOSED OF. IF AT ANY TIME THE CONTRACTOR FAILS TO CONTAIN THE SLURRY, AS DETERMINED BY THE ENGINEER, THE CONTRACTOR WILL BE RESPONSIBLE FOR THE PROPER CLEAN-UP AND AN ALTERNATIVE METHOD MUST BE USED AT NO ADDITONAL COST TO THE AUTHORITY.
16. WORK IS EXPECTED TO PROCEED CONTINUOUSLY, INCLUDING THROUGH INCLEMENT WEATHER. ANY ADDITIONAL COSTS DUE TO THE PERFORMANCE OF THE WORK SHALL BE INCLUDED IN THE PRICE BID. NO ADDITIONAL PAYMENT WILL BE MADE FOR MEASURES REQUIRED FOR THE PROSECUTION OF THE WORK REGARDLESS OF WEATHER.
17. EXISTING FACILITIES FOR EMPLOYEES OF THE AUTHORITY WILL NOT BE AVAILABLE TO THE CONTRACTOR.

PROJECT SPECIFICATIONS

1. DESIGN SPECIFICATIONS: NEW YORK STATE DEPARTMENT OF TRANSPORTATION STANDARD DESIGN SPECIFICATIONS FOR OVERHEAD SIGN STRUCTURES.
2. CONSTRUCTION AND MATERIALS SPECIFICATIONS: STANDARD SPECIFICATIONS, CONSTRUCTION AND MATERIALS, NEW YORK STATE DEPARTMENT OF TRANSPORTATION, OFFICE OF ENGINEERING, DATED JAN 1, 2019 WITH CURRENT ADDITIONS AND MODIFICATIONS.

CONCRETE

1. CONCRETE MEETING THE REQUIREMENTS OF NYSDOT STANDARD SPECIFICATIONS SECTION 501 - PORTLAND CEMENT CONRETE - GENERAL SHALL BE USED FOR ALL CONCRETE APPLICATIONS.
2. THE COMPRESSIVE STRENGTH (f'c) OF CONCRETE AT 28 DAYS SHALL BE A MINIMUM OF 4,000 PSI.
3. ALL STEEL REINFORCEMENT SHALL MEET THE REQUIREMENTS OF ASTM A615 (GRADE 60) AND SHALL BE EPOXY COATED.

FIELD INSPECTION PRIOR TO BIDDING

1. IT SHALL BE THE CONTRACTOR'S RESPONSIBILITY TO VERIFY EXISTING FIELD CONDITIONS BEFORE BIDDING ON THE PROJECT.

DIMENSIONS

1. THE CONTRACTOR SHALL EXAMINE AND VERIFY, IN THE FIELD, ALL CONDITIONS AND DIMENSIONS. DIMENSIONS OF THE EXISTING FEATURES SHOWN ON THESE PLANS ARE FOR GENERAL REFERENCE ONLY. THEY HAVE BEEN TAKEN FROM THE ORIGINAL CONSTRUCTION OR SUBSEQUENT REHABILITATION DRAWINGS AND ARE NOT GUARANTEED. THE CONTRACTOR SHALL NOT SCALE THESE CONTRACT DOCUMENTS FOR DIMENSIONS OR DISTANCES. THE CONTRACTOR SHALL TAKE ALL SUCH FIELD MEASUREMENTS TO ASSURE PROPER FIT OF THE FINISHED WORK, AND THE CONTRACTOR SHALL ASSUME FULL RESPONSIBILITY FOR THEIR ACCURACY. IF FIELD CONDITIONS AND DIMENSIONS DIFFER FROM THOSE SHOWN ON THE PLANS, THE CONTRACTOR SHALL USE THE FIELD CONDITIONS AND DIMENSIONS AND MAKE THE APPROPRIATE CHANGES TO THOSE SHOWN ON THE PLANS, SUBJECT TO THE APPROVAL OF THE ENGINEER. WHEN SHOP DRAWINGS BASED ON FIELD MEASUREMENTS ARE SUBMITTED FOR APPROVAL, THE FIELD MEASUREMENTS MADE SHALL BE INDICATED ON THE SHOP DRAWINGS SUBMITTED FOR REFERENCE OF THE REVIEWER. DO NOT SCALE THE PLANS FOR CONSTRUCTION DIMENSIONS.

SPECIAL NOTES

1. THE CONTRACTOR'S ATTENTION IS DIRECTED TO THE FACT THAT THIS STRUCTURE HAS MANY LIMITATIONS RELATED TO LOAD CAPACITY:
   - A. THE CONTRACTOR SHALL SUBMIT CALCULATIONS SIGNED BY A LICENSED PROFESSIONAL ENGINEER FOR ANY CONSTRUCTION LOADS THEY INTEND TO PLACE ON THE FLOORBEAM BRACKETS (WITHIN THE APPROACHES AND TRUSS SPAN) AND FLOORBEAM CANTILEVERS (WITHIN THE ARCH SPANS)
   - B. WHEN CONNECTING REINFORCEMENT STEEL AND CONNECTION PLATES TO THE ARCH SPAN FLOORBEAMS AND/OR SPANDREL COLUMNS, THERE SHALL BE NO UNNECESSARY LOADING ON THE MEMBERS.
   - C. ABSOLUTELY NO MATERIALS, EQUIPMENT OR ACCUMULATED SNOW SHALL REST WITHIN THE BIKEWAY OR SERVICE PATH AREAS DURING STAGE 5.
   - D. TEMPORARY CONCRETE BARRIERS, TIMBER CURBS AND BARRELS SHALL BE PLACED AS SHOWN WITHIN THESE PLANS. THE CONTRACTOR SHALL NOT BE PERMITTED TO SHIFT TRAFFIC ANY CLOSER TO EXTERIOR RAILS THAN NOTED.
2. NO TEMPORARY TRAFFIC RESTRICTIONS WILL BE ALLOWED FROM THREE HOURS PRIOR TO THREE HOURS AFTER ANY NFL BUFFALO BILLS (ORCHARD PARK, NY) OR NHL BUFFALO SABRES (BUFFALO, NY) HOME GAMES, AND NFL BUFFALO BILLS GAMES PLAYED AT THE ROGERS CENTRE IN TORONTO, ONTARIO. THE AUTHORITY SHALL HAVE THE RIGHT TO RESTRICT TRAFFIC INTERRUPTIONS BEFORE, DURING AND AFTER OTHER EVENTS HELD AT RALPH WILSON STADIUM (ORCHARD PARK, NY) AND THE FIRST NIAGARA CENTER (BUFFALO, NY).
3. THE CONTRACTOR SHALL CORRECT DEFECTS AND DEFICIENCIES FOR ALL ASPECTS OF WORK AT NO COST TO THE AUTHORITY FOR A PERIOD OF 12 MONTHS AFTER THE COMPLETION OF FIELD WORK.

BUFFALO AND FORT ERIE
PUBLIC BRIDGE AUTHORITY

PORT HARDENING PROGRAM 2020

GPI Engineering Design Planning Construction Management
716-633-4844 GPINET.COM
Greenman-Pedersen, Inc.
403 Main Street, Suite 330
Buffalo, NY 14203

INDEX OF DRAWINGS AND GENERAL NOTES (1 OF 2)

DESIGNED: T.P.C.	DRAWN: T.P.C.	CHECKED: T.L.
SCALE: N.T.S.	DRAWING G-2	SHEET NO. 2 OF 23
DATE: JUNE 2020		

COORDINATION

1. THE CONTRACTOR'S ATTENTION IS DIRECTED TO THE FACT THAT WORK FOR THIS CONTRACT MAY BE PERFORMED SIMULTANEOUSLY WITH WORK PERFORMED BY OTHER CONTRACTORS IN THE AREA. THE CONTRACTOR WILL BE REQUIRED TO COORDINATE THEIR WORK WITH OTHER WORK, TO COOPERATE FULLY WITH OTHER CONTRACTORS OR OTHER AGENCIES PERFORMING WORK ON THE BRIDGE OR THE SURROUNDING AREA, AND TO SCHEDULE HIS OR HER OPERATIONS SO AS TO CAUSE MINIMUM DISRUPTION TO TRAFFIC AND TO THE COMPLETION OF WORK.

MAINTENANCE AND PROTECTION OF TRAFFIC

1. PROTECTION OF THE PUBLIC: THE CONTRACTOR SHALL MAINTAIN AND PROTECT ALL TRAFFIC IN ACCORDANCE WITH THE PROVISIONS OF THE PROJECT SPECIFICATIONS, AS DIRECTED BY THE ENGINEER AND AS REQUIRED BY THE AUTHORITY.

2. THE CONTRACTOR SHALL COORDINATE THEIR MAINTENANCE AND PROTECTION OF TRAFFIC ACTIVITIES AND ACCESS NEEDS WITH THE AUTHORITY.

3. ALL TRAFFIC CONTROL DEVICES AND SCHEMES USED FOR WORK ZONE TRAFFIC CONTROL SHALL CONFORM TO THE APPLICABLE DRAWINGS AND SPECIFICATIONS AS SET FORTH IN THE NATIONAL MANUAL OF UNIFORM TRAFFIC DEVICES, 2009 EDITION, INCLUDING NEW YORK STATE SUPPLEMENT (17 NYCRR CHAPTER V), 2010 EDITION INCLUDING ALL CURRENT ADDITIONS, REVISIONS AND MODIFICATIONS.

4. THE WORK ZONE TRAFFIC CONTROL PLANS SHOWN ARE CONSIDERED TO BE THE MINIMUM REQUIREMENTS. ADDITIONAL SIGNS AND/OR TRAFFIC CONTROL DEVICES MAY BE REQUIRED AS DETERMINED BY THE ENGINEER AND MUST BE PROVIDED WHERE SPECIAL COMPLEXITIES AND HAZARDS PREVAIL. COST SHALL BE INCLUDED IN BID PRICE.

5. THE CONTRACTOR SHALL BE RESPONSIBLE FOR ALL MAINTENANCE AND ENSURING ALL SIGNS, CONES, LIGHTING, BARRICADES, ETC. ARE IN PLACE AND IN GOOD CONDITION. THE SOLE JUDGE OF THE EFFECTIVENESS OF THE CONTRACTOR'S EFFORTS TOWARD PROTECTION OF TRAFFIC SHALL BE THE ENGINEER. IF THE ENGINEER NOTIFIES THE CONTRACTOR OF ANY HAZARDOUS CONSTRUCTION PRACTICE, ALL OPERATIONS IN THAT AREA SHALL BE DISCONTINUED AND IMMEDIATE REMEDIAL ACTION SHALL BE TAKEN TO CORRECT THE SITUATION TO THE SATISFACTION OF THE ENGINEER AT NO ADDITIONAL COST TO THE AUTHORITY.

6. THE CONTRACTOR SHALL PROVIDE A FLAGGER AND APPROPRIATE SIGNING WHENEVER OPERATIONS INTERFERE WITH TRAFFIC. FLAGGERS SHALL DIRECT TRAFFIC AT ALL TIMES AND SHALL BE POSITION APPROPRIATELY IN ADVANCE OF THE WORK.

7. THE TEMPORARY CLOSING OF A TRAVEL LANE (BEYOND DEPICTED WITHIN CONTRACT DOCUMENTS) WILL ONLY BE PERMITTED WHEN DEEMED NECESSARY BY THE CONTRACTOR'S ACTIVITIES AS APPROVED BY THE ENGINEER. NO CLAIM WILL BE ALLOWED FOR A LANE CLOSURE REFUSAL OR TIME LIMITATION.

8. THE CONTRACTOR SHALL EMPLOY A TRAFFIC CONTROL SUPERVISOR AS SPECIFIED IN THE STANDARD SPECIFICATIONS. THE TRAFFIC CONTROL SUPERVISOR SHALL REVIEW THE EXISTING WORK ZONE TRAFFIC CONTROL THROUGHOUT THE WORK OPERATION, ENSURING ALL SIGNS AND DEVICES ARE IN PLACE AS PER CONTRACT DOCUMENTS.

9. THE CONTRACTOR SHALL MAINTAIN POSITIVE STORMWATER DRAINAGE THROUGHOUT THE DURATION OF THE PROJECT.

10. THE CONTRACTOR SHALL BE AWARE THAT THERE MAY BE OTHER ACTIVE CONSTRUCTION CONTRACTS OR MAINTENANCE OPERATIONS WITHIN THE WORK AREA. THE ENGINEER AND THE CONTRACTOR SHALL COORDINATE OPERATIONS WITH OTHERS SO THAT NO CONFLICT IN WORK SCHEDULING OR LOCATION OCCURS. THE CONTRACTOR SHALL HAVE NO RIGHT TO RESTRICT ACCESS TO THE ABOVE MENTIONED.

11. THE CONTRACTOR SHALL TAKE NOTE THAT THE AREA ADJACENT TO THE WORK AREA IS USED FOR ACTIVE TRAFFIC. THE CONTRACTOR SHALL PLAN OPERATIONS SO THAT THE TRAFFIC IS NOT AFFECTED.

12. ALL OPENINGS IN THE ROADWAY TO BE PLATED SHALL UTILIZE A MINIMUM 1 1/4 INCH THICK STEEL PLATE. ALSO, THE EDGE OF THE PLATE FACING ONCOMING TRAFFIC SHALL BE BEVELED. THE PLATE SHALL BE SECURELY FASTENED DOWN TO THE SATISFACTION OF THE ENGINEER AND SHALL BE STRUCTURALLY CAPABLE OF CARRYING ALL IMPOSED LOADS.

13. THE CONTRACTOR IS RESPONSIBLE FOR MAINTAINING PEDESTRIAN AND BICYCLE TRAFFIC THROUGH AND AROUND ALL WORK ZONES WITHIN AUTHORITY AND ADJACENT PROPERTIES/ROADWAYS.

14. THE CONTRACTOR WILL BE REQUIRED TO PROVIDE PAVEMENT MARKINGS IN ACCORDANCE WITH THE NATIONAL MUTCD (2009), AND THE NEW YORK STATE SUPPLEMENT, BEFORE OPENING TO TRAFFIC.

15. WHEN THE CONTRACTOR PERFORMS WORK AT NIGHT, THE WORK SITE SHALL BE ILLUMINATED TO THE SATISFACTION OF THE ENGINEER. THE CONTRACTOR IS TO SUPPLY A LIGHTING PLAN TO THE ENGINEER FOR REVIEW AND APPROVAL A MINIMUM OF 7 DAYS PRIOR TO ITS PROPOSED IMPLEMENTATION.

16. FIXED HAZARDS CURRENTLY PROTECTED SHALL REMAIN PROTECTED AT ALL TIMES. AT LOCATIONS WHERE EXISTING GUIDE RAIL OR CONCRETE BARRIER IS TO BE REMOVED OR RELOCATED, THE WORK SHALL BE PERFORMED IN A TIMELY MANNER TO MINIMIZE THE TIME THE AREA IS WITHOUT GUIDE RAIL OR CONCRETE BARRIER (PERMANENT OR TEMPORARY). THE WORK SHALL BE FURTHER RESTRICTED AS FOLLOWS:

    A. DRUMS SHALL BE USED FOR ALL TAPERS AND TRANSITIONS, AND SPACED AT 20 FEET INTERVALS UNLESS OTHERWISE DIRECTED OR APPROVED BY THE ENGINEER. SHORT TERM TEMPORARY TRAFFIC CONTROLS SHALL BE IN ACCORDANCE WITH NYSDOT STANDARD SECTION 619.
    B. THE CONTRACTOR SHALL SCHEDULE ITS WORK SO THAT NO AREA IS LEFT WITHOUT GUIDE RAIL OR CONCRETE BARRIER (PERMANENT OR TEMPORARY) AT THE END OF THE WORK SHIFT.

17. THE CONTRACTOR WILL BE RESPONSIBLE FOR MAINTENANCE, REPAIR AND REPLACEMENT OF ANY AND ALL REMOVABLE PAVEMENT MARKINGS THAT BECOME DISLODGED, DAMAGED OR NO LONGER FUNCTION AS INTENDED TO THE SATISFACTION OF THE ENGINEER, AND AT NO COST TO THE AUTHORITY.

18. ALL VEHICLES, EQUIPMENT, CONSTRUCTION WORKERS, AND THEIR ACTIVITIES ARE RESTRICTED AT ALL TIMES TO THE WORK AREA AS SHOWN IN THE PLANS. THE CONTRACTOR SHALL, AT NO TIME, ALLOW THEIR EMPLOYEE'S VEHICLES TO BE PARKED ON THE BRIDGE, TOLL PLAZAS, OR ACTIVE TRAFFIC AREAS UNDER OR AROUND THE BRIDGE.

19. WHEN REOPENING DRIVING LANES TO TRAFFIC, THE CONTRACTOR SHALL START BY REMOVING THE TRAFFIC CONTROL DEVICES AT THE FAR END OF THE LANE CLOSURE AND WORK TOWARDS THE SIGNS AT THE BEGINNING OF THE LANE CLOSURE. THE SIGNS ARE NOT TO BE TAKEN DOWN UNTIL ALL TRAFFIC CONTROL DEVICES HAVE BEEN REMOVED.

20. ESCORT VEHICLES EQUIPPED WITH AN APPROVED ROTATING AMBER WARNING LIGHT SHALL BE REQUIRED WHEN TRANSPORTING SLOW MOVING CONSTRUCTION EQUIPMENT ALONG ANY PORTION OF THE BRIDGE OR APPPROACHES THAT IS OPEN TO TRAFFIC.

21. ALL VEHICLES THAT WILL MOVE INTO AND OUT OF TRAFFIC AT WORK AREAS SHALL BE EQUIPPED WITH AN APPROVED ROTATING AMBER WARNING LIGHT THAT SHALL BE MOUNTED SO AS TO BE EASILY SEEN BY APPROACHING TRAFFIC.

SIGNAGE

1. EXISTING SIGNS DESIGNATED FOR REMOVAL ARE NOT TO BE REMOVED BEFORE BEING REPLACED BY NEW SIGNS AT THE LOCATIONS CALLED FOR IN THE PLANS. IF EXISTING SIGNS ARE REMOVED BEFORE THE NEW ONES ARE INSTALLED, TEMPORARY SIGNS SHALL BE PROVIDED AT THESE LOCATIONS.

2. ALL CONFLICTING SIGNS, OR SIGNS NOT APPLICABLE AFTER WORK HOURS SHALL BE COVERED. ALL SIGN COVERS SHALL BE SECURED AND ABLE TO WITHSTAND WINDS OR ADVERSE WEATHER CONDITIONS.

3. THE SIGN LOCATIONS SHOWN ON THE PLANS ARE APPROXIMATE. THE EXACT LOCATIONS SHALL BE APPROVED BY THE ENGINEER IN THE FIELD.

UTILITIES

1. LOCATION OF UTILITIES, PUBLIC AND/OR PRIVATE, INDICATED AS EXISTING AND/OR TO BE CONSTRUCTED AS SHOWN ON THE PLANS ARE APPROXIMATE ONLY. THEIR EXACT LOCATION SHALL BE DETERMINED IN THE FIELD.

2. THE CONTRACTOR'S ATTENTION IS DIRECTED TO THE FACT THAT UTILITIES MAY BE PRESENT THROUGHOUT THE PROJECT SITE. THEIR EXISTENCE AND LOCATIONS SHALL BE FIELD VERIFIED. IF UTILITIES ARE PRESENT AND ARE ENCOUNTERED DURING CONSTRUCTION OPERATIONS, CARE SHALL BE TAKEN NOT TO DAMAGE THEM IN ANY WAY. ANY DAMAGE SHALL BE REPAIRED TO THE SATISFACTION OF THE ENGINEER, AT NO COST TO THE AUTHORITY.

3. THE CONTRACTOR SHALL BE RESPONSIBLE FOR THE MAINTENANCE, SUPPORT AND PROTECTION OF ALL EXISTING UTILITIES AFFECTED BY THEIR WORK FOR THE DURATION OF THE CONTRACT. COST TO BE INCLUDED IN THE VARIOUS CONTRACT ITEMS.

4. THE CONTRACTOR IS ADVISED THAT THE PEACE BRIDGE CARRIES MAJOR COMMUNICATION UTILITIES ACROSS THE BRIDGE AND WITHIN ITS PROPERTIES. THE CONTRACTOR SHALL TAKE CARE NOT TO DISTURB THESE UTILITIES. IT IS THE CONTRACTOR'S RESPONSIBILITY TO CONTACT THE APPROPRIATE UTILITY COMPANY PRIOR TO PERFORMING ANY WORK WHICH, IN THE CONTRACTOR'S OPINION, OR ENGINEER'S OPINION WILL JEOPARDIZE THE UTILITIES. THE CONTRACTOR WILL BE SOLELY RESPONSIBLE FOR REPAIR AND REPLACEMENT NECESSARY AS A RESULT OF ANY DAMAGE OCCURRING TO THESE UTILITIES.

5. ALL ELECTRICAL INSTALLATION SHALL CONFORM TO ALL PROVISIONS OF THE NATIONAL ELECTRICAL CODE (NEC), THE NATIONAL ELECTRICAL SAFETY CODE (NESC), LOCAL CODE, AND OSHA; WHERE CODES CONFLICT, THE MORE STRINGENT REQUIREMENTS SHALL APPLY.

6. LIGHTING WORK SHALL BE COORDINATED SUCH THAT AT NO TIME SHALL FULL LIGHTING OUTAGES WITHIN OR OUTSIDE OF THE PROJECT SITE BE EXPERIENCED. ORIGINAL SYSTEMS MUST BE MAINTAINED OR SUPPLEMENTED UNTIL SUCH TIME THAT THEY ARE REPLACED OR NO LONGER REQUIRED.

BUFFALO AND FORT ERIE
PUBLIC BRIDGE AUTHORITY

PORT HARDENING PROGRAM 2020

GPI Engineering Design Planning Construction Management
716-633-4844 GPINET.COM
Greenman-Pedersen, Inc.
403 Main Street, Suite 330
Buffalo, NY 14203

INDEX OF DRAWINGS AND GENERAL NOTES (2 OF 2)

DESIGNED: T.P.C.	DRAWN: T.P.C.	CHECKED: T.L.
SCALE: N.T.S.	DRAWING G-3	SHEET NO. 3 OF 23
DATE: JUNE 2020		

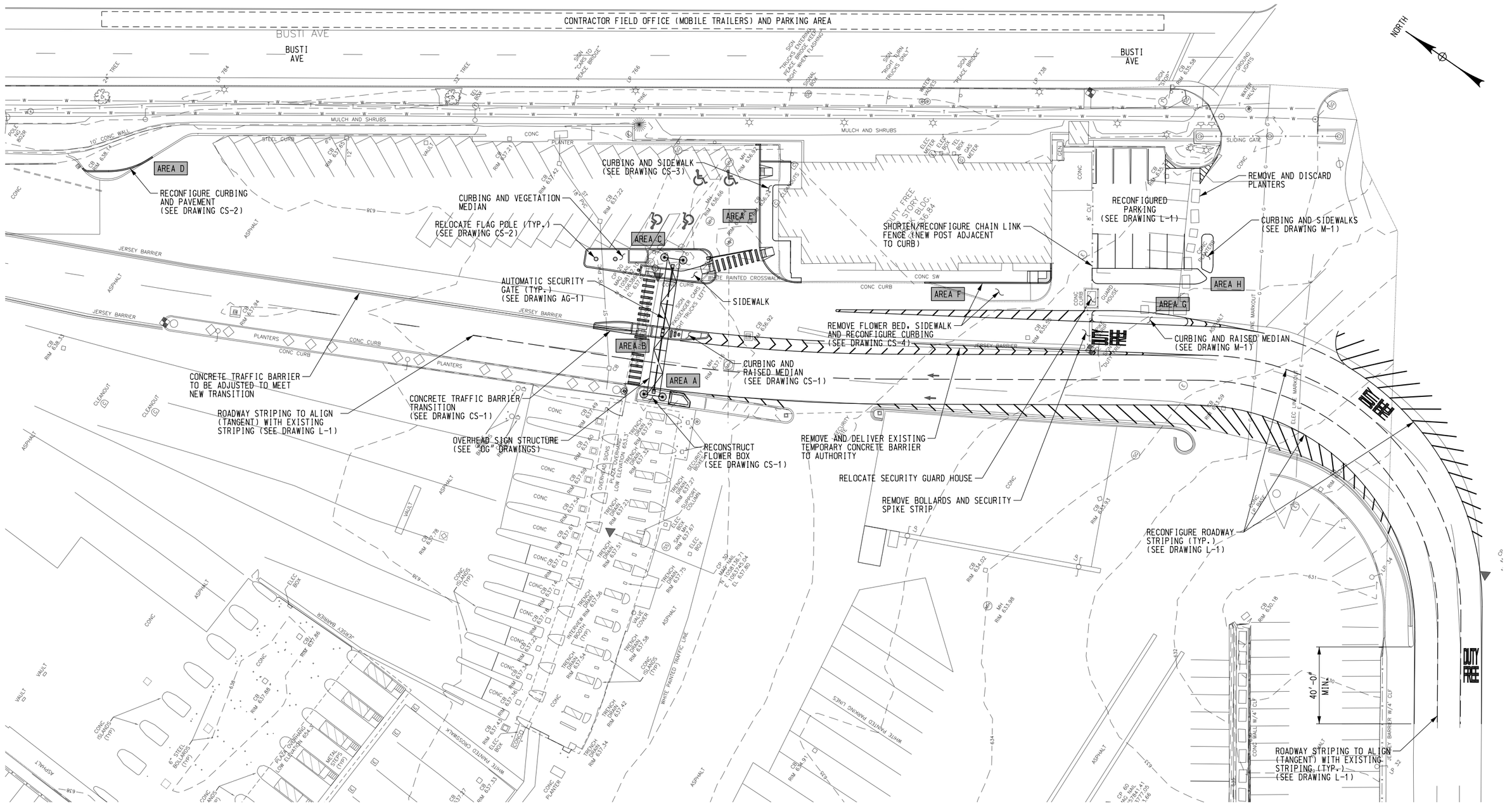

GENERAL PLAN

NOTES:

1. SCOPE OF WORK SHALL EXTEND BEYOND THIS DRAWING AND SHALL BE INCLUSIVE OF PROJECT DRAWING AND SPECIFICATION PACKAGES.
2. THE CONTRACTOR'S ATTENTION IS DIRECTED TO THE FACT THAT THERE IS NO LAYDOWN AREA OR SPACE AVAILABLE FOR FIELD OFFICES AND EMPLOYEE PARKING FOR THIS CONTRACT WITHIN THE AUTHORITY'S RIGHT-OF-WAY. THE AUTHORITY WILL ACQUIRE PERMISSION FROM THE CITY OF BUFFALO TO USE THE PARKING AREA ALONG BUSTI AVENUE (NOTED WITHIN THE PLAN DRAWING) FOR MOBILE TRAILERS TO BE USED AS CONTRACTOR'S FIELD OFFICES. THE DEDICATED AREA IS PUBLIC PROPERTY AND THEREFORE ACCESSIBLE TO THE GENERAL PUBLIC. THE CONTRACTOR SHALL SECURE THEIR PROPERTY TO PREVENT VANDALISM, MALICIOUS MISCHIEF AND THEFT.
3. THE CONTRACTOR SHALL COORIDNATE WITH THE ENGINEER AND AUTHORITY A SUITABLE LOCATION FOR RECEIPT, STORAGE AND ASSEMBLY OF PROJECT EQUIPMENT AND MATERIALS TO BE INSTALLED OR CONSTRUCTED.

BUFFALO AND FORT ERIE PUBLIC BRIDGE AUTHORITY

PORT HARDENING PROGRAM 2020

GPI Engineering Design Planning Construction Management
716-633-4844 GPINET.COM
Greenman-Pedersen, Inc.
403 Main Street, Suite 330
Buffalo, NY 14203

GENERAL PLAN

DESIGNED: T.P.C.	DRAWN: T.P.C.	CHECKED: T.L.
SCALE: 1"=50'-0"	DRAWING GP-1	SHEET NO. 4 OF 23
DATE: JUNE 2020		

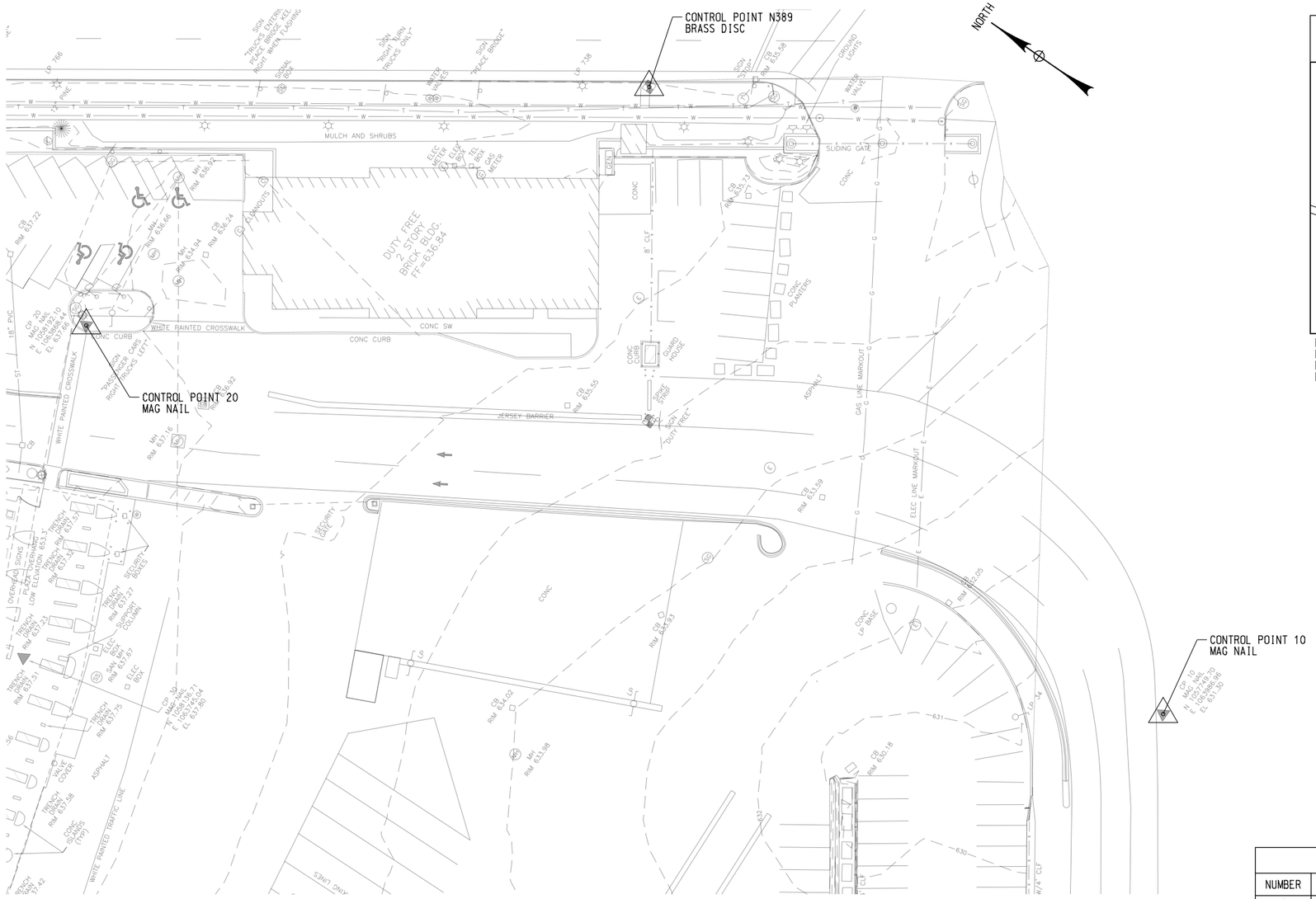

KEY PLAN

CONTROL POINT N389

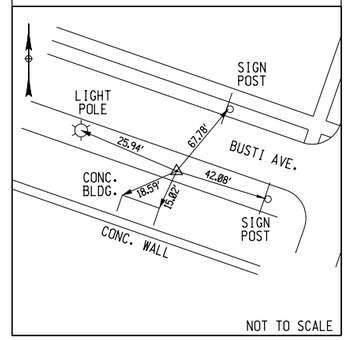

FEATURE: BRASS DISC
N: 1,058,061.7413
E: 1,064,075.2086
ELEV: 636.66

CONTROL POINT 10

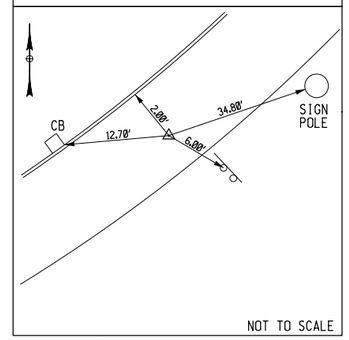

FEATURE: MAG NAIL
N: 1,057,749.70
E: 1,063,986.96
ELEV: 631.30

CONTROL POINT 20

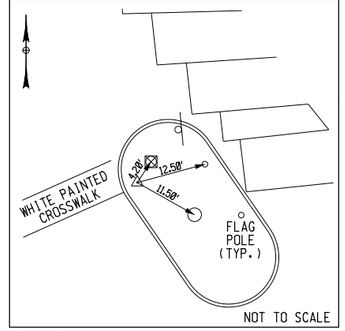

FEATURE: MAG NAIL
N: 1,058,192.10
E: 1,063,868.44
ELEV: 637.66

BENCHMARK				
NUMBER	NORTHING	EASTING	ELEVATION	DESCRIPTION
1	1,057,985	1,063,965	635.89	CHISELED SQUARE AT WEST SIDE CONCRETE LIGHT POLE BASE
2	1,058,389	1,063,702	638.69	CHISELED SQUARE AT NORTH END OF CONCRETE CURB
3	1,057,967	1,063,488	638.00	CHISELED "X" NORTHEAST ANCHOR BOLT IN LIGHT POLE #2
4	1,057,825	1,063,714	634.28	CHISELED SQUARE AT NORTHEAST CORNER OF CONCRETE PAD
5	1,058,484	1,063,434	637.01	CHISELED "X" NORTHEAST CORNER OF ELECTRICAL MANHOLE
6	1,058,062	1,064,075	636.66	BRASS DISK USC&GS N389 1967

NOTES:

1. ALL HORIZONTAL COORDINATES ARE GRID. THE FINAL RESULTS OF THE GPS SURVEY ARE CALCULATED USING NYSPCS NAD 83 (2011) WEST ZONE.
2. ALL ELEVATIONS REFERENCE THE NORTH AMERICAN VERTICAL DATUM (NAVD 88)
3. COMBINED SCALE FACTOR 0.99992729.
4. CONTRACTOR SHALL VERIFY THE ACCURACY OF THE CONTROL POINTS PRIOR TO CONSTRUCTION.

BUFFALO AND FORT ERIE
PUBLIC BRIDGE AUTHORITY

PORT HARDENING PROGRAM 2020

GPI Engineering Design Planning Construction Management
716-633-4844 GPINET.COM
Greenman-Pedersen, Inc.
403 Main Street, Suite 330
Buffalo, NY 14203

SURVEY CONTROL

DESIGNED: T.P.C.	DRAWN: T.P.C.	CHECKED: T.L.
SCALE: N.T.S.	DRAWING SV-1	SHEET NO. 5 OF 23
DATE: JUNE 2020		

GENERAL NOTES:

1. THE CONTRACTOR MUST SUBMIT TO THE AUTHORITY, IN WRITING, PROPOSED REVISIONS TO THE TRAFFIC CONTROL PLANS FOR REVIEW AND APPROVAL BY THE ENGINEER.
2. THE CONTRACTOR SHALL PROVIDE THE AUTHORITY, IN WRITING, WITH THE NAMES, ADDRESSES, AND TELEPHONE NUMBERS OF STAFF WHO ARE AUTHORIZED TO SECURE LABOR, MATERIALS, AND EQUIPMENT FOR EMERGENCY REPAIRS OUTSIDE NORMAL WORKING HOURS.
3. THE CONTRACTOR IS LIMITED TO THE SPACE SHOWN WITHIN WORK ZONES EXCEPT FOR THE INSTALLATION OF PAVEMENT MARKINGS.
4. THE CONTRACTOR SHALL RESTORE DAMAGED AREAS IN THE STAGING AREAS AND OUTSIDE LIMITS OF WORK AT NO ADDITIONAL COST TO THE AUTHORITY.
5. THE LOCATION OF THE SIGNS SHOWN WITHIN THE TRAFFIC CONTROL PLANS MAY BE ADJUSTED BASED ON SIGHT DISTANCE AND OTHER CONSIDERATIONS.
6. ANY EXISTING SIGNS, INCLUDING OVERHEAD SIGNS, WHICH CONFLICT WITH THE TEMPORARY TRAFFIC CONTROL SIGN LAYOUT SHALL BE COVERED, REMOVED, STORED AND RESET. ALL APPROPRIATE EXISTING SIGNS SHALL BE RESTORED TO THEIR ORIGINAL CONDITION AND/OR LOCATION UNLESS REPLACED IN THIS CONTRACT.
7. CONTRACTOR SHALL COORDINATE TEMPORARY SHUT DOWN OF ROADWAY FOR INSTALLATION OF OVERHEAD SIGN STRUCTURE WITH THE AUTHORITY. FULL LONG TERM LANE CLOSURES ARE LIMITED TO THE HOURS OF 2:00 AM TO 5:00 AM.
8. WHERE POSSIBLE, ALL CHANNELIZING AND GUIDING DEVICES ARE TO BE PLACED SO AS TO PROVIDE A MINIMUM 2'-0" LATERAL CLEARANCE TO THE TRAVELED WAY.
9. THE AUTHORITY MAY REQUIRE THAT ALL LANES BE REOPENED AT ANY TIME IF THE ROUTE IS NEEDED FOR EMERGENCY PURPOSES. THIS COULD INCLUDE INCIDENTS AT LOCATIONS OUTSIDE THE CONTRACT LIMITS.

WORK TO BE COMPLETED IN STAGE 1:

WORK ZONE TRAFFIC CONTROL SETUP

1. REMOVE AND DELIVER EXISTING TEMPORARY CONCRETE BARRIER TO AUTHORITY
2. RECONFIGURE SIGN PANELS ON EXISTING SIGN STRUCTURE
3. INSTALL TEMPORARY BARRIER AND CHANNELIZING DEVICES AS SHOWN
4. REMOVE CONFLICTING PAVEMENT STRIPING/ARROWS
5. PLACE WHITE TEMPORARY PAVEMENT STRIPING
6. INSTALL TEMPORARY SIGNS
7. ESTABLISH TEMPORARY DUTY FREE EMPLOYEE PARKING AREA
8. RELOCATE DUTY FREE GARBAGE DUMPSTERS (LOCATION T.B.D.)
9. MODIFY CHAIN LINK FENCE FOR DUTY FREE EMPLOYEE PASSAGEWAY

AREA A

1. REMOVE AND DELIVER VEGETATION WITHIN THE PLANTER BOX TO AUTHORITY
2. DEMOLISH AND RECONSTRUCT (IN-KIND) PORTION OF PLANTER BOX
3. REMOVE EXISTING SIGNS AND FOUNDATIONS
4. SAWCUT ASPHALT PAVEMENT, TRENCH/BURY CONDUITS (WITHIN WORK ZONE)
5. INSTALL (2) OVERHEAD SIGN STRUCTURE DRILLED SHAFT FOUNDATIONS (WITH EMBEDDED CONDUITS)
6. INSTALL (1) SECURITY GATE FOUNDATION (WITH EMBEDDED CONDUITS)
7. CONSTRUCT PEDESTRIAN PUSHBUTTON STATION (INCLUDING FOUNDATION AND CONDUITS)
8. REPAIR/INSTALL ASPHALT PAVEMENT

AREA E

1. WORK SHALL BE STAGED TO ALLOW FOR SAFE PASSAGE OF DUTY FREE CUSTOMERS (RETAIL AND EXTERIOR BATHROOMS) AT ALL TIMES - PASSAGEWAYS SHALL BE HANDICAP ACCESSIBLE (CURB RAMPS)
2. SAWCUT ASPHALT PAVEMENT AND REMOVE
3. SAWCUT CURB/SIDEWALK AND REMOVE PANELS
4. INSTALL NEW CURBS, SIDEWALK, CURB RAMPS AND DETECTABLE WARNING SURFACES
5. REPAIR/INSTALL ASPHALT PAVEMENT

AREA F

1. WORK SHALL BE STAGED TO ALLOW FOR SAFE PASSAGE OF DUTY FREE CUSTOMERS (RETAIL AND EXTERIOR BATHROOMS) AND EMPLOYEES (SERVICE ENTRANCE) AT ALL TIMES - PASSAGEWAYS SHALL BE HANDICAP ACCESSIBLE (CURB RAMPS)
2. SAWCUT ASPHALT PAVEMENT AND REMOVE
3. SAWCUT CURB/SIDEWALK AND REMOVE PANELS
4. INSTALL NEW CURBS, SIDEWALK, CURB RAMPS AND DETECTABLE WARNING SURFACES
5. REPAIR/INSTALL ASPHALT PAVEMENT

AREAS G AND H

1. REMOVE AND DISCARD (11) FLOWER PLANTERS
2. REMOVE AND STORE/RELOCATE SECURITY GUARD HOUSE UNTIL SUBSEQUENT STAGE AT A LOCATION T.B.D. BY AUTHORITY (GUARD HOUSE MAY CONTINUE TO BE OCCUPIED DURING CONSTRUCTION)
3. REMOVE SECURITY GUARD CONCRETE PAD AND (5) BOLLARDS
4. REMOVE (8) BOLLARDS, SIGNS, EQUIPMENT AND (2) CIRCULAR FOUNDATIONS AT DUTY FREE ENTRANCE (DELIVER SIGNS AND EQUIPMENT TO AUTHORITY)
5. REMOVE SPIKE STRIP ASSEMBLY
6. SHORTEN/RECONFIGURE CHAIN LINK FENCE (INSTALL NEW END POST)
7. SAWCUT ASPHALT PAVEMENT AND REMOVE
8. INSTALL NEW MEDIAN CURBS
9. INSTALL NEW MEDIAN SIDEWALKS
10. REPAIR/INSTALL ASPHALT PAVEMENT

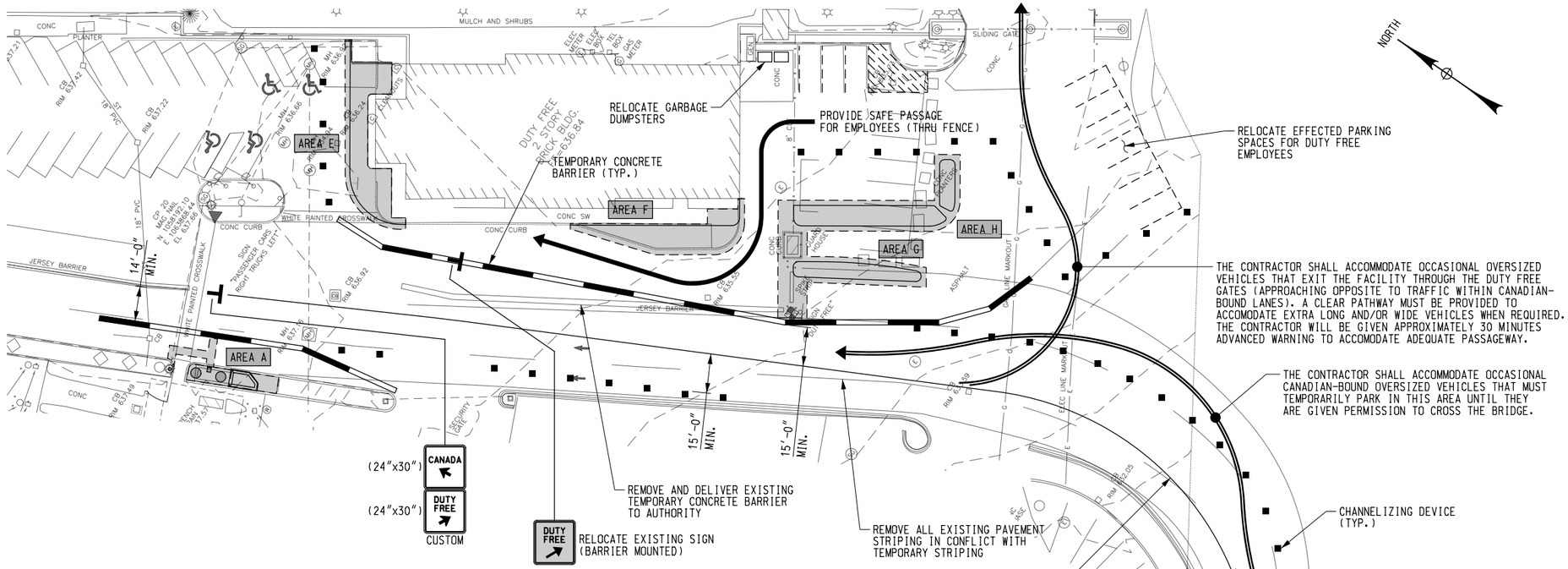

TRAFFIC CONTROL PLAN
STAGE 1

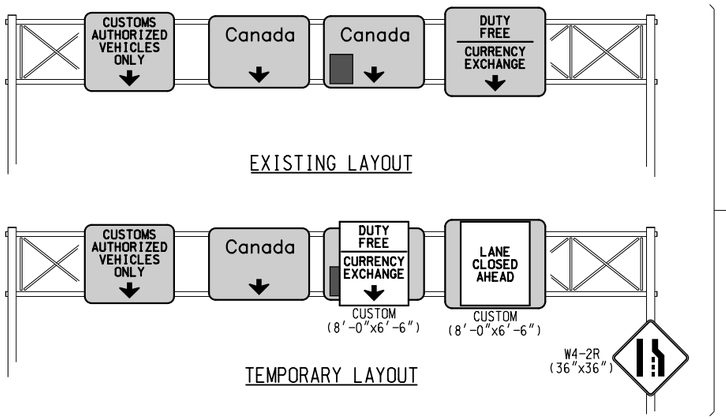

NOTES:

1. THE LIST OF TASKS NOTED WITHIN THIS DRAWING ARE GENERAL DESCRIPTIONS OF THE WORK THAT CAN BE ACCOMPLISHED WITHIN THE WORK ZONE FOR THIS STAGE. ADDITIONAL WORK MAY BE REQUIRED TO COMPLETE THE PROPOSED WORK WITHIN THIS CONTRACT.
2. SIGN LOCATIONS AS SHOWN ON PLANS ARE APPROXIMATE. THE CONTRACTOR SHALL INSTALL NEW SIGNS IN ACCORDANCE WITH MUTCD AND AS DIRECTED BY ENGINEER.
3. USING GRAPHICS AND DIMENSIONS PROVIDED AS A GUIDE, TEMPORARY CUSTOM SIGNS SHALL BE FULLY DESIGNED AND DETAILED BY THE CONTRACTOR AND SUBMITTED FOR APPROVAL BY ENGINEER PRIOR TO FABRICATION.

BUFFALO AND FORT ERIE PUBLIC BRIDGE AUTHORITY

PORT HARDENING PROGRAM 2020

GPI Engineering Design Planning Construction Management
716-633-4844 GPINET.COM
Greenman-Pedersen, Inc.
403 Main Street, Suite 330
Buffalo, NY 14203

TRAFFIC CONTROL PLAN STAGE 1

DESIGNED: T.P.C.	DRAWN: T.P.C.	CHECKED: T.L.
SCALE: 1"=50'-0"	DRAWING MPT-1	SHEET NO. 6 OF 23
DATE: JUNE 2020		

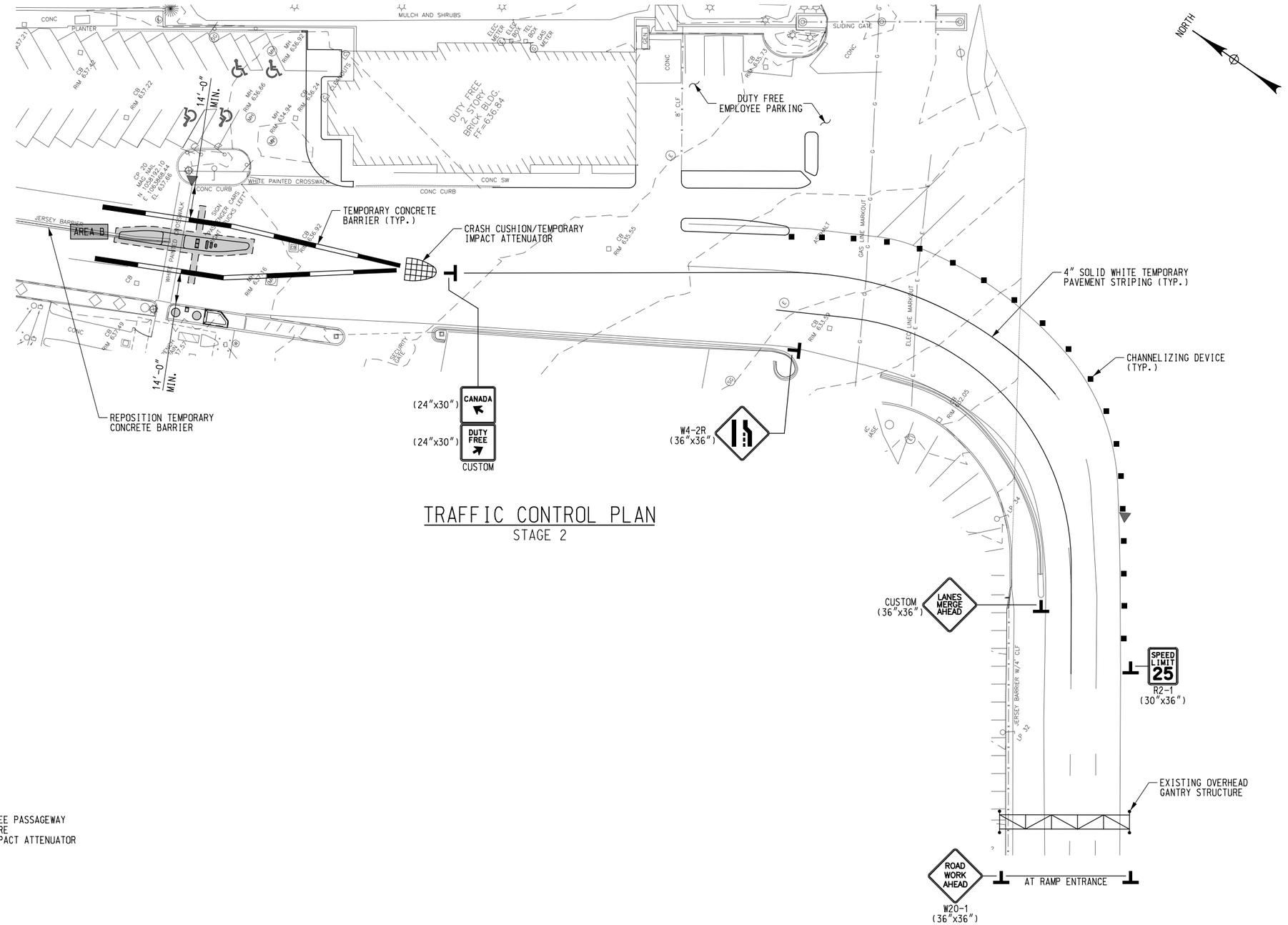

TRAFFIC CONTROL PLAN
STAGE 2

WORK TO BE COMPLETED IN STAGE 2:

WORK ZONE TRAFFIC CONTROL SETUP

1. REPAIR CHAIN LINK FENCE MODIFIED FOR DUTY FREE EMPLOYEE PASSAGEWAY
2. REMOVE TEMPORARY SIGN PANELS ON EXISTING SIGN STRUCTURE
3. INSTALL TEMPORARY BARRIER, CRASH CUSHION/TEMPORARY IMPACT ATTENUATOR AND CHANNELIZING DEVICES AS SHOWN
4. REMOVE CONFLICTING PAVEMENT STRIPING
5. PLACE WHITE TEMPORARY PAVEMENT STRIPING
6. INSTALL TEMPORARY SIGNS

AREA B

1. SAWCUT ASPHALT PAVEMENT AND REMOVE
2. TRENCH/BURY CONDUITS (WITHIN WORK ZONE)
3. INSTALL (2) SECURITY GATE FOUNDATIONS (WITH EMBEDDED CONDUITS)
4. INSTALL NEW CURBS
5. CONSTRUCT NEW TAPERED END SECTION BARRIER
6. INSTALL NEW SIDEWALKS AND REFUGE ISLAND INCLUDING DETECTABLE WARNING SURFACES
7. CONSTRUCT THREE DECORATIVE "BULLNOSE" BOLLARDS
8. REPAIR/INSTALL ASPHALT PAVEMENT
9. REPOSITION EXISTING TEMPORARY CONCRETE BARRIER TO ALIGN WITH NEW TAPERED END SECTION

NOTE: SINCE UTILITY TRENCH EXTENDS BEYOND WORK ZONE LIMITS, THE CONTRACTOR SHALL CORDINATE TRENCHING SEQUENCE, LANE CLOSURES, TRENCH PLATING REQUIREMENTS AND OVERALL CONSTRUCTION SEQUENCE WITH THE AUTORITY TO AVOID TRAFFIC INTERRUPTIONS.

NOTES:

1. FOR NOTES, SEE DRAWING MPT-1.

BUFFALO AND FORT ERIE
PUBLIC BRIDGE AUTHORITY

PORT HARDENING PROGRAM 2020

GPI Engineering Design Planning Construction Management
716-633-4844 GPINET.COM
Greenman-Pedersen, Inc.
403 Main Street, Suite 330
Buffalo, NY 14203

TRAFFIC CONTROL PLAN
STAGE 2

DESIGNED: T.P.C.	DRAWN: T.P.C.	CHECKED: T.L.
SCALE: 1"=50'-0"	DRAWING MPT-2	SHEET NO. 7 OF 23
DATE: JUNE 2020		

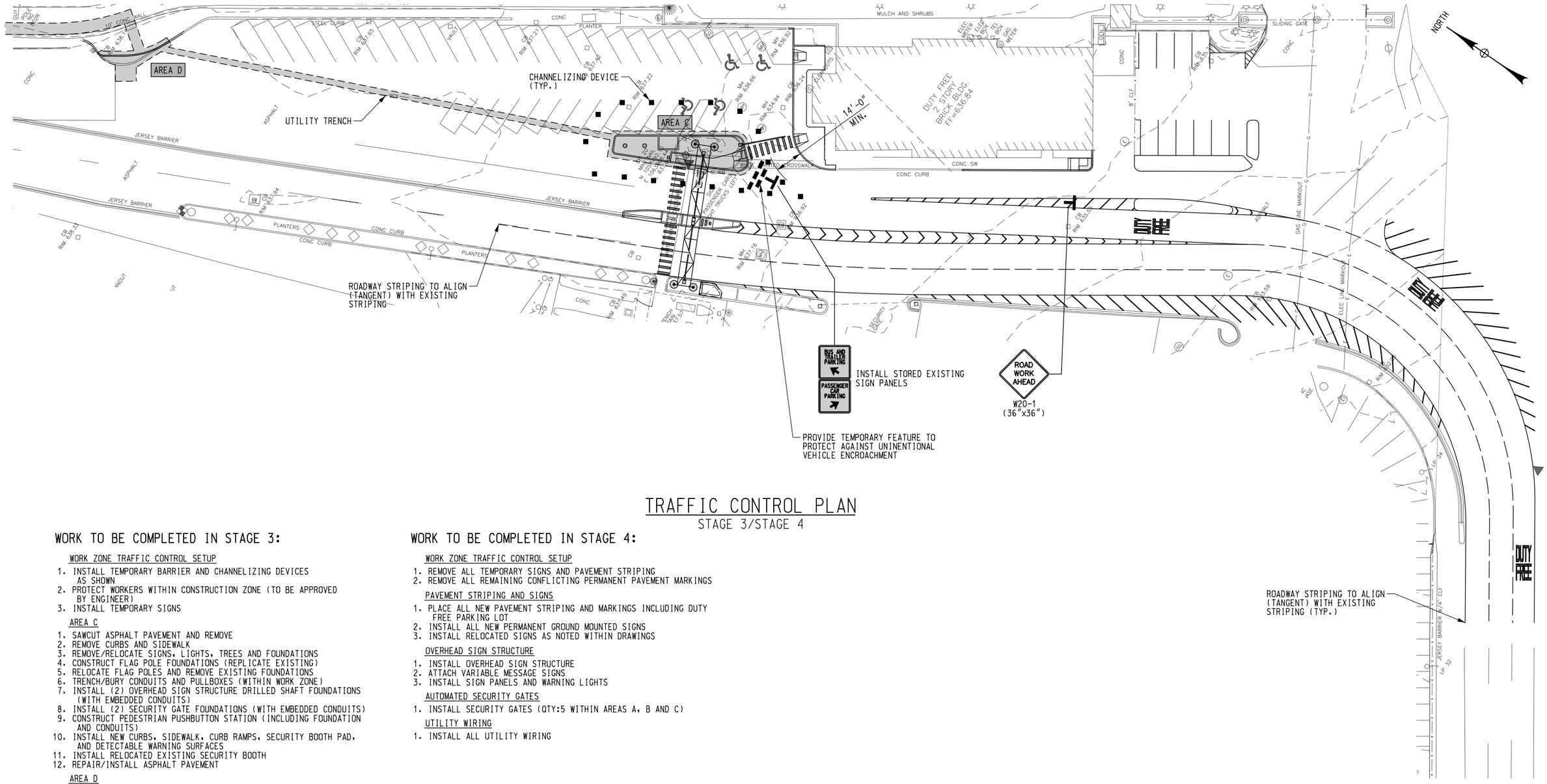

TRAFFIC CONTROL PLAN

STAGE 3/STAGE 4

WORK TO BE COMPLETED IN STAGE 3:

WORK ZONE TRAFFIC CONTROL SETUP

1. INSTALL TEMPORARY BARRIER AND CHANNELIZING DEVICES AS SHOWN
2. PROTECT WORKERS WITHIN CONSTRUCTION ZONE (TO BE APPROVED BY ENGINEER)
3. INSTALL TEMPORARY SIGNS

AREA C

1. SAWCUT ASPHALT PAVEMENT AND REMOVE
2. REMOVE CURBS AND SIDEWALK
3. REMOVE/RELOCATE SIGNS, LIGHTS, TREES AND FOUNDATIONS
4. CONSTRUCT FLAG POLE FOUNDATIONS (REPLICATE EXISTING)
5. RELOCATE FLAG POLES AND REMOVE EXISTING FOUNDATIONS
6. TRENCH/BURY CONDUITS AND PULLBOXES (WITHIN WORK ZONE)
7. INSTALL (2) OVERHEAD SIGN STRUCTURE DRILLED SHAFT FOUNDATIONS (WITH EMBEDDED CONDUITS)
8. INSTALL (2) SECURITY GATE FOUNDATIONS (WITH EMBEDDED CONDUITS)
9. CONSTRUCT PEDESTRIAN PUSHBUTTON STATION (INCLUDING FOUNDATION AND CONDUITS)
10. INSTALL NEW CURBS, SIDEWALK, CURB RAMPS, SECURITY BOOTH PAD, AND DETECTABLE WARNING SURFACES
11. INSTALL RELOCATED EXISTING SECURITY BOOTH
12. REPAIR/INSTALL ASPHALT PAVEMENT

AREA D

1. SAWCUT ASPHALT PAVEMENT AND REMOVE
2. TRENCH/BURY CONDUITS AND PULLBOXES (WITHIN WORK ZONE AND BETWEEN AREAS C AND D)
3. TRENCH/BURY/SUPPORT CONDUITS AND PULLBOXES (BETWEEN AREA D AND WITHIN THE VAULT SPANS)
4. CORE CONDUITS THROUGH CONCRETE CURTAIN WALL AND INSTALL CONDUITS WITHIN THE VAULT SPANS (LAYOUT T.B.D.)
5. REPAIR AFFECTED CONCRETE VAULT FLOOR
6. SAWCUT CURB AND REMOVE PORTION OF CURB
7. INSTALL NEW CURBS
8. INSTALL CONCRETE AND ASPHALT PAVEMENT
9. REPAIR ASPHALT PAVEMENT

NOTE: SINCE UTILITY TRENCH EXTENDS BEYOND WORK ZONE LIMITS, THE CONTRACTOR SHALL CORDINATE TRENCHING SEQUENCE, IMPACTS ON PARKING AND EXIT, TRENCH PLATING REQUIREMENTS AND OVERALL CONSTRUCTION SEQUENCE WITH THE AUTORITY TO AVOID TRAFFIC INTERRUPTIONS.

WORK TO BE COMPLETED IN STAGE 4:

WORK ZONE TRAFFIC CONTROL SETUP

1. REMOVE ALL TEMPORARY SIGNS AND PAVEMENT STRIPING
2. REMOVE ALL REMAINING CONFLICTING PERMANENT PAVEMENT MARKINGS

PAVEMENT STRIPING AND SIGNS

1. PLACE ALL NEW PAVEMENT STRIPING AND MARKINGS INCLUDING DUTY FREE PARKING LOT
2. INSTALL ALL NEW PERMANENT GROUND MOUNTED SIGNS
3. INSTALL RELOCATED SIGNS AS NOTED WITHIN DRAWINGS

OVERHEAD SIGN STRUCTURE

1. INSTALL OVERHEAD SIGN STRUCTURE
2. ATTACH VARIABLE MESSAGE SIGNS
3. INSTALL SIGN PANELS AND WARNING LIGHTS

AUTOMATED SECURITY GATES

1. INSTALL SECURITY GATES (QTY:5 WITHIN AREAS A, B AND C)

UTILITY WIRING

1. INSTALL ALL UTILITY WIRING

NOTES:

1. FOR NOTES, SEE DRAWING MPT-1.

BUFFALO AND FORT ERIE PUBLIC BRIDGE AUTHORITY

PORT HARDENING PROGRAM 2020

GPI Engineering Design Planning Construction Management
716-633-4844 GPINET.COM

Greenman-Pedersen, Inc.
403 Main Street, Suite 330
Buffalo, NY 14203

TRAFFIC CONTROL PLAN
STAGE 3/STAGE 4

DESIGNED: T.P.C.	DRAWN: T.P.C.	CHECKED: T.L.
SCALE: 1"=50'-0"	DRAWING MPT-3	SHEET NO. 8 OF 23
DATE: JUNE 2020		

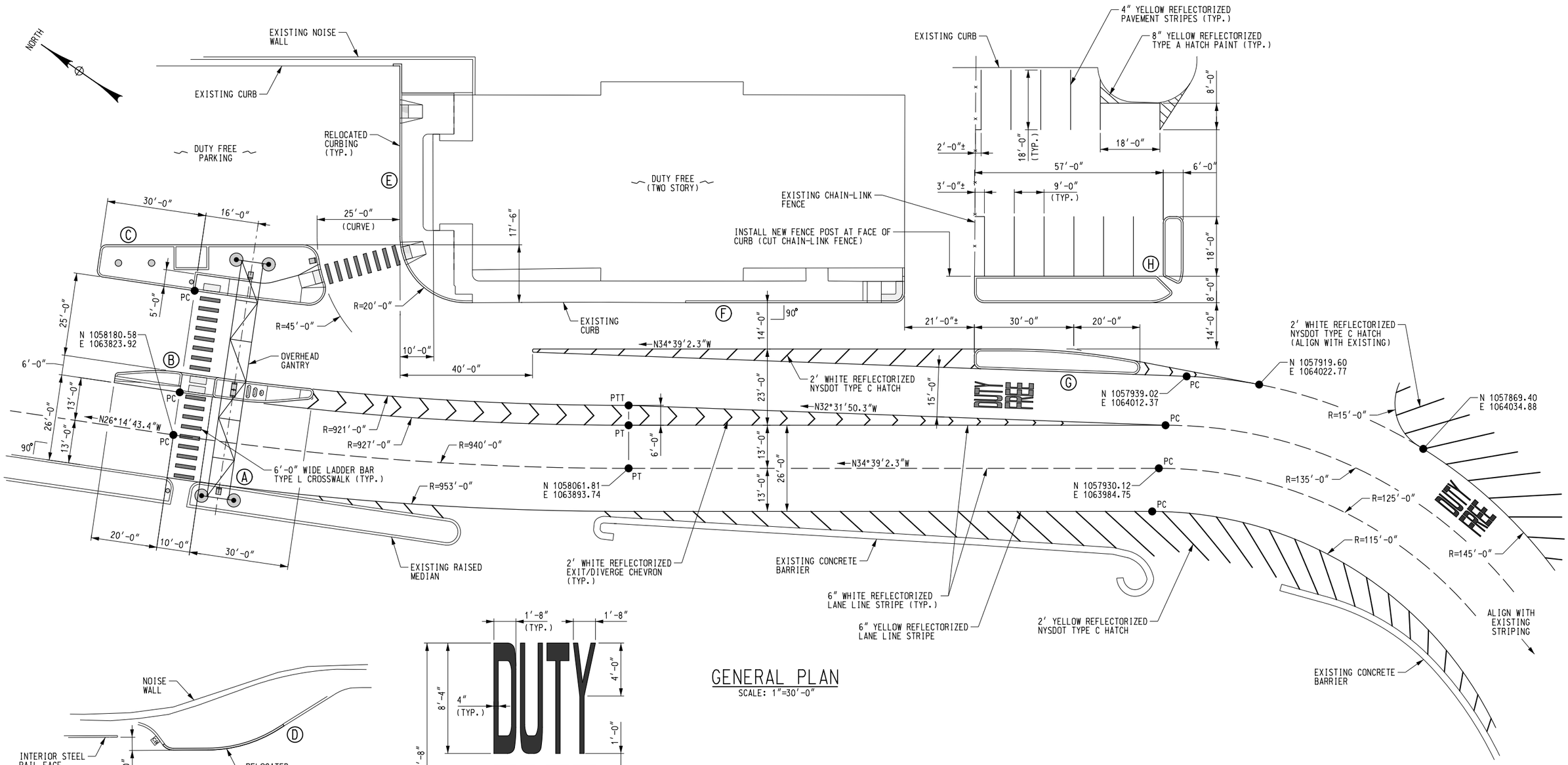

GENERAL PLAN
SCALE: 1"=30'-0"

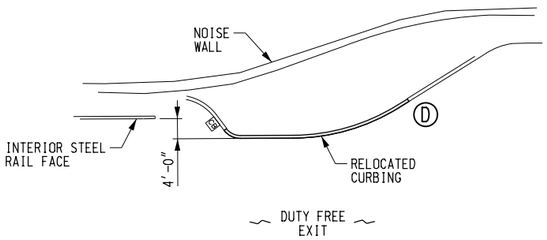

GENERAL PLAN
DUTY FREE EXIT

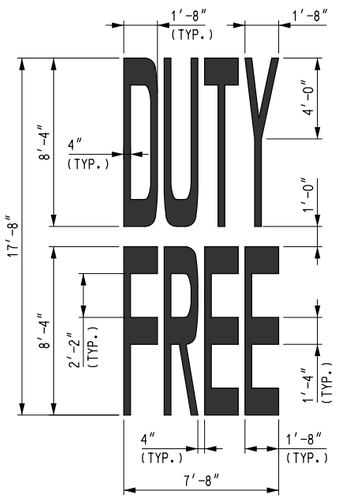

PAVEMENT MARKING LETTERS
NOT TO SCALE
QTY: 3

NOTES:

1. DUE TO THE COMPLEXITY OF STRIPING, THE CONTRACTOR SHALL SUBMIT PAVEMENT MARKING PLANS FOR APPROVAL BY THE ENGINEER PRIOR TO ANY PLACEMENT.
2. ALL PAVEMENT MARKINGS SHALL BE EPOXY REFLECTORIZED STRIPING PER THE PROJECT SPECIFICATIONS AND SHALL BE PLACED IN ACCORDANCE WITH THE MUTCD AND NYS SUPPLEMENT.
3. "DUTY FREE" PAVEMENT MARKINGS SHALL BE WHITE THERMOSPLASTIC REFLECTORIZED PAVEMENT MARKINGS PLACED AT LOCATIONS SHOWN.
4. EXISTING STRIPING NOT SHOWN FOR CLARITY. ALL EXISTING STRIPING (INCLUDING PARKING LOT) SHALL BE REMOVED WITHIN PROJECT AREA.

BUFFALO AND FORT ERIE
PUBLIC BRIDGE AUTHORITY

PORT HARDENING PROGRAM 2020

GPI Engineering Design Planning Construction Management
716-633-4844 GPINET.COM
Greenman-Pedersen, Inc.
403 Main Street, Suite 330
Buffalo, NY 14203

CURB/STRIPING LAYOUT

DESIGNED: T.P.C.	DRAWN: T.P.C.	CHECKED: T.L.
SCALE: AS NOTED	DRAWING L-1	SHEET NO. 9 OF 23
DATE: JUNE 2020		

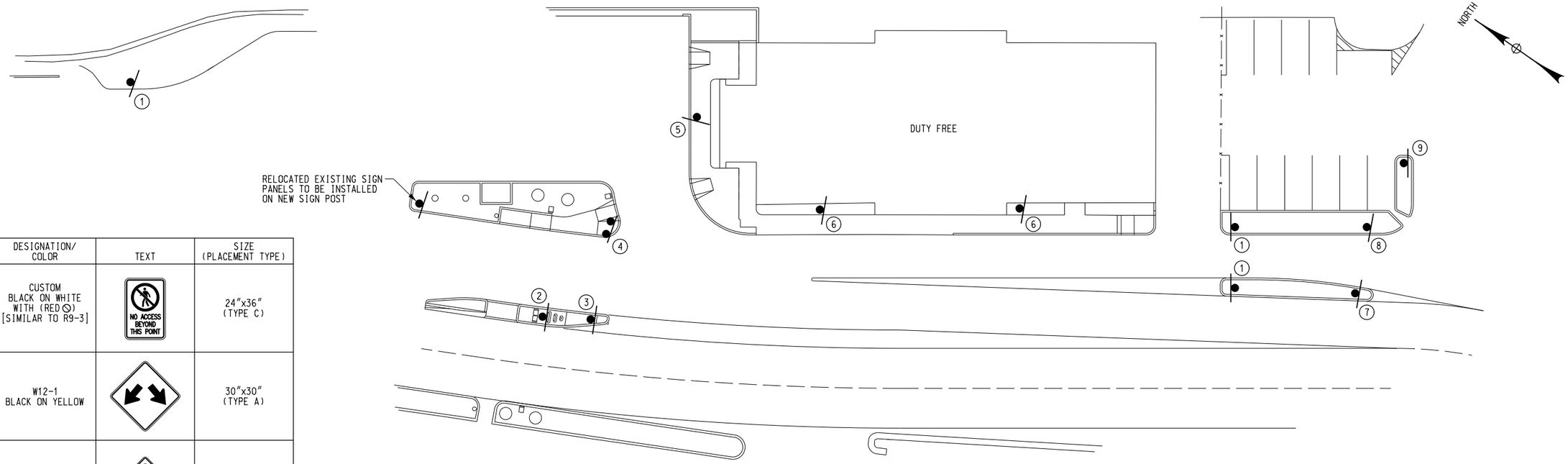

LOCATION/ QUANTITY	DESIGNATION/ COLOR	TEXT	SIZE (PLACEMENT TYPE)
1 [3]	CUSTOM BLACK ON WHITE WITH (RED ⊘) [SIMILAR TO R9-3]	NO ACCESS BEYOND THIS POINT	24″x36″ (TYPE C)
2 [1]	W12-1 BLACK ON YELLOW		30″x30″ (TYPE A)
3 [1]	OM1-1 YELLOW REFLECTOR		18″x18″ (TYPE C)
4 [1]	CUSTOM WHITE ON BLUE	DUTY FREE PARKING ← TRUCKS TRAILERS CARS →	24″x42″ (TYPE B)
5 [1]	R7-1 RED ON WHITE	NO PARKING ANY TIME ↔	12″x18″ (TYPE A)
6 [2]	R7-107 (SIMILAR) RED ON WHITE	NO PARKING BUS LOADING ONLY	12″x18″ (TYPE A)
7 [1]	CUSTOM BLACK ON WHITE	DUTY FREE BUS ENTRANCE ONLY ↘	24″x36″ (TYPE A)
8 [1]	CUSTOM BLACK ON WHITE	DUTY FREE BUS ENTRANCE ONLY ↙	24″x36″ (TYPE A)
9 [1]	CUSTOM BLACK ON WHITE	EMPLOYEE PARKING ONLY	24″x24″ (TYPE A)

LOCATION/ QUANTITY	DESIGNATION/ COLOR	TEXT	SIZE
OVERHEAD GANTRY POSTS [2]	W11-2 BLACK ON YELLOW		30″x30″
OVERHEAD GANTRY POSTS [1]	W16-7P BLACK ON YELLOW		12″x24″
OVERHEAD GANTRY POSTS [1]	W16-7P BLACK ON YELLOW		12″x24″
PEDESTRIAN PUSHBUTTON STATION [2]	R10-25 BLACK ON WHITE	PUSH BUTTON TO TURN ON WARNING LIGHTS	9″x12″
OVERHEAD GANTRY STRUCTURE [2]	R5-1a (CUSTOM) WHITE ON RED	WRONG WAY	8′-6″ x 11′-0″

SIGN LAYOUT

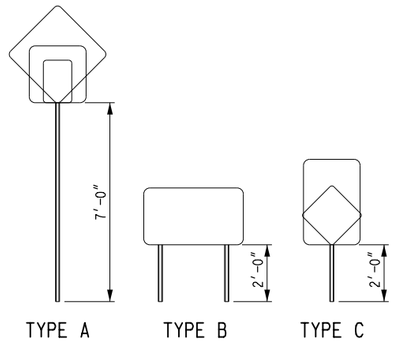

SIGN PLACEMENT

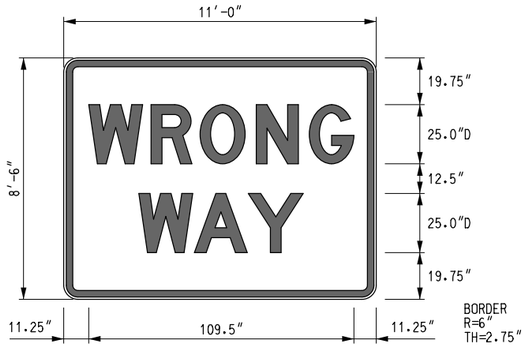

LETTER POSITIONS (X)						
					LENGTH	SERIES/SIZE
W	R	O	N	G		D 2000
11.3	37.3	58.0	81.3	103.8	109.5	25
W	A	Y				D 2000
32	55.8	78.5			68	25

WRONG WAY SIGN DETAILS

R5-1a EXTRA LARGE

NOTES:

1. SIGN LOCATIONS AS SHOWN ON PLANS ARE APPROXIMATE. THE CONTRACTOR SHALL INSTALL NEW SIGNS IN ACCORDANCE WITH MUTCD AND AS DIRECTED BY ENGINEER.
2. USING GRAPHICS AND DIMENSIONS PROVIDED AS A GUIDE, PERMANENT CUSTOM SIGNS SHALL BE FULLY DESIGNED AND DETAILED BY THE CONTRACTOR AND SUBMITTED FOR APPROVAL BY ENGINEER PRIOR TO FABRICATION.
3. FOR PAVEMENT STRIPING, SEE DRAWING L-1.

BUFFALO AND FORT ERIE PUBLIC BRIDGE AUTHORITY

PORT HARDENING PROGRAM 2020

GPI Engineering Design Planning Construction Management
716-633-4844 GPINET.COM
Greenman-Pedersen, Inc.
403 Main Street, Suite 330
Buffalo, NY 14203

PERMANENT SIGN LAYOUT AND DETAILS

DESIGNED: T.P.C.	DRAWN: T.P.C.	CHECKED: T.L.
SCALE: N.T.S.	DRAWING SP-1	SHEET NO. 10 OF 23
DATE: JUNE 2020		

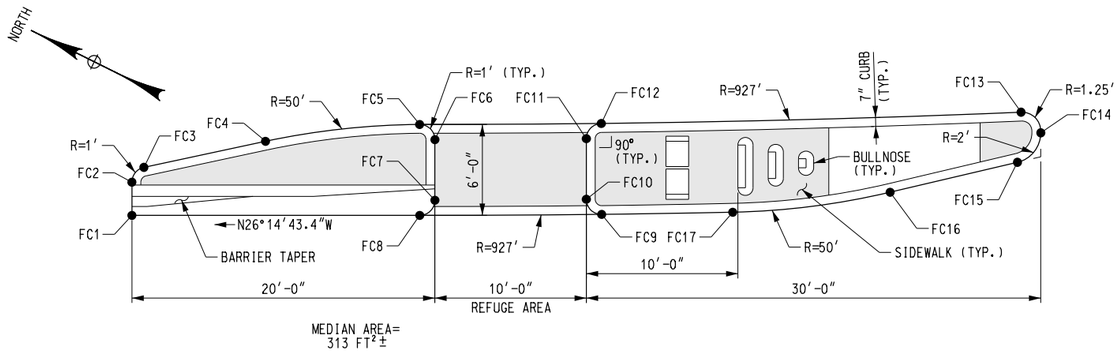

Ⓑ LAYOUT

GEOMETRY		
POINT NAME	NORTHING	EASTING
FC1	1058204.27	1063826.74
FC2	1058205.24	1063828.70
FC3	1058204.96	1063829.93
FC4	1058198.52	1063835.02
FC5	1058189.88	1063840.52
FC6	1058188.54	1063840.07
FC7	1058186.77	1063836.48
FC8	1058187.23	1063835.14
FC9	1058176.48	1063840.51
FC10	1058177.83	1063840.96
FC11	1058179.60	1063844.55
FC12	1058179.16	1063845.88
FC13	1058154.63	1063858.81
FC14	1058152.86	1063858.16
FC15	1058153.38	1063855.73
FC16	1058160.05	1063850.24
FC17	1058168.78	1063844.46

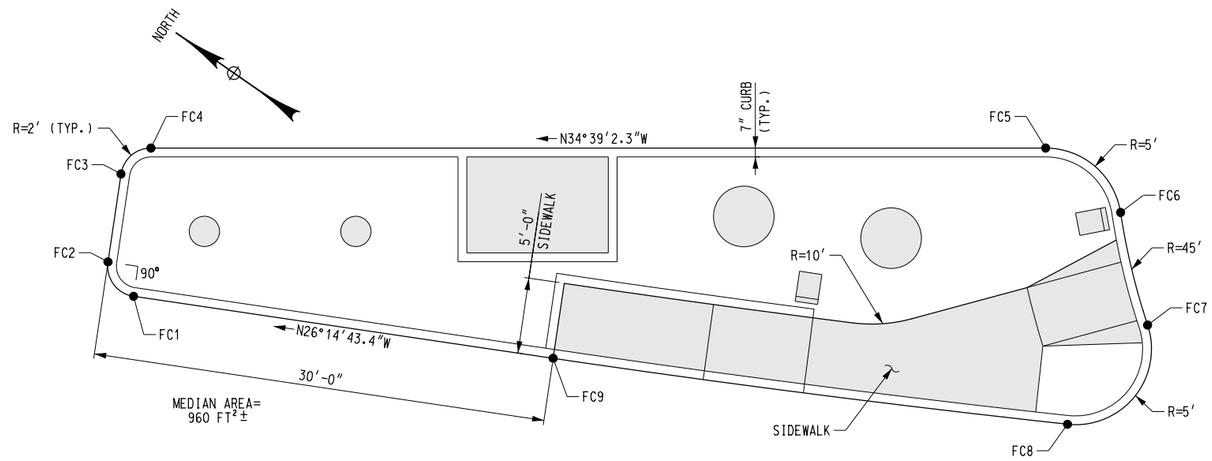

Ⓒ LAYOUT

GEOMETRY		
POINT NAME	NORTHING	EASTING
FC1	1058225.15	1063851.00
FC2	1058227.83	1063851.91
FC3	1058230.42	1063857.18
FC4	1058229.77	1063859.71
FC5	1058181.18	1063893.29
FC6	1058174.70	1063892.60
FC7	1058169.00	1063887.50
FC8	1058169.63	1063879.11
FC9	1058200.04	1063863.39

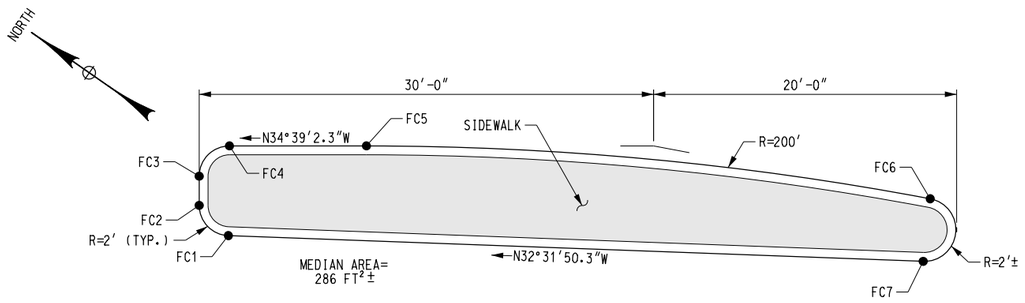

Ⓖ LAYOUT

GEOMETRY		
POINT NAME	NORTHING	EASTING
FC1	1057991.47	1063978.92
FC2	1057994.19	1063979.46
FC3	1057995.28	1063981.05
FC4	1057994.77	1063983.83
FC5	1057987.34	1063988.97
FC6	1057954.73	1064007.26
FC7	1057952.77	1064003.60

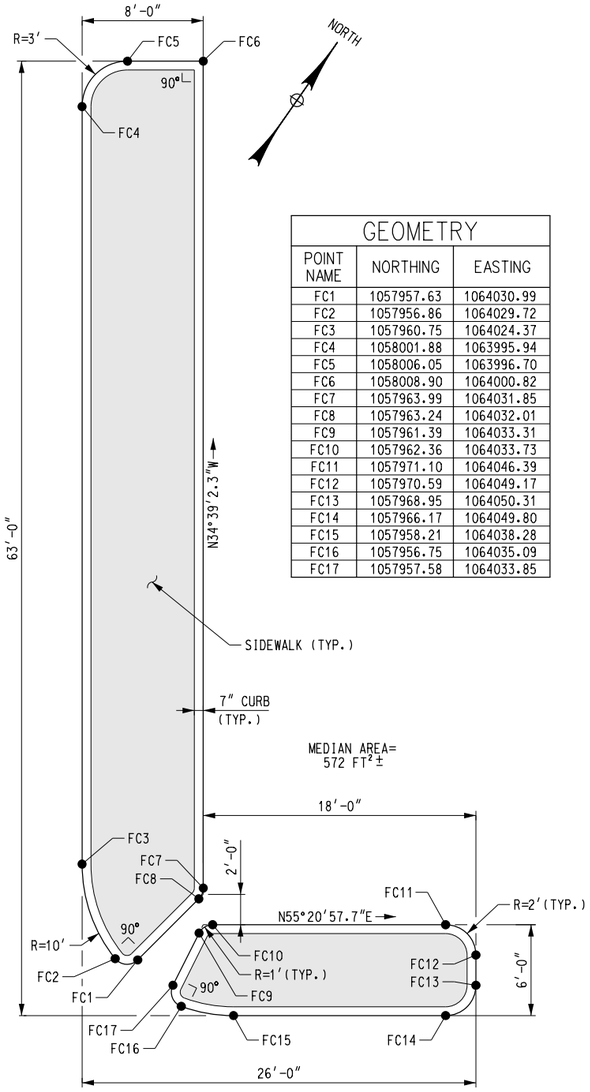

Ⓗ LAYOUT

GEOMETRY		
POINT NAME	NORTHING	EASTING
FC1	1057957.63	1064030.99
FC2	1057956.86	1064029.72
FC3	1057960.75	1064024.37
FC4	1058001.88	1063995.94
FC5	1058006.05	1063996.70
FC6	1058008.90	1064000.82
FC7	1057963.99	1064031.85
FC8	1057963.24	1064032.01
FC9	1057961.39	1064033.31
FC10	1057962.36	1064033.73
FC11	1057971.10	1064046.39
FC12	1057970.59	1064049.17
FC13	1057968.95	1064050.31
FC14	1057966.17	1064049.80
FC15	1057958.21	1064038.28
FC16	1057956.75	1064035.09
FC17	1057957.58	1064033.85

NOTES:

1. FOR ADDITIONAL MEDIAN DETAILS, SEE DRAWINGS CS-1, CS-2 AND CS-5.
2. PROVIDED AREAS ARE APPROXIMATE AND FOR REFERENCE ONLY. THE CONTRACTOR SHALL DETERMINE ACTUAL AREAS TO FACILIATE BIDDING.

BUFFALO AND FORT ERIE
PUBLIC BRIDGE AUTHORITY

PORT HARDENING PROGRAM 2020

GPI Engineering Design Planning Construction Management
716-633-4844 GPINET.COM

Greenman-Pedersen, Inc.
403 Main Street, Suite 330
Buffalo, NY 14203

MEDIAN GEOMETRY LAYOUT

DESIGNED: T.P.C.	DRAWN: T.P.C.	CHECKED: T.L.
SCALE: 1"=10'-0"	DRAWING M-1	SHEET NO. 11 OF 23
DATE: JUNE 2020		

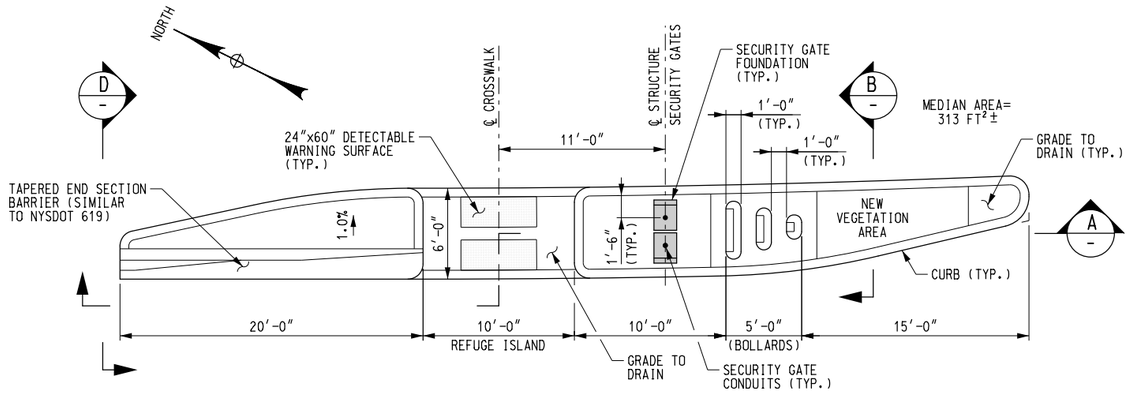

PLAN

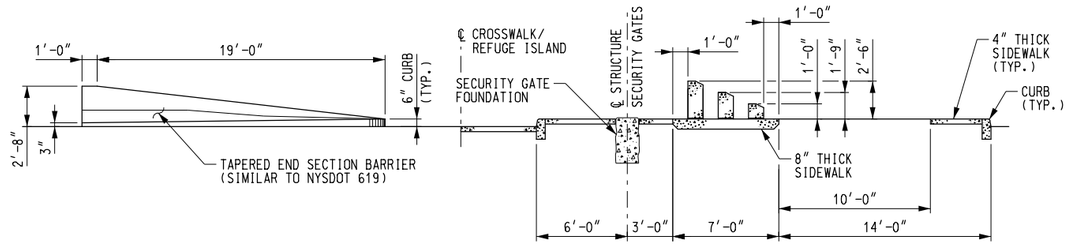

A SECTION

(B) CONCRETE LAYOUT

SCALE: 1″=10′-0″

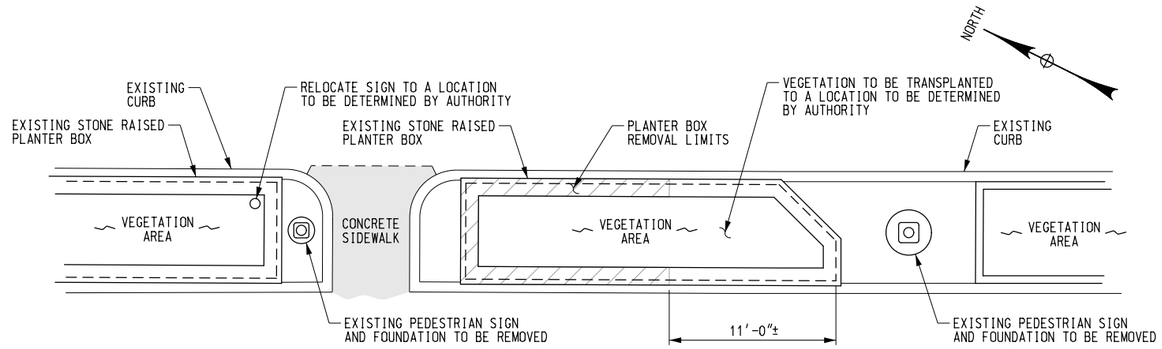

DEMOLITION PLAN

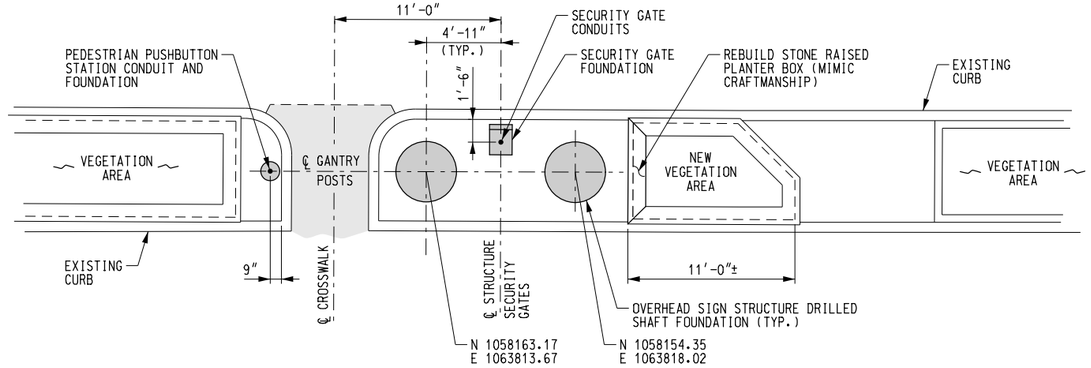

PROPOSED PLAN

(A) CONCRETE LAYOUT

SCALE: 1″=10′-0″

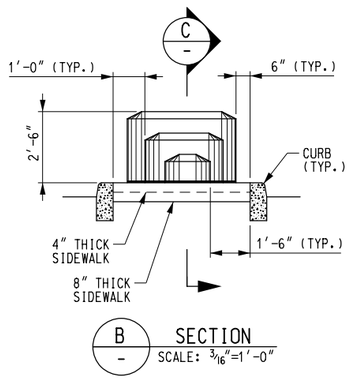

B SECTION

SCALE: 3/16″=1′-0″

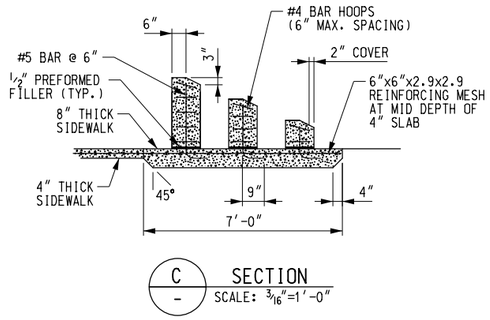

C SECTION

SCALE: 3/16″=1′-0″

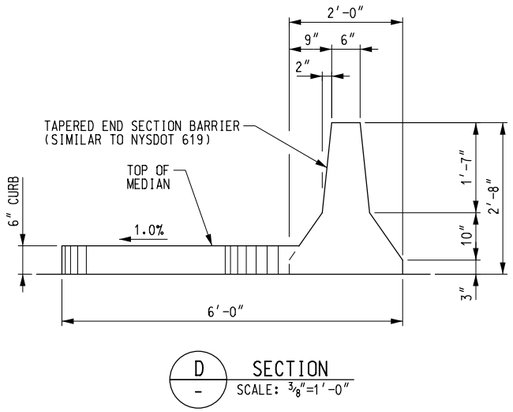

D SECTION

SCALE: 3/8″=1′-0″

NOTES:

1. FOR ADDITIONAL GEOMETRY INFORMATION, SEE DRAWING M-1.
2. FOR CURB AND SIDEWALK DETAILS, SEE DRAWING CS-5.
3. TAPERED END SECTION BARRIER SHALL MIMIC THE TEMPORARY CONCRETE BARRIER TAPERED END SECTION DETAILED WITHIN NYSDOT STANDARD SHEET 619-01. USING THE STANDARD SHEET AS A GUIDE, THE CONTRACTOR SHALL DETAIL THE FORMWORK AND REINFORCEMENT WHICH SHALL BE SUBMITTED FOR APPROVAL BY ENGINEER PRIOR TO WORK.
4. THE CONTRACTOR SHALL ADJUST THE EXISTING CONCRETE BARRIER SECTIONS (LOCATED NORTH OF THE MEDIAN) SO THAT THE LEADING EDGE ALIGNS AND BUTTS UP AGAINST THE NEW TAPERED END SECTION BARRIER. THE OVERALL ALIGNMENT OF THE BARRIER SHALL REMAIN UNCHANGED. ALTERING THE LEADING BARRIER SECTION MAY BE PERMITTED WITH APPROVAL BY ENGINEER.
5. PROVIDED AREAS ARE APPROXIMATE AND FOR REFERENCE ONLY. THE CONTRACTOR SHALL DETERMINE ACTUAL AREAS TO FACILIATE BIDDING.

BUFFALO AND FORT ERIE
PUBLIC BRIDGE AUTHORITY

PORT HARDENING PROGRAM 2020

GPI Engineering Design Planning Construction Management
716-633-4844 GPINET.COM

Greenman-Pedersen, Inc.
403 Main Street, Suite 330
Buffalo, NY 14203

CURB/SIDEWALK DETAILS (1 OF 5)

DESIGNED: T.P.C.	DRAWN: T.P.C.	CHECKED: T.L.
SCALE: AS NOTED	DRAWING CS-1	SHEET NO. 12 OF 23
DATE: JUNE 2020		

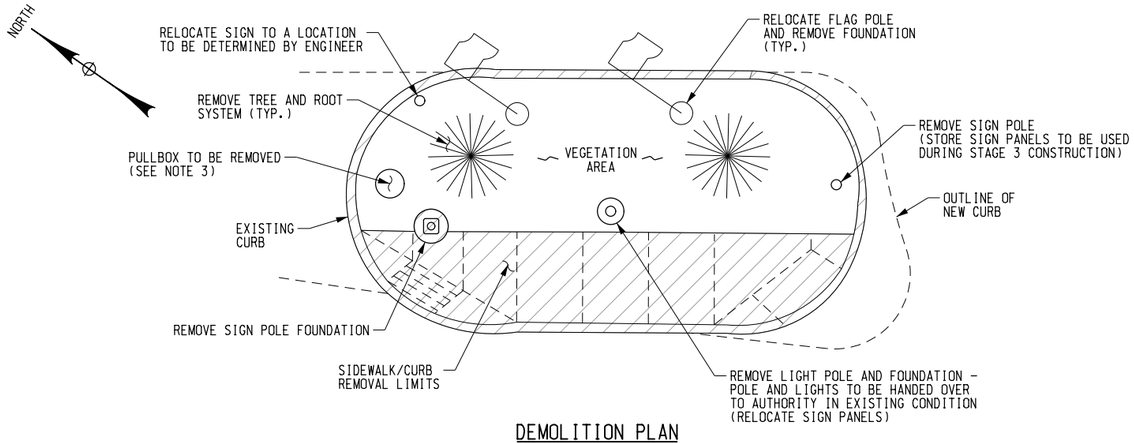

DEMOLITION PLAN

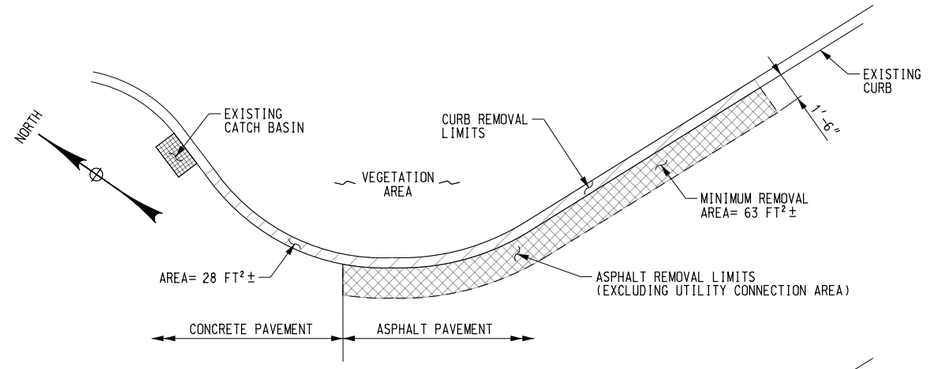

DEMOLITION PLAN

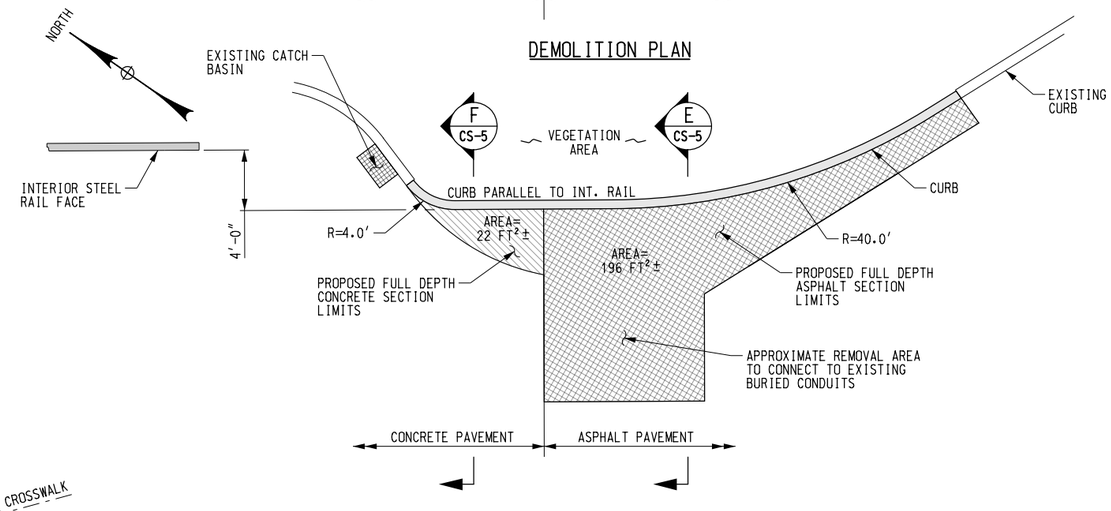

PROPOSED PLAN

Ⓓ CONCRETE LAYOUT

SCALE: 1"=10'-0"

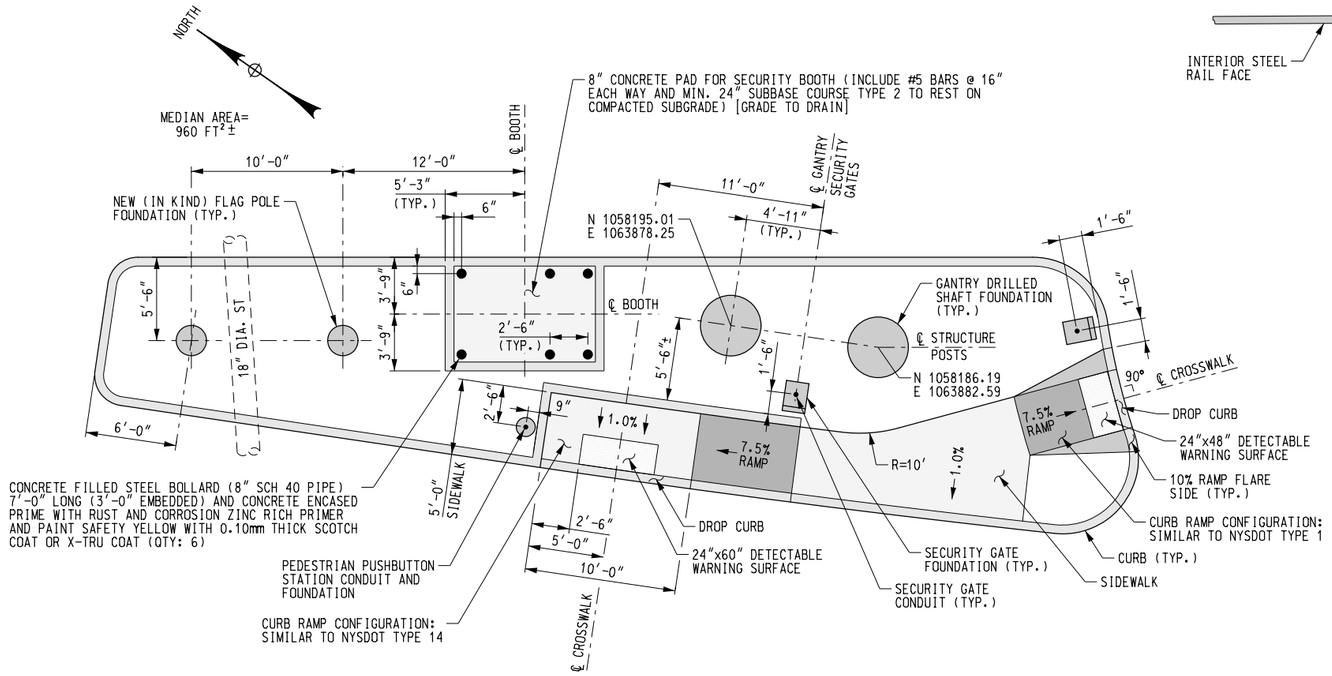

PROPOSED PLAN

Ⓒ CONCRETE LAYOUT

SCALE: 1"=10'-0"

NOTES:

1. FOR ADDITIONAL GEOMETRY INFORMATION, SEE DRAWING M-1.
2. FOR CURB AND SIDEWALK DETAILS, SEE DRAWING CS-5.
3. EXISTING PULL BOX INCLUDES MULTIPLE CONDUITS. ALL CONDUITS SHALL BE REMOVED WITHIN SAWCUT REMOVAL AREA. PLUG ENDS OF REMAINING CONDUITS.
4. PROVIDED AREAS ARE APPROXIMATE AND FOR REFERENCE ONLY. THE CONTRACTOR SHALL DETERMINE ACTUAL AREAS TO FACILIATE BIDDING.
5. UTILITY TRENCHING NOT SHOWN.

BUFFALO AND FORT ERIE PUBLIC BRIDGE AUTHORITY

PORT HARDENING PROGRAM 2020

GPI Engineering Design Planning Construction Management
716-633-4844 GPINET.COM
Greenman-Pedersen, Inc.
403 Main Street, Suite 330
Buffalo, NY 14203

CURB/SIDEWALK DETAILS (2 OF 5)

DESIGNED: T.P.C.	DRAWN: T.P.C.	CHECKED: T.L.
SCALE: 1"=10'-0"	DRAWING CS-2	SHEET NO. 13 OF 23
DATE: JUNE 2020		

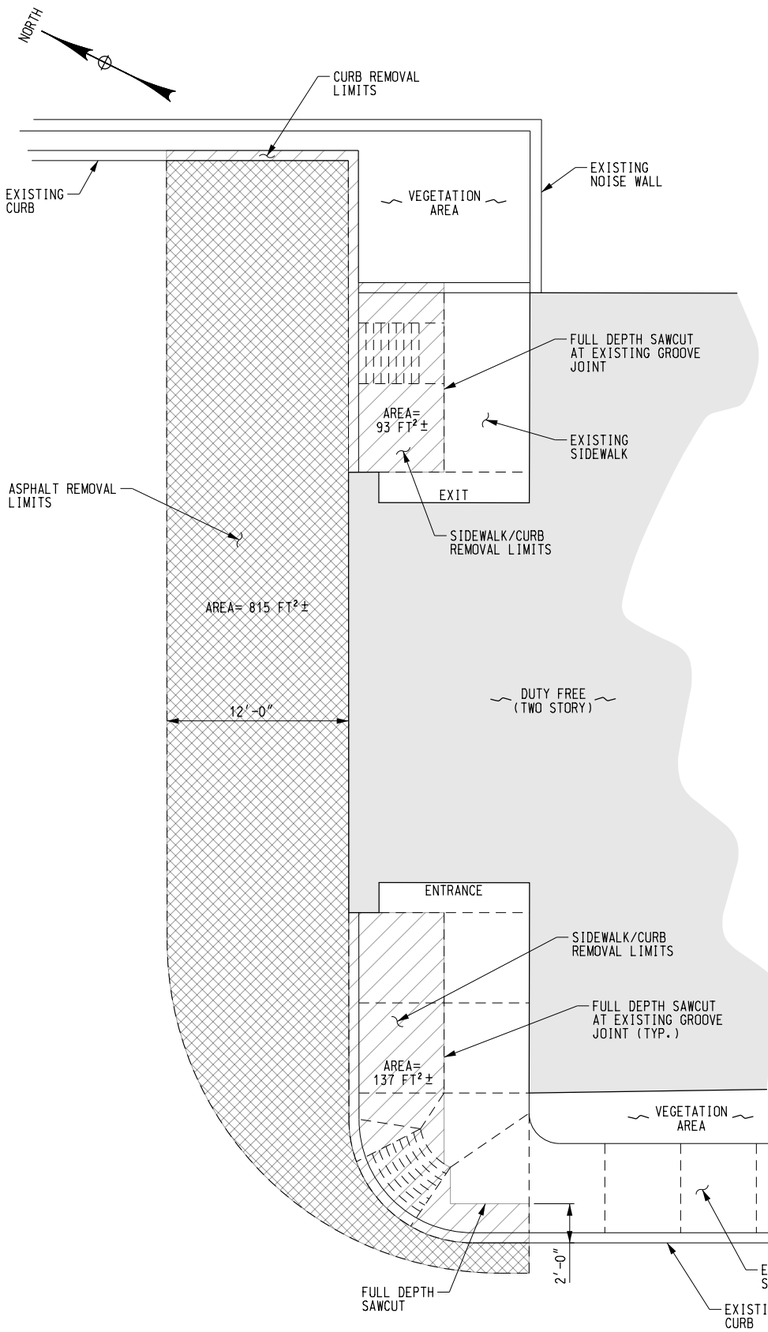

DEMOLITION PLAN

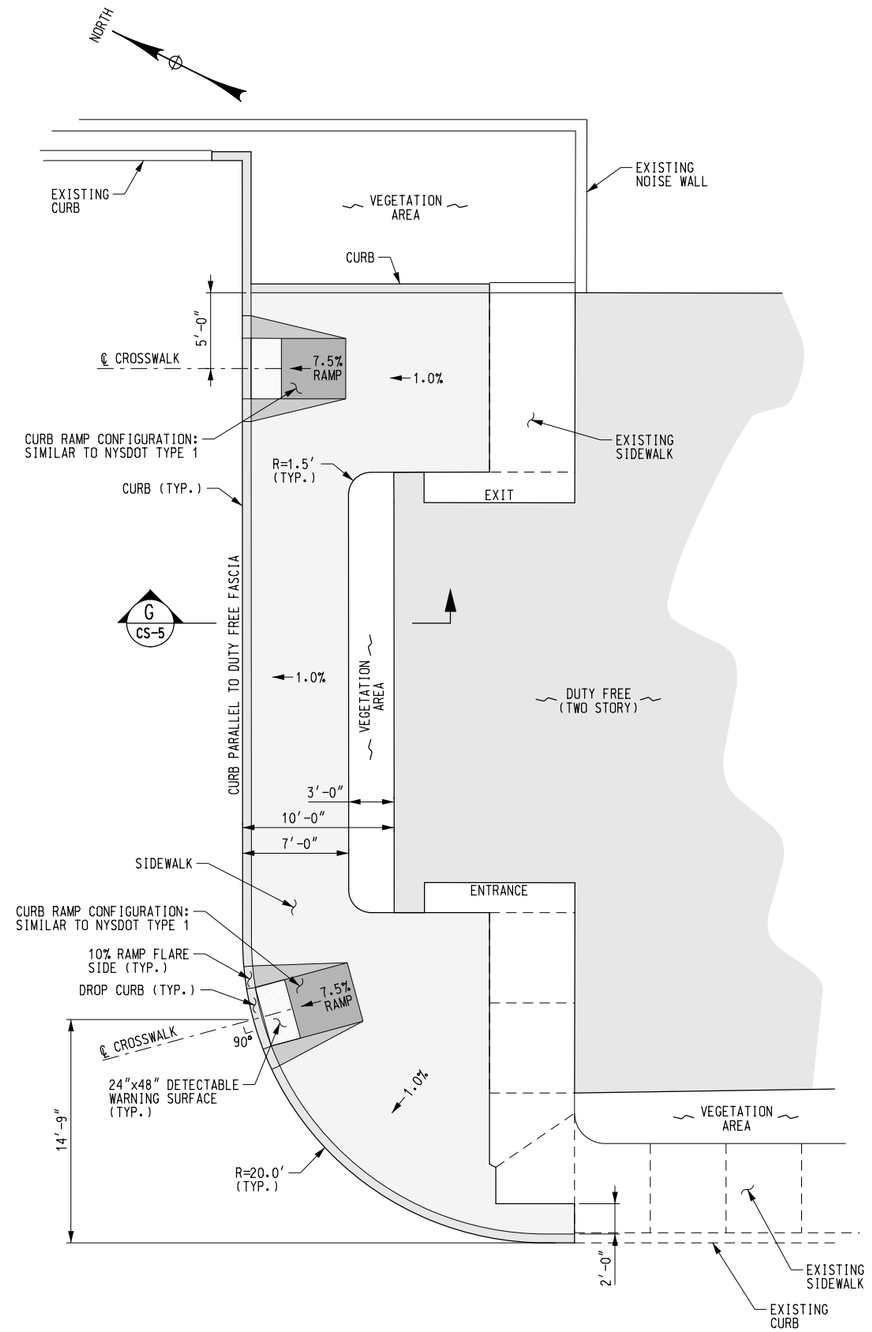

PROPOSED PLAN

Ⓔ CONCRETE LAYOUT

SCALE: 1″=10′-0″

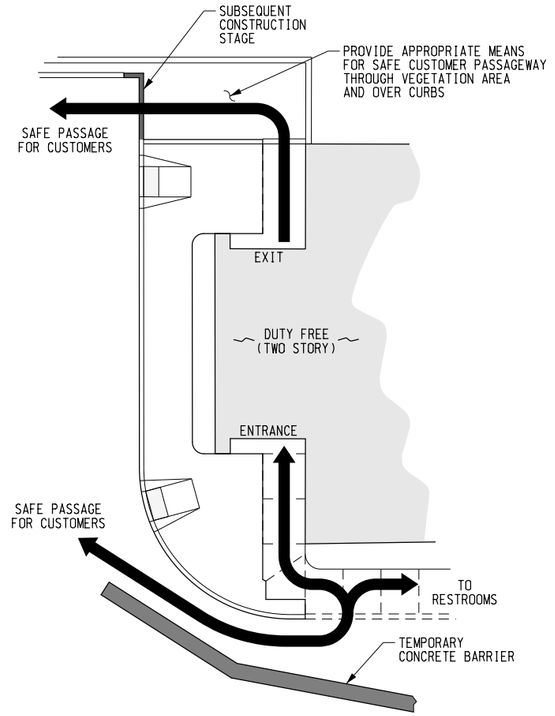

PEDESTRIAN ACCOMODATIONS

NOT TO SCALE

NOTES:

1. FOR CURB AND SIDEWALK DETAILS, SEE DRAWING CS-5.
2. PROVIDED AREAS ARE APPROXIMATE AND FOR REFERENCE ONLY. THE CONTRACTOR SHALL DETERMINE ACTUAL AREAS TO FACILIATE BIDDING.

BUFFALO AND FORT ERIE PUBLIC BRIDGE AUTHORITY

PORT HARDENING PROGRAM 2020

GPI Engineering Design Planning Construction Management
716-633-4844 GPINET.COM
Greenman-Pedersen, Inc.
403 Main Street, Suite 330
Buffalo, NY 14203

CURB/SIDEWALK DETAILS (3 OF 5)

DESIGNED: T.P.C.	DRAWN: T.P.C.	CHECKED: T.L.
SCALE: AS NOTED	DRAWING CS-3	SHEET NO. 14 OF 23
DATE: JUNE 2020		

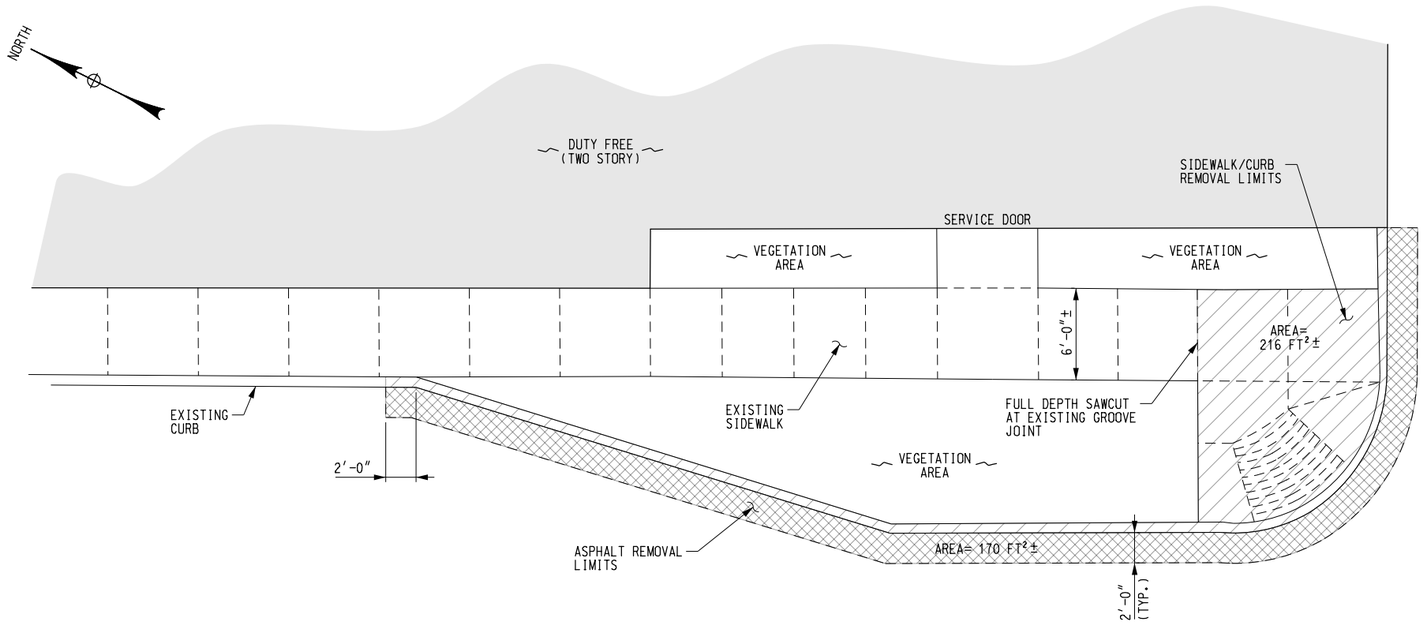

DEMOLITION PLAN

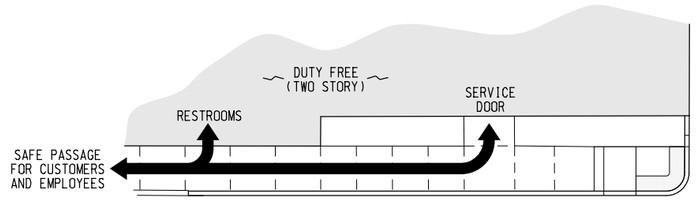

PEDESTRIAN ACCOMODATIONS

NOT TO SCALE

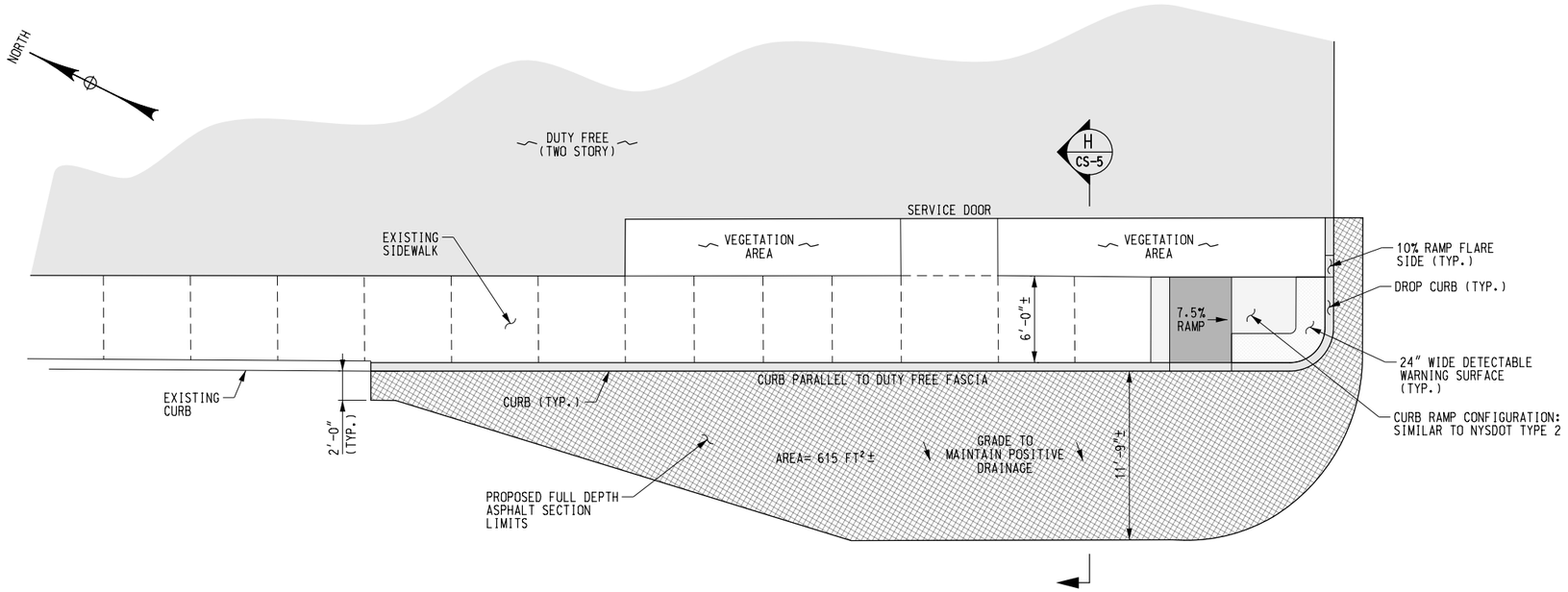

PROPOSED PLAN

(F) CONCRETE LAYOUT

SCALE: 1"=10'-0"

NOTES:

1. FOR CURB AND SIDEWALK DETAILS, SEE DRAWING CS-5.
2. PROVIDED AREAS ARE APPROXIMATE AND FOR REFERENCE ONLY. THE CONTRACTOR SHALL DETERMINE ACTUAL AREAS TO FACILIATE BIDDING.

BUFFALO AND FORT ERIE
PUBLIC BRIDGE AUTHORITY

PORT HARDENING PROGRAM 2020

GPI Engineering Design Planning Construction Management
716-633-4844 GPINET.COM
Greenman-Pedersen, Inc.
403 Main Street, Suite 330
Buffalo, NY 14203

CURB/SIDEWALK DETAILS
(4 OF 5)

DESIGNED: T.P.C.	DRAWN: T.P.C.	CHECKED: T.L.
SCALE: AS NOTED	DRAWING CS-4	SHEET NO. 15 OF 23
DATE: JUNE 2020		

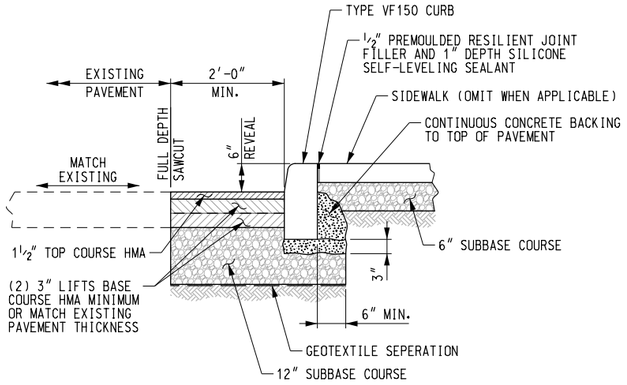

MEDIAN CURB/PAVEMENT RECONSTRUCTION DETAIL
SCALE: 3/8"=1'-0"

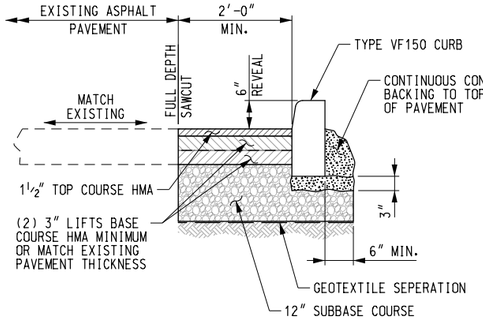

E CS-2 SECTION
SCALE: 3/8"=1'-0"

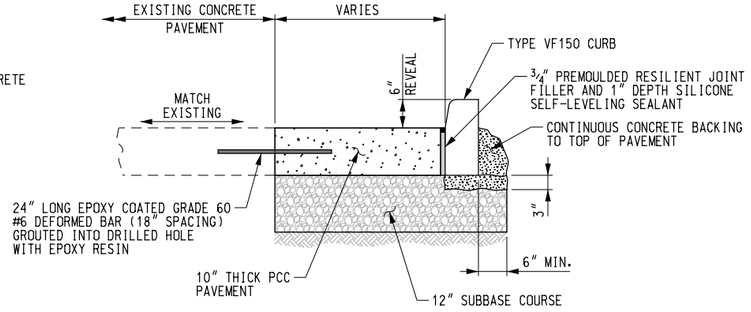

F CS-2 SECTION
SCALE: 3/8"=1'-0"

(D) CONCRETE LAYOUT

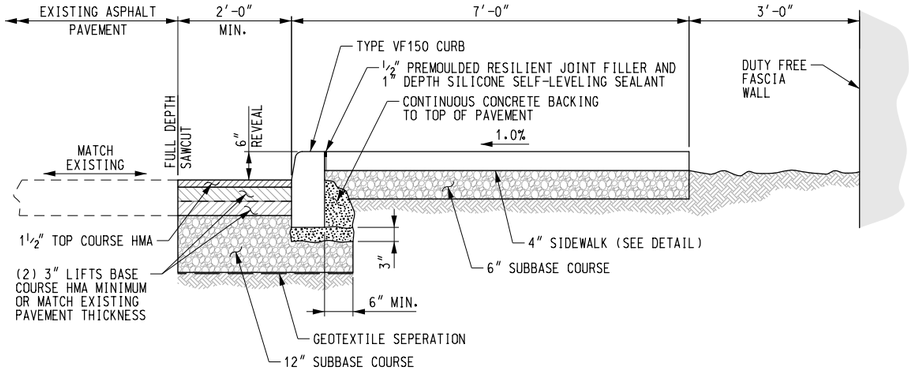

G CS-3 SECTION
SCALE: 3/8"=1'-0"

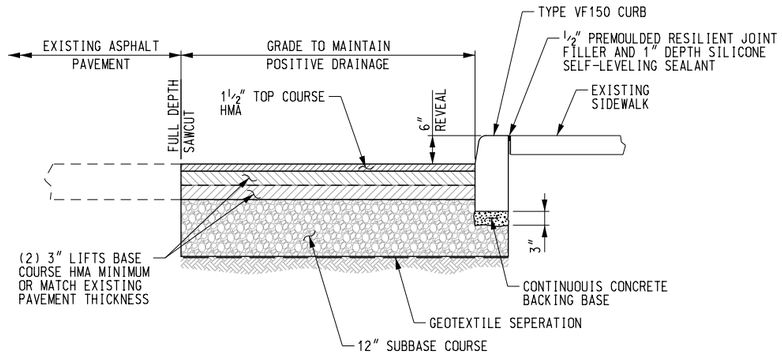

H CS-4 SECTION
SCALE: 3/8"=1'-0"

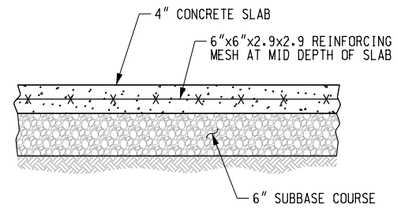

SIDEWALK DETAIL
SCALE: 3/4"=1'-0"

NOTES:

1. CURB AND SIDEWALK DETAILS THAT ARE DEPICTED HEREIN ARE INTENDED TO BE USED AS A GUIDE AND THEIR USE SHALL NOT ABSOLVE THE CONTRACTOR FROM THE RESPONSIBILITY OF PROVIDING WORK THAT MEETS THE REQUIREMENTS OF NYSDOT STANDARD SHEETS.
2. THE CONTRACTOR SHALL ENSURE POSITIVE DRAINAGE FLOW WHEN REPLACING/INSTALLING PAVEMENT.
3. UTILITY TRENCHES SHALL BE RECONSTRUCTED PER DETAILS NOTED HEREIN.

BUFFALO AND FORT ERIE PUBLIC BRIDGE AUTHORITY

PORT HARDENING PROGRAM 2020

GPI Engineering Design Planning Construction Management
716-633-4844 GPINET.COM

Greenman-Pedersen, Inc.
403 Main Street, Suite 330
Buffalo, NY 14203

CURB/SIDEWALK DETAILS (5 OF 5)

DESIGNED: T.P.C.	DRAWN: T.P.C.	CHECKED: T.L.
SCALE: AS NOTED	DRAWING CS-5	SHEET NO. 16 OF 23
DATE: JUNE 2020		

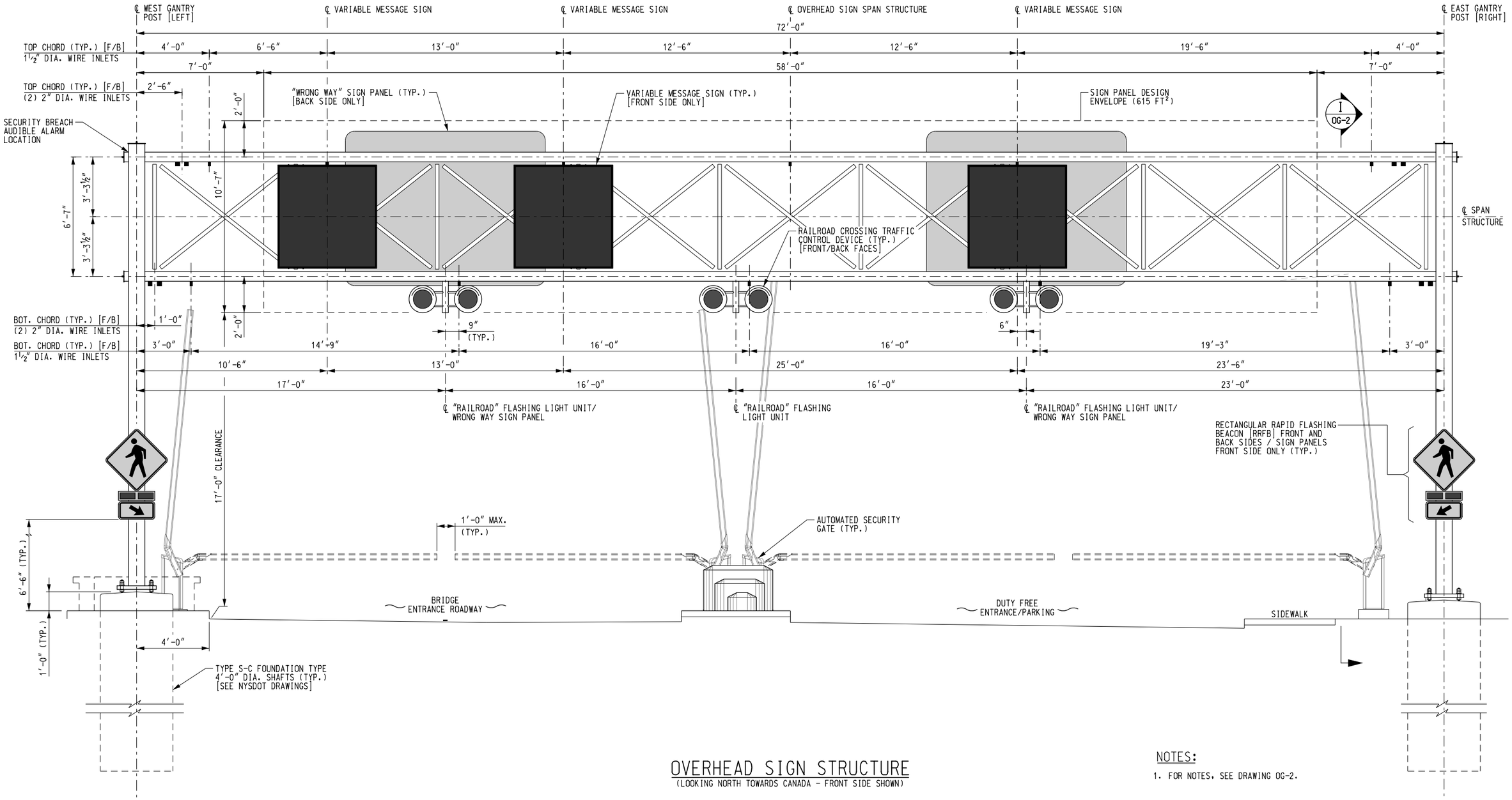

OVERHEAD SIGN STRUCTURE

(LOOKING NORTH TOWARDS CANADA - FRONT SIDE SHOWN)

NOTES:

1. FOR NOTES, SEE DRAWING OG-2.

SPAN STRUCTURE TABLE

S.I.N.	ITEM NO.	LOCATION	STRUCTURE TYPE (NOTE 12*)	TRUSS SPAN (ft)	TOTAL SIGN AREA (ft²)	NOMINAL POST HEIGHT (ft.) (NOTE 8*)	MIN. VCL (ft.)	POSTS												CONSTRUCTED FOUNDATION TYPE (SEE NOTE 13*)	
								LEFT						RIGHT							
								SUBSTRATE SOIL/ROCK (NOTE 10*)	BL (ft.)	XL (ft.)	OFF-SET (ft.)	OFF-SET CODE	FOUND. TYPE (NOTE 11*)	SUBSTRATE SOIL/ROCK (NOTE 10*)	BL (ft.)	XL (ft.)	OFF-SET (ft.)	OFF-SET CODE	FOUND. TYPE (NOTE 11*)	LEFT	RIGHT
N/A	N/A	DUTY FREE	S25-60-9	72′-0″	615	20′-9″	17′-0″	SOIL	17′-6″	T.B.D.	4′-0″	CF	SHAFT	SOIL	T.B.D.	T.B.D.	N/A	N/A	SHAFT		

*FOR NOTES, SEE NYSDOT DRAWING BD-OS1

BUFFALO AND FORT ERIE PUBLIC BRIDGE AUTHORITY

PORT HARDENING PROGRAM 2020

GPI Engineering Design Planning Construction Management
716-633-4844 GPINET.COM
Greenman-Pedersen, Inc.
403 Main Street, Suite 330
Buffalo, NY 14203

OVERHEAD SIGN STRUCTURE DETAILS (1 OF 3)

DESIGNED: T.P.C.	DRAWN: T.P.C.	CHECKED: T.L.
SCALE: 3/16"=1'-0"	DRAWING OG-1	SHEET NO. 17 OF 23
DATE: JUNE 2020		

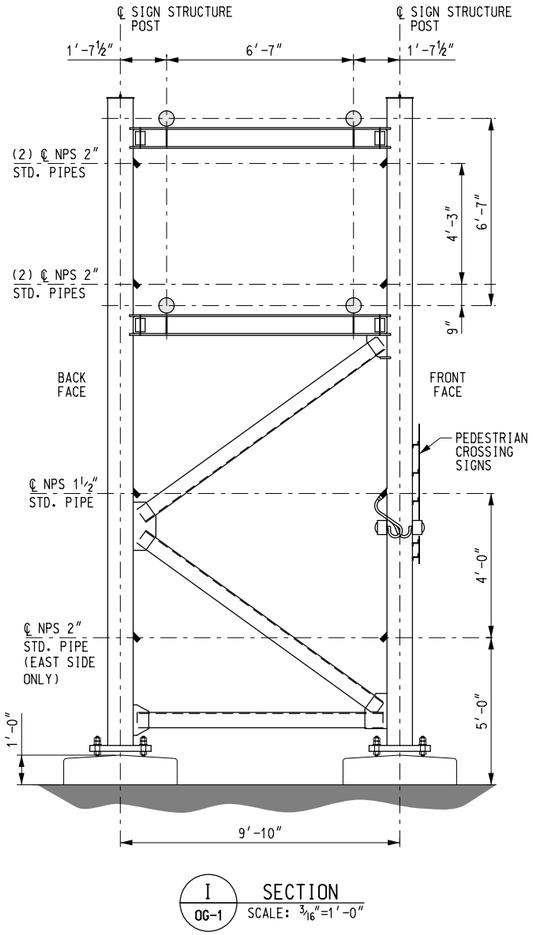

I / OG-1 SECTION
SCALE: 3/16″=1′-0″

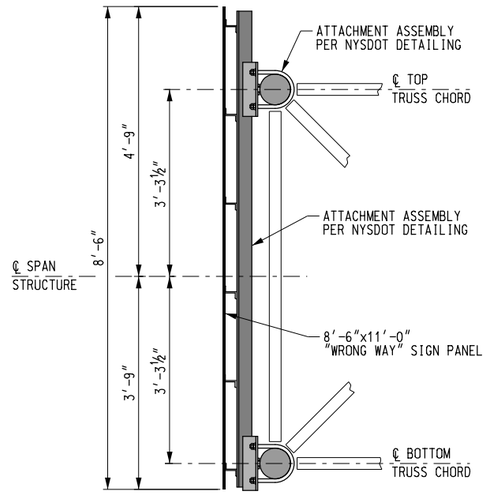

SIGN PANEL DETAILS
NOT TO SCALE

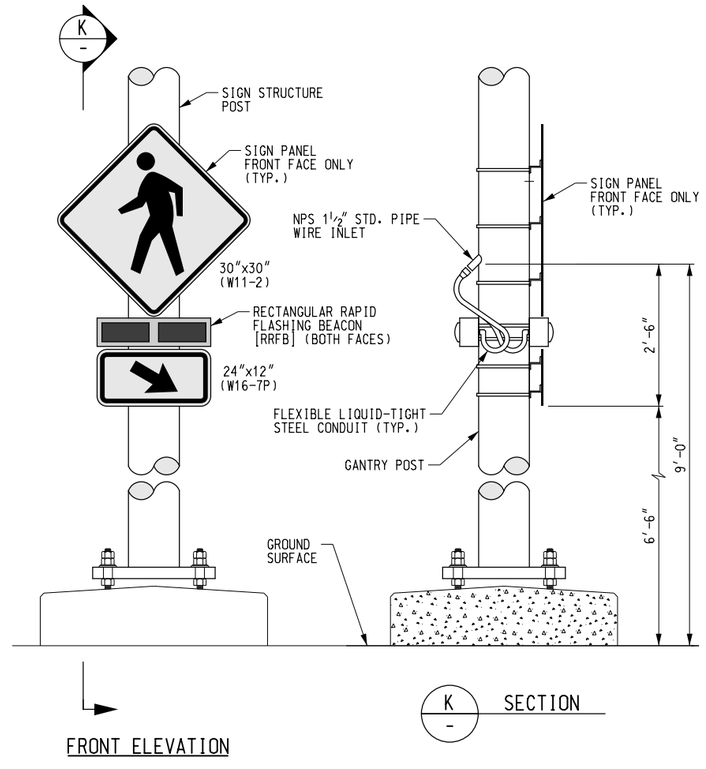

FRONT ELEVATION

K / - SECTION

PEDESTRIAN CROSSING SIGNS
NOT TO SCALE

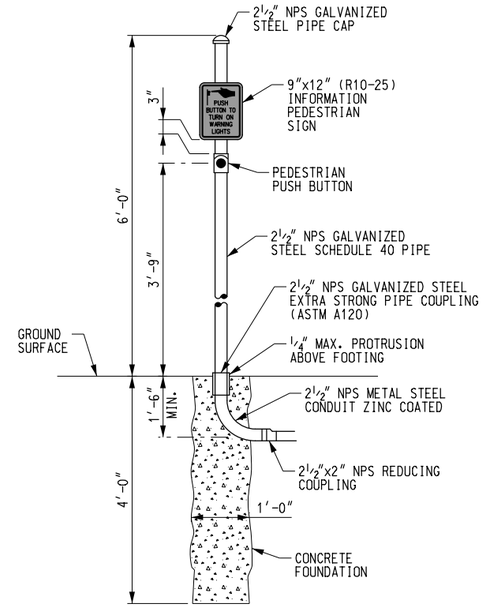

PEDESTRIAN PUSHBUTTON STATION
(NYSDOT STANDARD SHEET 680-10)
NOT TO SCALE

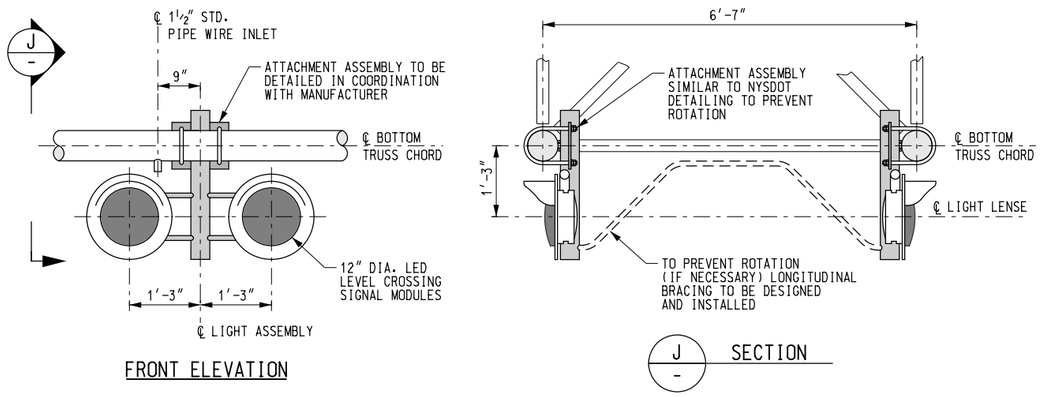

FRONT ELEVATION

J / - SECTION

"RAILROAD" FLASHING LIGHT UNIT
NOT TO SCALE (QTY: 6 ASSEMBLIES)

NOTES:

1. OVERHEAD SIGN STRUCTURE TO BE DETAILED AND DESIGNED PER NYSDOT (BD-OS DRAWINGS).
2. ALL WIRE INLETS SHOWN WITHIN THE SIGN STRUCTURE ELEVATION IN DRAWING OG-1 SHALL BE INSTALLED AT BOTH FRONT AND BACK (F/B) CHORDS.
3. VARIABLE MESSAGE SIGNS SHALL BE DAKTRONICS MODEL NUMBER VC6-80x80-19.8-RGB-SF.
4. FINAL LOCATIONS/DIMENSIONS OF VMS SUPPORT ANGLE CONNECTIONS TO BE CONFIRMED WITH SIGN MANUFACTURER PRIOR TO FABRICATION.
5. RECTANGULAR RAPID FLASHING BEACON [RRFB] LIGHTS SHALL BE INSTALLED ON BOTH SIDES OF BOTH FRONT FACE SIGN STRUCTURE POSTS. RRFB SHALL BE DESIGNED PER THE PROJECT SPECIFICATIONS.

"RAILROAD" FLASHING LIGHT NOTES:

1. FLASHING LIGHT ASSEMBLIES SHALL BE "ANSALDO STS USA HC-120B" OR EQUIVALENT. SYSTEM SHALL MEET OR EXCEED AREMA STANDARDS.
2. LIGHTS SHALL BE LIGHT-EMMITTING DIODE (LED), 12 INCH DIAMETER, AND DESIGNED TO PROVIDE PROTECTION AGAINST MOISTURE AND DUST.
3. ALL COMPONENTS SHALL CONSIST OF CORROSION RESISTANT METALS. LENSE HOODS AND BACKGROUNDS SHALL BE PAINTED BLACK.
4. CONTRACTOR SHALL DESIGN AND DETAIL ATTACHMENT BRACKETS AND/OR THREADED FITTINGS WHICH SHALL BE SUBMITTED FOR APPROVAL BY ENGINEER PRIOR TO FABRICATION.

BUFFALO AND FORT ERIE PUBLIC BRIDGE AUTHORITY

PORT HARDENING PROGRAM 2020

GPI Engineering Design Planning Construction Management
716-633-4844 GPINET.COM
Greenman-Pedersen, Inc.
403 Main Street, Suite 330
Buffalo, NY 14203

OVERHEAD SIGN STRUCTURE DETAILS (2 OF 3)

DESIGNED: T.P.C.	DRAWN: T.P.C.	CHECKED: T.L.
SCALE: AS NOTED	DRAWING OG-2	SHEET NO. 18 OF 23
DATE: JUNE 2020		

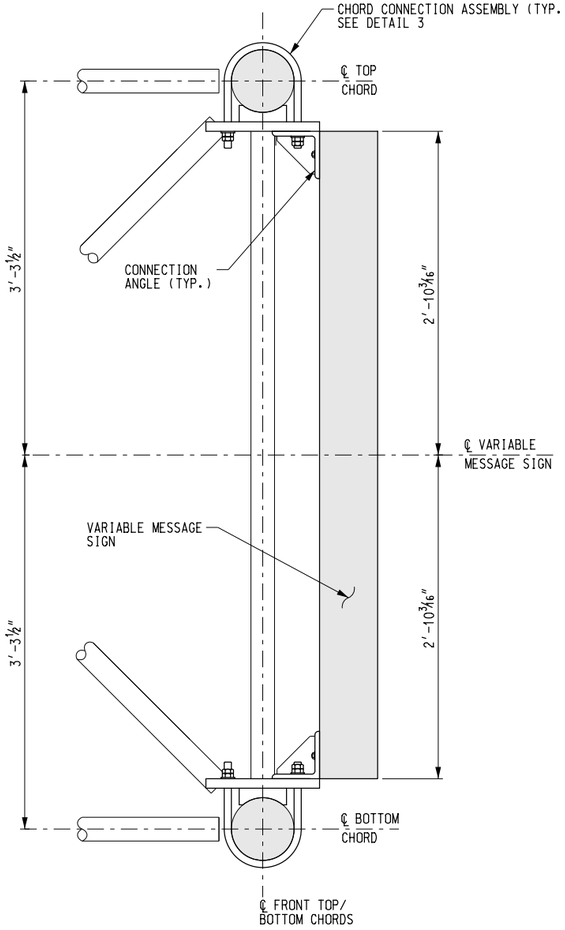

SIDE ELEVATION

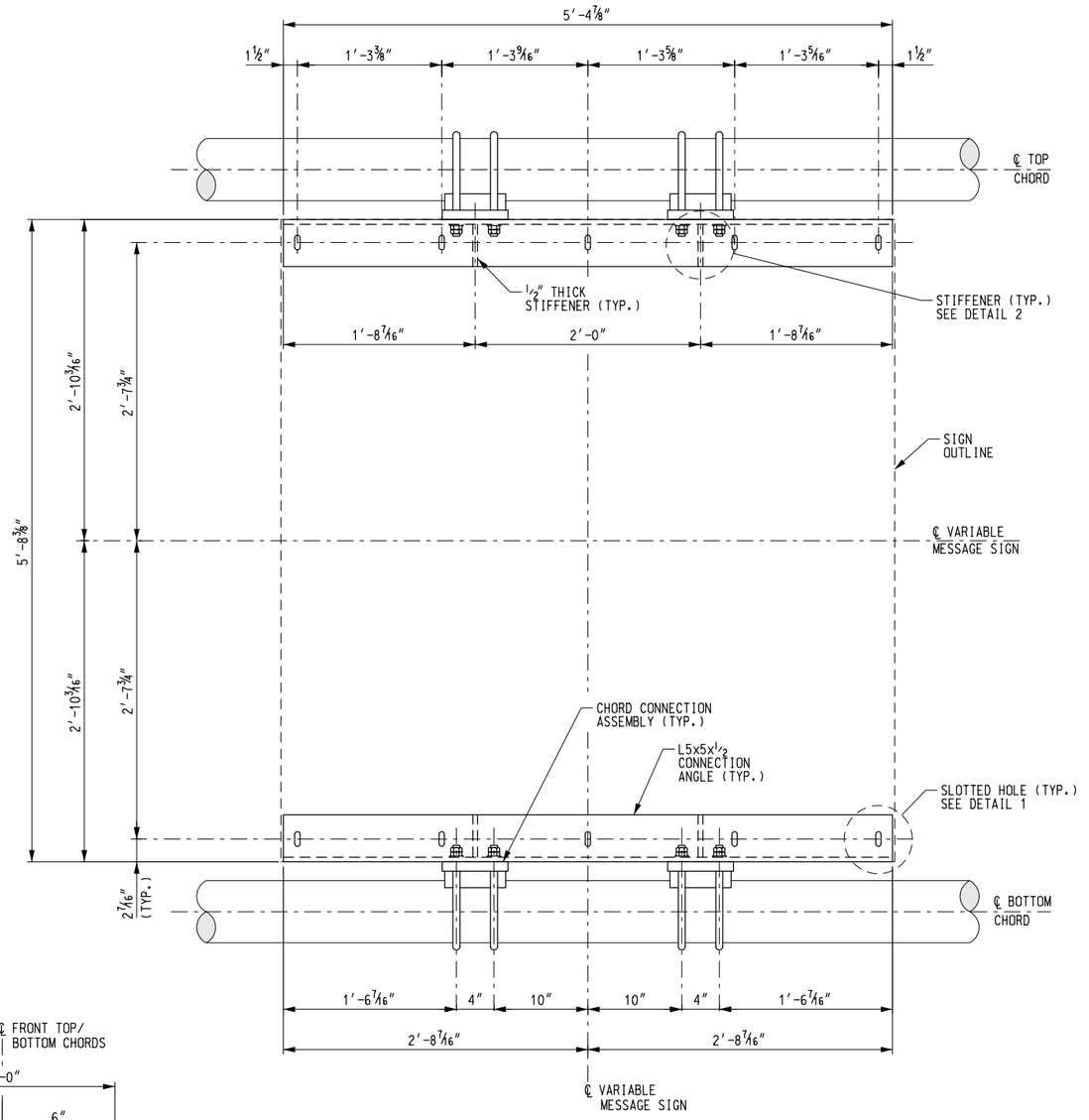

FRONT ELEVATION

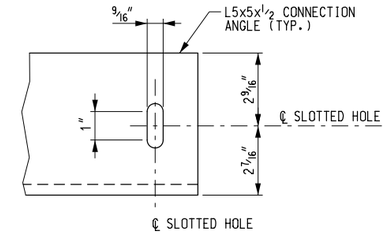

1 DETAIL

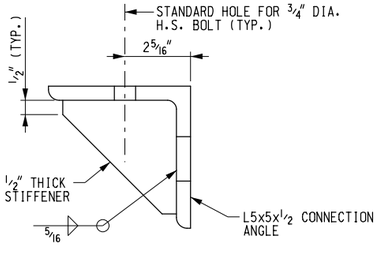

2 DETAIL

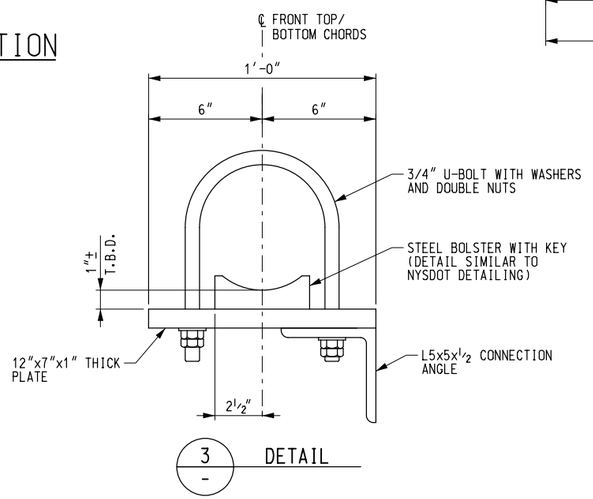

3 DETAIL

NOTES:

1. VARIABLE MESSAGE SIGNS SHALL BE DAKTRONICS MODEL NUMBER VC6-80x80-19.8-RGB-SF.
2. FINAL LOCATIONS/DIMENSIONS OF VMS SUPPORT ANGLE CONNECTIONS TO BE CONFIRMED WITH SIGN MANUFACTURER PRIOR TO FABRICATION. STEEL BOLSTER DEPTH TO BE SIZED APPROPRIATELY TO ACCOMMODATE SIGN DIMENSIONS.
3. ALL STEEL USED FOR SIGN ASSEMBLIES SHALL BE HOT-DIP GALVANIZED IN ACCORDANCE WITH ASTM A123.

BUFFALO AND FORT ERIE PUBLIC BRIDGE AUTHORITY

PORT HARDENING PROGRAM 2020

GPI Engineering Design Planning Construction Management
716-633-4844 GPINET.COM

Greenman-Pedersen, Inc.
403 Main Street, Suite 330
Buffalo, NY 14203

OVERHEAD SIGN STRUCTURE DETAILS (3 OF 3)

DESIGNED: T.P.C.	DRAWN: T.P.C.	CHECKED: T.L.
SCALE: ¾"=1'-0"	DRAWING OG-3	SHEET NO. 19 OF 23
DATE: JUNE 2020		

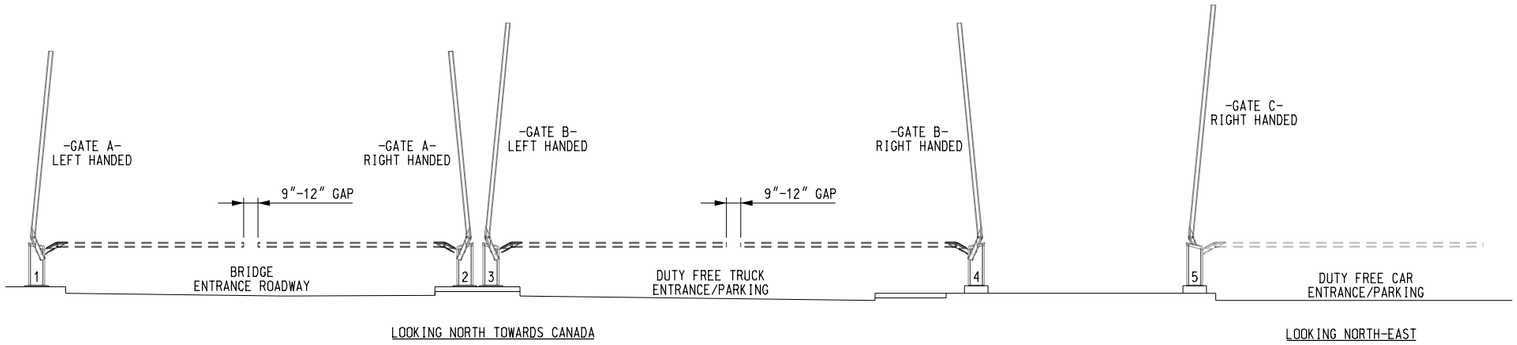

LOOKING NORTH TOWARDS CANADA

LOOKING NORTH-EAST

AUTOMATED SECURITY GATES

DF SUPPLY INC. - MAGNETIC AUTOCONTROL

GATE A QTY: 2
- MAGNETIC ACCESS PRO-L-RC01510 BARRIER OPENER WITH 15'-0" BOOM (DARK GRAY) PLUS AUTOCONTROL RED LED BOOM LIGHT STRIP
- BOOM TO BE TRIMMED TO APPROXIMATELY: 14'-3" (EQUAL LENGTHS)

GATE B QTY: 2
- MAGNETIC ACCESS PRO-L-RC02010 BARRIER OPENER WITH 20'-0" BOOM (DARK GRAY) PLUS AUTOCONTROL RED LED BOOM LIGHT STRIP
- BOOM TO BE TRIMMED TO APPROXIMATELY: 16'-4" (EQUAL LENGTHS)

GATE C QTY: 1
- MAGNETIC ACCESS PRO-L-RC02010 BARRIER OPENER WITH 20'-0" BOOM (DARK GRAY) PLUS AUTOCONTROL RED LED BOOM LIGHT STRIP

NOTES:

1. AUTOMATED SECURITY GATES SHALL BE INSTALLED PER THE MANUFACTURER.
2. FOUNDATIONS, REINFORCING MESH, AND CONDUITS SHALL BE CONSTRUCTED PER THE MANUFACTURER.
3. INDUCTION (SAFETY) LOOPS SHALL BE INSTALLED PER THE MANUFACTURER.

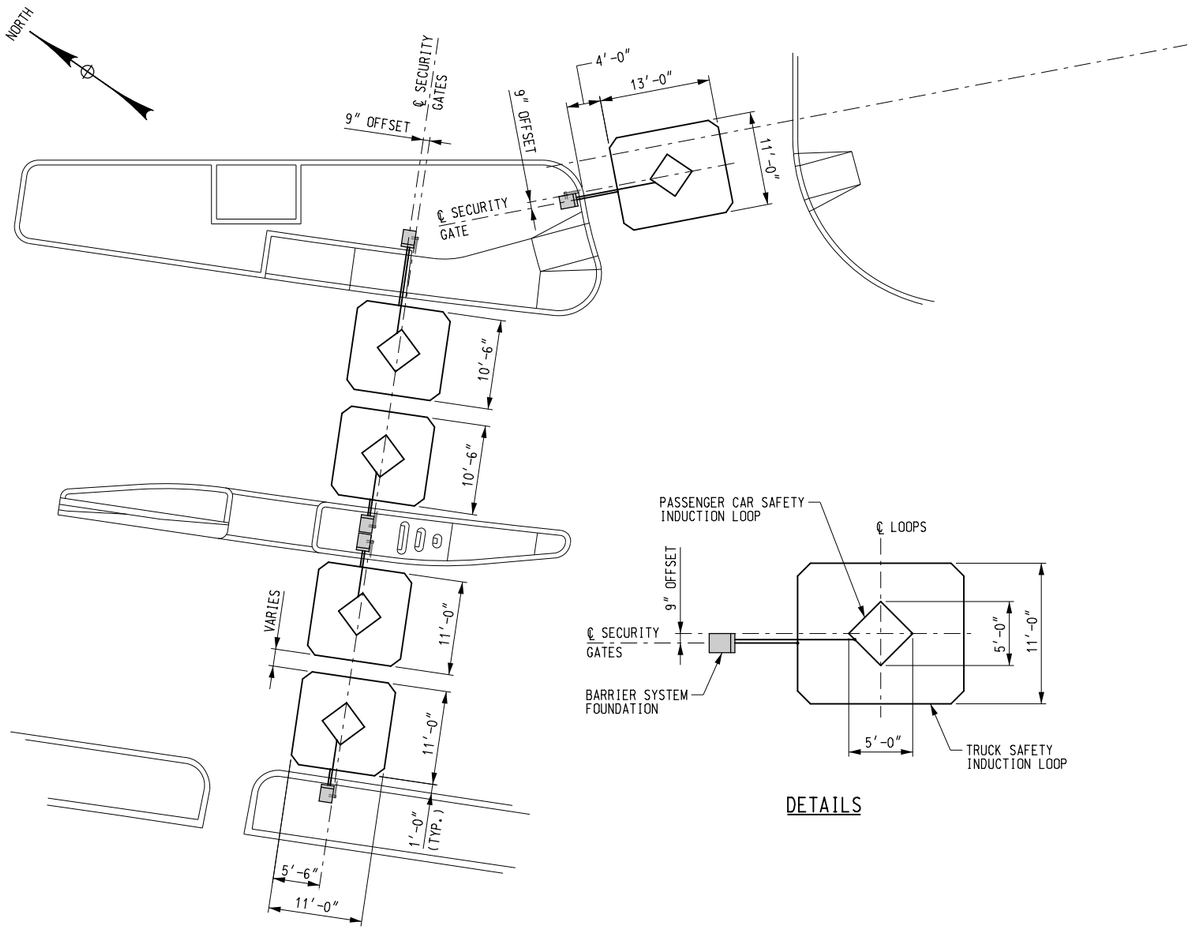

DETAILS

INDUCTION SAFETY LOOPS

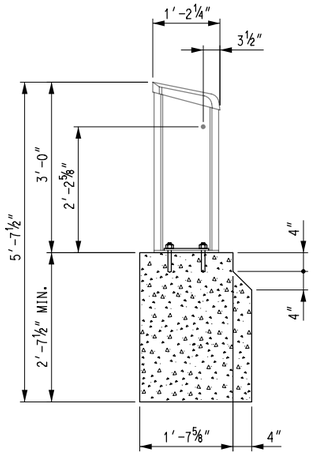

FRONT ELEVATION/SECTION

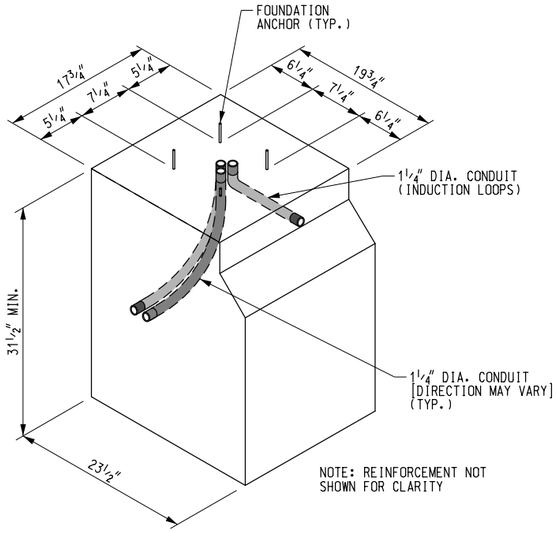

FOUNDATION ISOMETRIC

AUTOMATED SECURITY GATE DETAILS

BUFFALO AND FORT ERIE PUBLIC BRIDGE AUTHORITY

PORT HARDENING PROGRAM 2020

GPI Engineering Design Planning Construction Management
716-633-4844 GPINET.COM

Greenman-Pedersen, Inc.
403 Main Street, Suite 330
Buffalo, NY 14203

AUTOMATED SECURITY GATE DETAILS

DESIGNED: T.P.C.	DRAWN: T.P.C.	CHECKED: T.L.
SCALE: N.T.S.	DRAWING AG-1	SHEET NO. 20 OF 23
DATE: JUNE 2020		

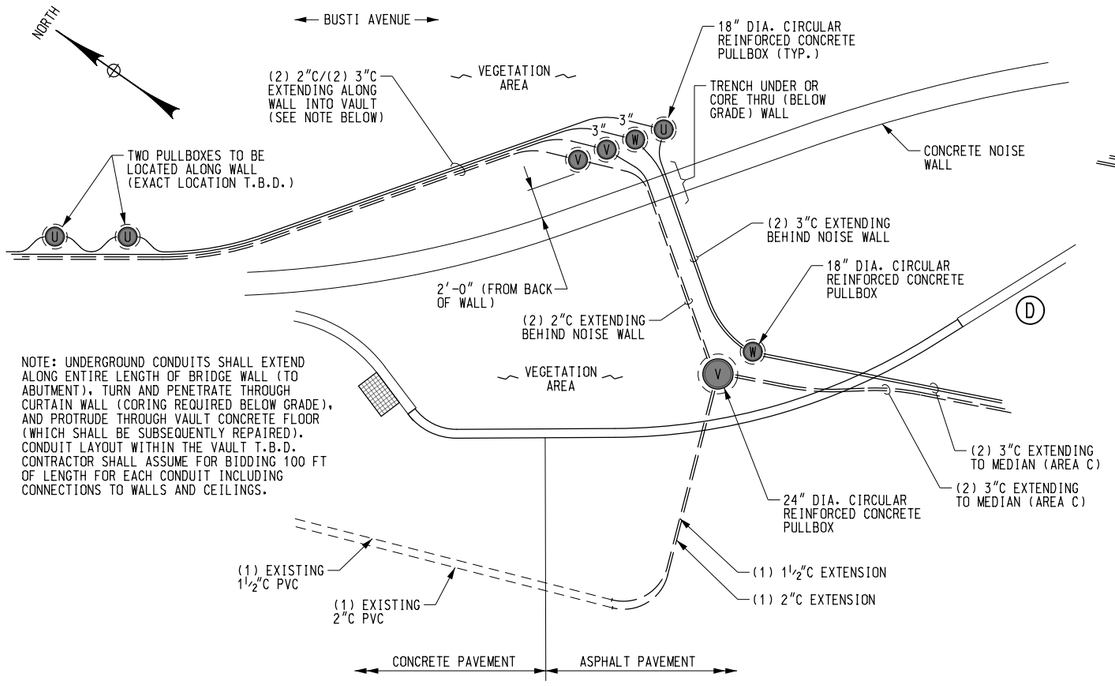

UTILITY PLAN

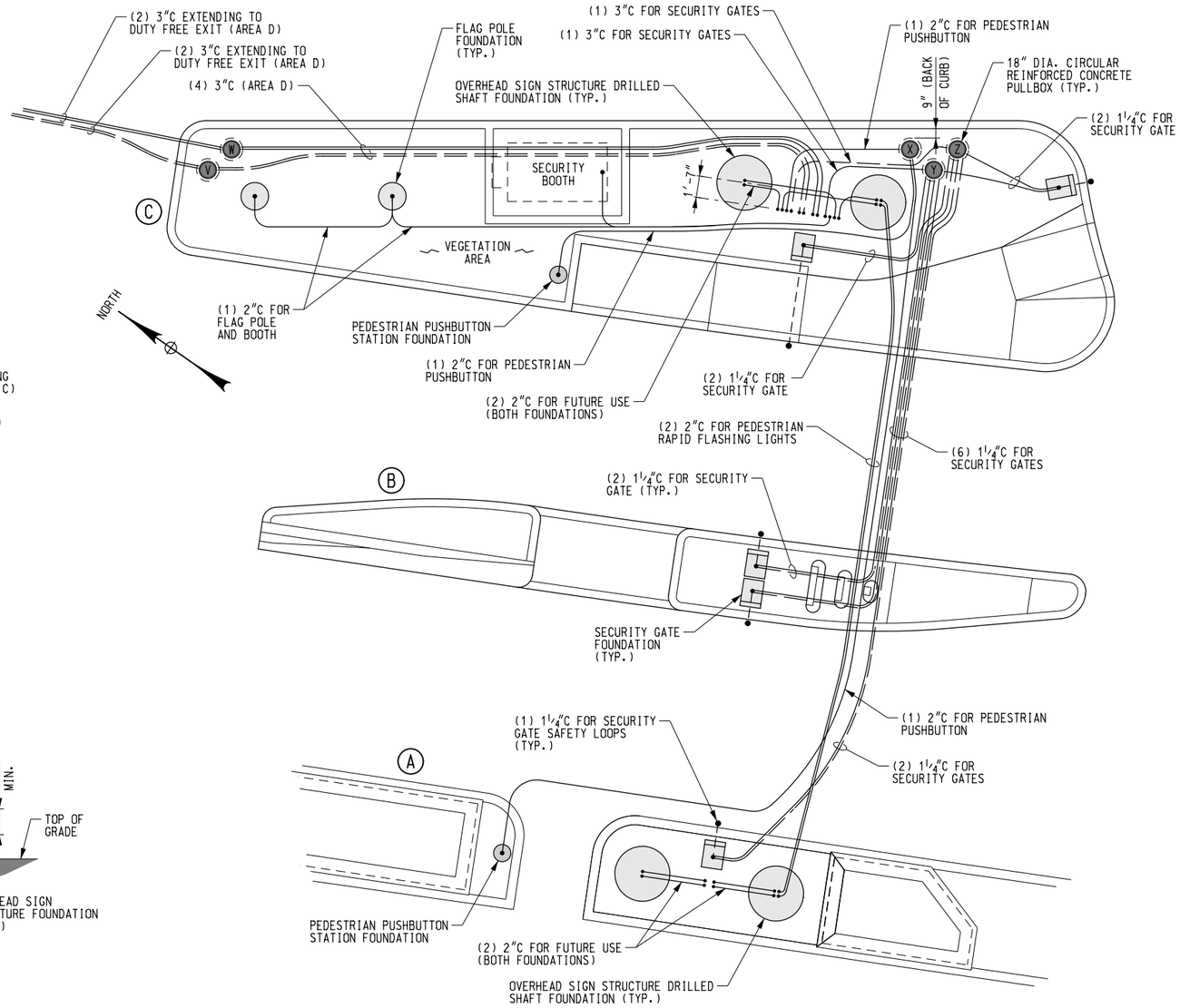

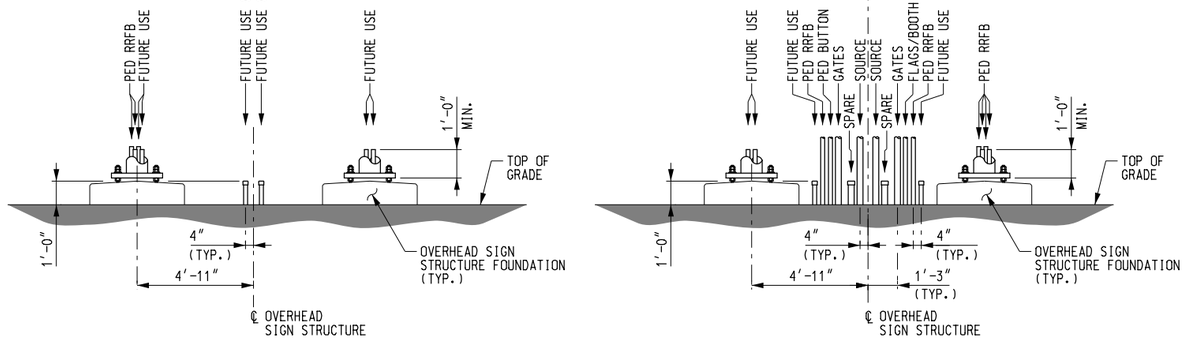

WEST POSTS
FACING WEST

EAST POSTS
FACING EAST

GANTRY CONDUITS
ELEVATION VIEW

PULLBOX COVER IDENTIFICATION

PULLBOX =	U	V V	W	X	Y	Z
TEXT =	LIGHT POWER	COMM/ DATA	GANTRY POWER	PED PUSH BUTTON	GATE POWER	GATE COMM/ DATA

NOTE: PULLBOX COVERS SHALL BE CAST WITH IDENTIFICATION TEXT

NOTES:

1. ALL CONDUITS SHALL BE RIGID PVC (POLYVINYL CHLORIDE) AND INSTALLATIONS SHALL HAVE A MINIMUM COVER OF 30 INCHES. ALL UNDERGROUND CONDUITS SHALL BE ENCASED IN CONCRETE (MIN. 3" SURROUNDING THICKNESS), REST ON UNDISTURBED EARTH (OR ADEQUATELY COMPACTED SUBBASE) AND INCLUDE EMBEDDED RED MAGNETIC MARKING TAPE (15" BELOW TOP OF FINISHED GRADE).
2. ALL CONDUITS PROTRUDING FROM THE GROUND FOR FUTURE USE SHALL BE CAPPED.
3. ALL 3" DIAMETER CONDUITS SHALL BE PROVIDED WITH (3) 1¼" DIAMETER INNER DUCTS WITH PULL STRINGS. PULL STRINGS SHALL BE PROVIDED WITHIN ALL CONDUITS AND INNER DUCTS.
4. CONTRACTOR SHALL BE AWARE THAT THERE MAY BE OTHER UTILITIES IN THE VICINITY OF PROPOSED WORK THAT ARE NOT DEPICTED HEREIN. IT SHALL BE THE CONTRACTOR'S RESPONSIBILITY TO DO A COMPREHENSIVE UNDERGROUND SURVEY USING A PRIVATE UTILITY LOCATOR AND IDENTIFY POTENTIAL INTERFERENCES PRIOR TO ANY EXCAVATION WORK.
5. PULLBOXES SHALL BE PER NYSDOT STANDARD SHEETS 680-03 AND 680-04. TOP OF PULLBOX COVERS SHALL BE FLUSH WITH TOP OF ADJACENT CURB (EXCLUDING PULLBOXES OUTSIDE OF CONCRETE NOISE WALL WHICH SHALL BE 6" ABOVE GRADE). THE NUMBER OF KNOCKOUTS MAY NEED TO BE REVISED TO ACCOMMODATE SPECIFIED CONDUITS.
6. MINIMUM RADIUS FOR ALL CONDUIT FITTINGS SHALL BE 12" EXCEPT FOR SECURITY GATE SAFETY LOOPS.
7. FOR POWER AND COMMUNICATION WIRING, SEE DRAWING U-2.

UTILITY PLAN

BUFFALO AND FORT ERIE
PUBLIC BRIDGE AUTHORITY

PORT HARDENING PROGRAM 2020

GPI Engineering Design Planning Construction Management
716-633-4844 GPINET.COM

Greenman-Pedersen, Inc.
403 Main Street, Suite 330
Buffalo, NY 14203

UNDERGROUND UTILITY CONDUIT PLAN

DESIGNED: T.P.C.	DRAWN: T.P.C.	CHECKED: T.L.
SCALE: N.T.S.	DRAWING U-1	SHEET NO. 21 OF 23
DATE: JUNE 2020		

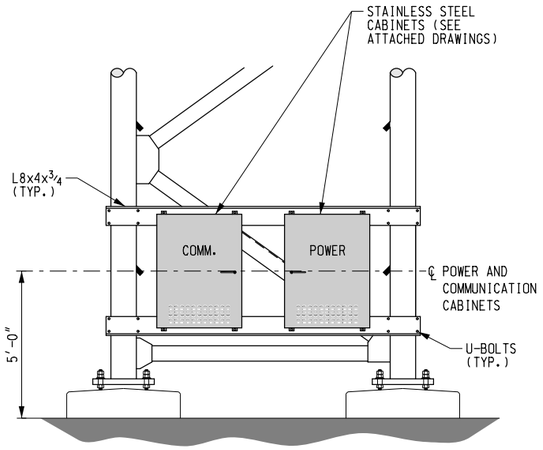

CABINET ATTACHMENT

WIRING REQUIRED

A. POWER SOURCE [(2)#2/0,(1)#4G]: LENGTH TO EXTEND FROM 100 FT WITHIN VAULTS (ASSUMED), ALONG BRIDGE WALL, THROUGH PULLBOX TO "AREA D", CONTINUING TO OSS POWER CABINET.
B. GATES POWER [(2)#10,(1)#10G]: FIVE (5) SETS OF WIRES EXTENDING FROM OSS POWER CABINET TO EACH SECURITY GATE.
C. SECURITY BOOTH [(2)#6,(1)#6G]: LENGTH FROM OSS POWER CABINET TO SECURITY BOOTH SUB-PANEL (SHARE CONDUIT WITH FLAG POLES).
D. FLAG POLES POWER [(2)#12,(1)#12G]: DAISY CHAIN LENGTH FROM OSS POWER CABINET TO FLAG POLES (SHARE CONDUIT WITH SECURITY BOOTH).
E. PED RRFB POWER [(2)#12,(1)#12G]: LENGTH TO EXTEND FROM OSS POWER CABINET THROUGH OSS FOUNDATION, THEN DAISY CHAIN TO PEDESTRIAN RRFB LIGHTS USING OSS POSTS AND UNDERGROUND CONDUIT.
F. VMS POWER [(2)#12,(1)#12G]: THREE (3) SETS OF WIRES FROM OSS POWER CABINET, INTO OSS POST WIRE INLET, THROUGH STRUCTURE TO EACH SIGN.
G. RAILROAD LIGHTS POWER [(2)#12,(1)#12G]: LENGTH TO EXTEND FROM OSS POWER CABINET, INTO OSS POST WIRE INLET, THROUGH STRUCTURE, DAISY CHAINED TO EACH SET OF LIGHTS.

A. DATA SOURCE [(1) 48-FIBER, 9 um, SINGLE MODE]: LENGTH TO EXTEND FROM INSIDE VAULT SPANS THROUGH EXISTING 1½" CONDUIT TO "AREA D", THEN EXTEND TO OSS COMMUNICATION CABINET.
B. GATES DATA [6/C#18 AWG SHIELDED]: FIVE (5) WIRES EXTENDING FROM OSS COMMUNICATION CABINET TO EACH SECURITY GATE.
C. PED BUTTON DATA [TO BE DETERMINED BY CONTRACTOR]: WIRING TO EXTEND BETWEEN BOTH PEDESTRIAN PUSHBUTTONS AND THE OSS COMMUNICATION CABINET.
D. PED RRFB DATA [TO BE DETERMINED BY CONTRACTOR IF REQUIRED]: LENGTH TO EXTEND FROM OSS COMMUNICATION CABINET THROUGH OSS FOUNDATION, THEN DAISY CHAIN TO PEDESTRIAN RRFB LIGHTS USING OSS POSTS AND UNDERGROUND CONDUIT. (DESIGN LAYOUT TO BE VERIFIED BY CONTRACTOR).
E. VMS DATA [6-FIBER, 50/125 uM, MULTI-MODE]: CABLE TO EXTEND FROM OSS COMMUNICATION CABINET THROUGH OSS POSTS AND STRUCTURE, DAISY CHAIN BETWEEN SIGNS (AS SHOWN), AND RETURN TO OSS COMMUNICATION CABINET.

A. VARIOUS WIRING BETWEEN POWER AND COMMUNICATION CABINETS AS SHOWN WITHIN DETAILS.

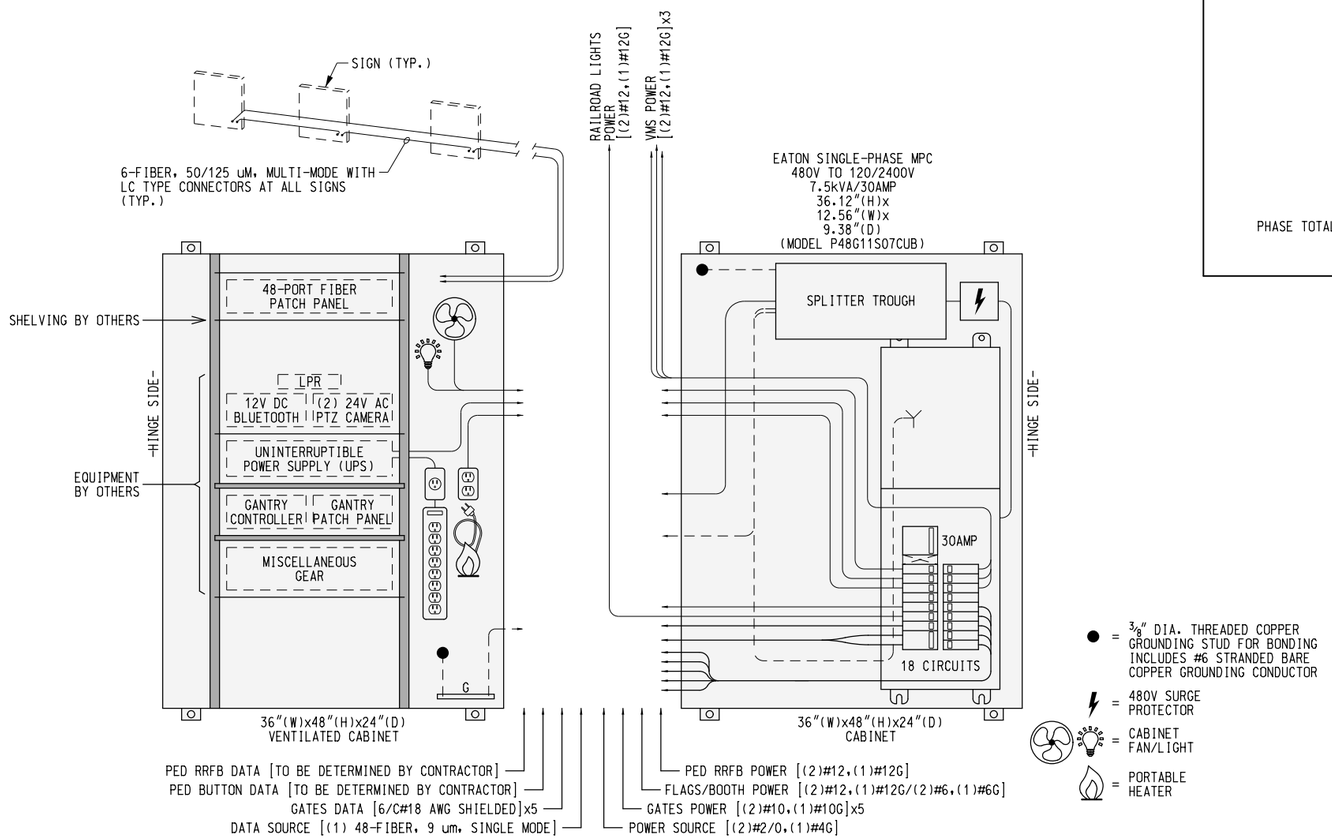

ELECTRIC/COMMUNICATION CABINET LAYOUTS

FACING EAST

DUTY FREE OVERHEAD SIGN STRUCTURE

PANEL: MPC-DF | VOLTAGE: 240/120V | MAINS: 30A
LOCATION: OUTDOOR | PHASE: 1 | BUS: 100A
POWER FED FROM: US VAULT | WIRES: 2 | INTERRUPTING RATING: 18 kA

LOAD DESCRIPTION	LOAD IN PHASES (VA) B	LOAD IN PHASES (VA) C	CIRCUIT TRIP AMPS	CIRCUIT NO.	LOAD IN PHASES (VA) B C	CIRCUIT NO.	CIRCUIT TRIP AMPS	LOAD IN PHASES (VA) B	LOAD IN PHASES (VA) C	LOAD DESCRIPTION
CABINET FAN/LIGHT	180		20	1		2	20	1,035		SIGN U1
UPS (POWER STRIP #1)		1,500	20	3		4	20		1,035	SIGN U2
RECEPTACLE	600		20	5		6	20	1,035		SIGN U3
SPARE				7		8				SPARE
PED CROSSING LIGHTS	TBD		20	9		10	20	TBD		SECURITY GATE #1
RAILROAD WARNING LIGHTS		TBD	20	11		12	20		TBD	SECURITY GATE #2
FLAG POLES	TBD		20	13		14	20	TBD		SECURITY GATE #3
SECURITY BOOTH (SUB-PANEL)		5000	50	15		16	20		TBD	SECURITY GATE #4
	5000			17		18	20	TBD		SECURITY GATE #5

LOADS SHOWN WITHIN PANEL SCHEDULE ARE TENTATIVE ONLY. CONTRACTOR SHALL UPDATE SCHEDULE BASED ON ACTUAL EQUIPMENT INSTALLED. FINAL LOADS SHALL BE BALANCED TO THE GREATEST EXTENT POSSIBLE BETWEEN TWO OF THE 3-PHASES.

	PHASE-A	PHASE-B	PHASE-C
PHASE TOTAL:	-	TBD	TBD

PANEL TOTAL: TBD

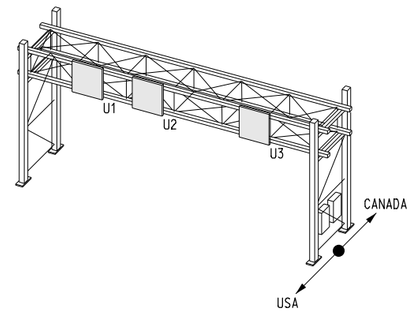

PANEL SCHEDULE

NOTES:

1. THE CONTRACTOR SHALL FINALIZE/DETAIL CONDUIT LAYOUT AT THE OVERHEAD SIGN STRUCTURE FOR APPROVAL BY THE ENGINEER.
2. ALL WIRING BETWEEN OSS WIRE INLETS AND COMPONENTS SHALL BE SECURED AND SEALED WITHIN FLEXIBLE LIQUID-TIGHT STEEL CONDUITS.
3. THE CONTRACTOR SHALL SUPPLY AND INSTALL ALL EQUIPMENT (WITH NOTED EXCEPTIONS) SHOWN WITHIN POWER AND COMMUNICATION CABINETS INCLUDING RAILS/RACKS AND FIBER PATCH PANEL.
4. CONNECTIONS OF WIRING (POWER AND DATA) SHALL BE MADE AT ALL EQUIPMENT MOUNTED ON THE OVERHEAD SIGN STRUCTURE, THE SECURITY GATES AND PEDESTRIAN PUSHBUTTONS, SECURITY BOOTH, FLAG POLES, AS WELL AS WITHIN THE POWER AND COMMUNICATION CABINETS.

BUFFALO AND FORT ERIE PUBLIC BRIDGE AUTHORITY

PORT HARDENING PROGRAM 2020

GPI Engineering Design Planning Construction Management
716-633-4844 GPINET.COM
Greenman-Pedersen, Inc.
403 Main Street, Suite 330
Buffalo, NY 14203

UTLITY WIRING AND ELECTRIC/ COMMUNICATION CABINETS

DESIGNED: T.P.C.	DRAWN: T.P.C.	CHECKED: T.L.
SCALE: N.T.S.	DRAWING U-2	SHEET NO. 22 OF 23
DATE: JUNE 2020		

SUPPLEMENTAL WORK

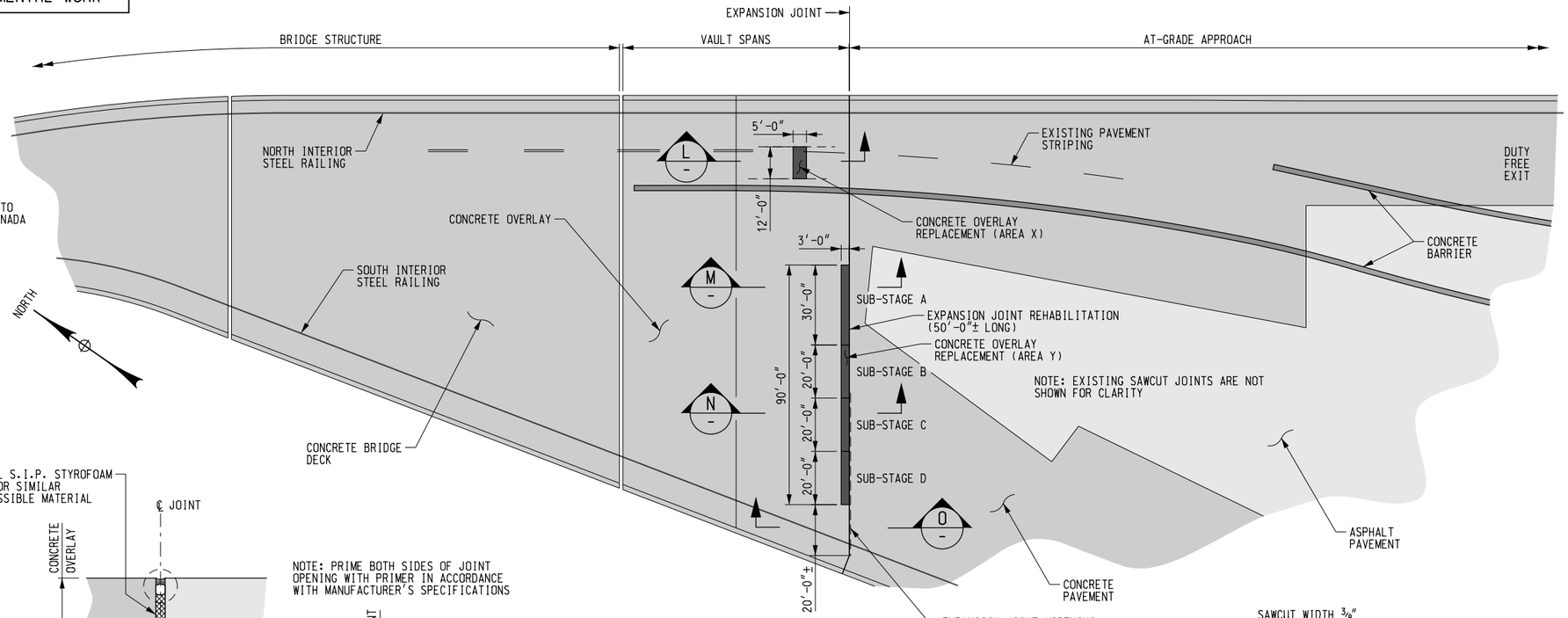

CONCRETE OVERLAY REPAIR PLAN

SCALE: 1"=50'-0"

WORK TO BE COMPLETED IN AREA X:

WORK ZONE TRAFFIC CONTROL SETUP

1. WORK ZONE TRAFFIC CONTROL SHALL BE DESIGNED BY THE CONTRACTOR. THE LAYOUT SHALL BE SIMPLISTIC BUT SAFE FOR THE TRAVELING PUBLIC AND CONSTRUCTION WORKERS. MINIMUM TRAVEL LANE WIDTH: 11'-0"

OVERLAY REPLACEMENT

1. REMOVE EXISTING CONCRETE OVERLAY BY SAWCUTTING. SAWCUTS SHALL NOT EXCEED 4" DEPTH AND SHALL BE BEVELLED. THE CONTRACTOR SHALL BE CAREFUL NOT TO SAWCUT INTO THE STRUCTURAL SLAB BELOW.
2. THE STRUCTURAL SLAB SHALL BE MILLED AT LOCATIONS WHERE THE OVERLAY THICKNESS FALLS BELOW 5 INCHES.
3. INSTALL A 6"x6" GALVANIZED STEEL MESH WITHIN ENTIRE NEW OVERLAY, 2" ABOVE TOP OF STRUCTURAL SLAB USING GALVANIZED CHAIRS.
4. NYSDOT CLASS DP CONCRETE SHALL BE PLACED AND HAVE A BROOM FINISH.

WORK TO BE COMPLETED IN AREA Y:

WORK ZONE TRAFFIC CONTROL SETUP

1. DUE TO THE SLOW SPEEDS OF APPROACHING VEHICLES, THE CONTRACTOR SHALL SIMPLY USE CHANNELIZING DEVICES TO DIVERT TRAFFIC. ALL WORK SHALL BE PERFORMED IN SEQUENTIAL (NOT CONCURRENT) SUB-STAGES AS SHOWN TO MINIMIZE TRAFFIC INTERRUPTIONS.

OVERLAY REPLACEMENT AND JOINT REHABILITATION

1. REMOVE EXISTING CONCRETE OVERLAY BY SAWCUTTING. SAWCUT SHALL NOT EXCEED 4" DEPTH AND SHALL BE BEVELLED. THE CONTRACTOR SHALL BE CAREFUL NOT TO SAWCUT INTO THE STRUCTURAL SLAB BELOW.
2. THE STRUCTURAL SLAB SHALL BE MILLED AT LOCATIONS WHERE THE OVERLAY THICKNESS FALLS BELOW 5 INCHES.
3. THE EXISTING JOINT SHALL BE CLEANED ENTIRELY (FULL-DEPTH). WHERE APPLICABLE, THE EXISTING JOINT SHALL BE WIDENED BY SAWCUTTING THE STRUCTURAL SLAB.
4. INSTALL JOINT SYSTEM AS SHOWN AT TOP OF STRUCTURAL SLAB.
5. INSTALL A 6"x6" GALVANIZED STEEL MESH WITHIN ENTIRE NEW OVERLAY, 2" ABOVE TOP OF STRUCTURAL SLAB USING GALVANIZED CHAIRS.
6. NYSDOT CLASS DP CONCRETE SHALL BE PLACED AND HAVE A BROOM FINISH.
7. SAWCUT CRACK CONTROL GROOVES TO BE ALIGNED WITH ADJACENT PANELS.
8. INSTALL JOINT SYSTEM AS SHOWN AT TOP OF CONCRETE OVERLAY.

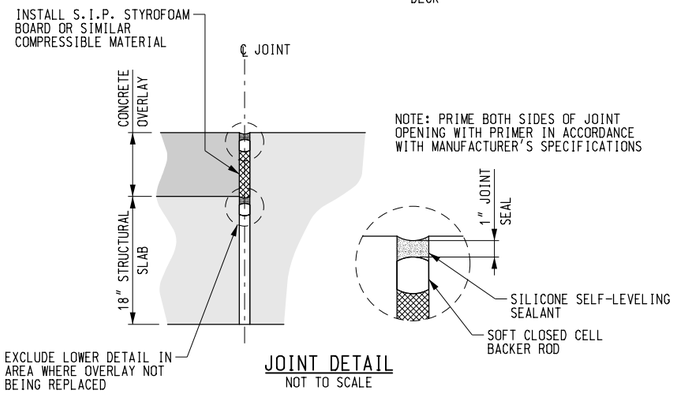

JOINT DETAIL

NOT TO SCALE

CRACK CONTROL SAWCUT DETAIL

NOT TO SCALE

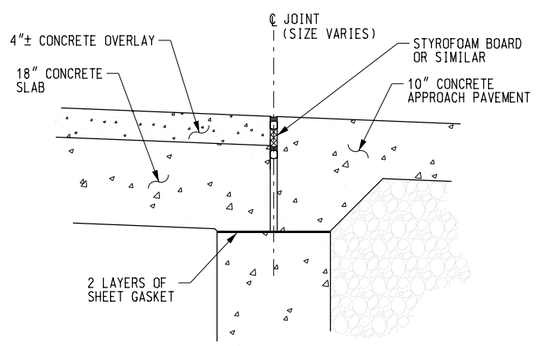

EXISTING

NOT TO SCALE

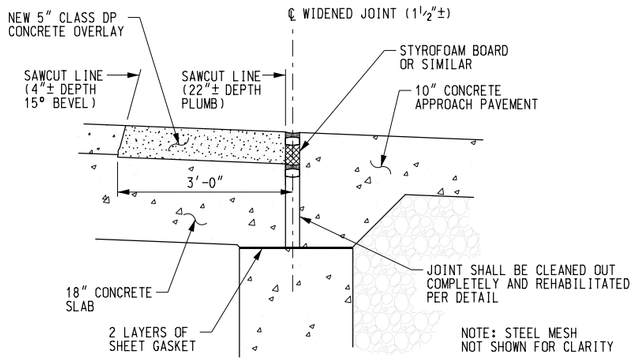

PROPOSED

NOT TO SCALE

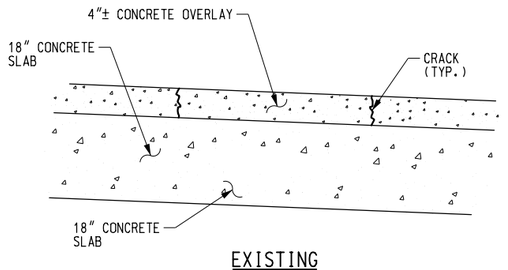

EXISTING

NOT TO SCALE

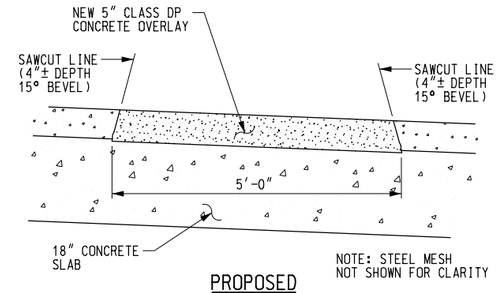

PROPOSED

NOT TO SCALE

N - SECTION

M - SECTION — SIMILAR TO "SECTION N" EXCLUDING JOINT WIDENING - EXISTING JOINT SHALL BE CLEANED OUT COMPLETELY AND REHABILITATED PER DETAIL

O - SECTION — SIMILAR TO "SECTION N" EXCLUDING OVERLAY REPLACEMENT - JOINT TO BE WIDENED, CLEANED OUT COMPLETELY AND REHABILITATED PER DETAIL

L - SECTION

NOTES:

1. THE AUTHORITY MAY CHOOSE NOT TO PERFORM THE WORK DETAILED WITHIN THIS DRAWING. CONVERSELY, THE AUTHORITY MAY REQUEST THAT THE CONTRACTOR PERFORM SIMILAR WORK AT ADDITIONAL LOCATIONS. THE PROJECT BID FORM HAS BEEN DEVELOPED TO FACILITATE THIS VARIABILITY.

BUFFALO AND FORT ERIE PUBLIC BRIDGE AUTHORITY

PORT HARDENING PROGRAM 2020

GPI Engineering Design Planning Construction Management
716-633-4844 GPINET.COM
Greenman-Pedersen, Inc.
403 Main Street, Suite 330
Buffalo, NY 14203

CONCRETE OVERLAY REPAIR

DESIGNED: T.P.C.	DRAWN: T.P.C.	CHECKED: T.L.
SCALE: 1"=50'-0"	DRAWING CR-1	SHEET NO. 23 OF 23
DATE: JUNE 2020		

NYSDOT OVERHEAD SIGN STRUCTURE
STANDARD SHEETS
(BD SHEETS)

SPAN STRUCTURE TABLE

S.I.N.	ITEM NO.	LOC. NO.	STRUCTURE TYPE (NOTE 12)	TRUSS SPAN (ft.)	TOTAL SIGN AREA (ft.)^2	NOMINAL POST HEIGHT (ft.) (NOTE 8)	MIN. VCL (ft.) (NOTE 9)	POSTS LEFT: SUBSTRATE SOIL/ROCK (NOTE 10)	BL (ft.)	XL (ft.)	OFF-SET (ft.)	OFF-SET CODE	FOUND. TYPE (NOTE 11)	POSTS RIGHT: SUBSTRATE SOIL/ROCK (NOTE 10)	BR (ft.)	XR (ft.)	OFF-SET (ft.)	OFF-SET CODE	FOUND. TYPE (NOTE 11)	SIGNS SIGN 1: TEXT NO.	MIN NO. Z BARS (NOTE 4) (TYP.)	G (ft.)	US OR DS (NOTE 7) (TYP.)	SIGN 2: TEXT NO.	MIN NO. Z BARS	H (ft.)	US OR DS	SIGN 3: TEXT NO.	MIN NO. Z BARS	I (ft.)	US OR DS	SIGN 4: TEXT NO.	MIN NO. Z BARS	J (ft.)	US OR DS	SIGN 5: TEXT NO.	MIN NO. Z BARS	K (ft.)	US OR DS	CONSTRUCTED FOUNDATION TYPE (SEE NOTE 13) LEFT	RIGHT
SAMPLE DATA																																												
N1246	644.434060	25	S40-60-11	121′-4"	509.1	33′-7¼"	17′-4"	S	29′-6"	6′-3"	29′-6"	EP	SHAFT	R (13′-6"/ 9′-11")	28′-3"	5′-0"	6′-6"	CF	SHAFT	46	3	37′-1"	DS	12	4	70′-0"	US															SHAFT	SHAFT

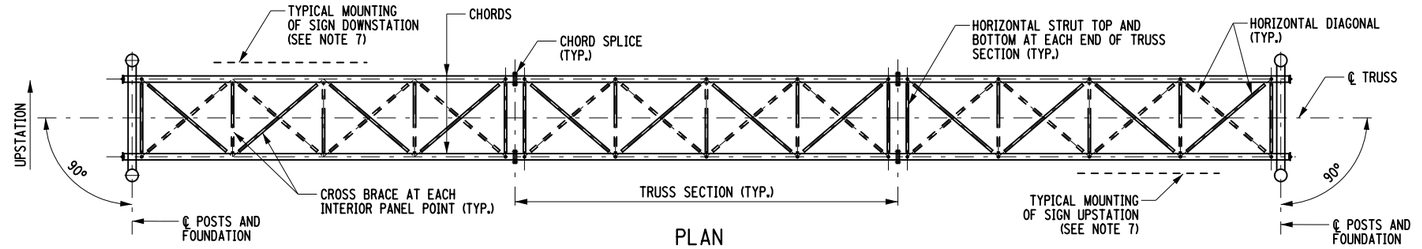

PLAN

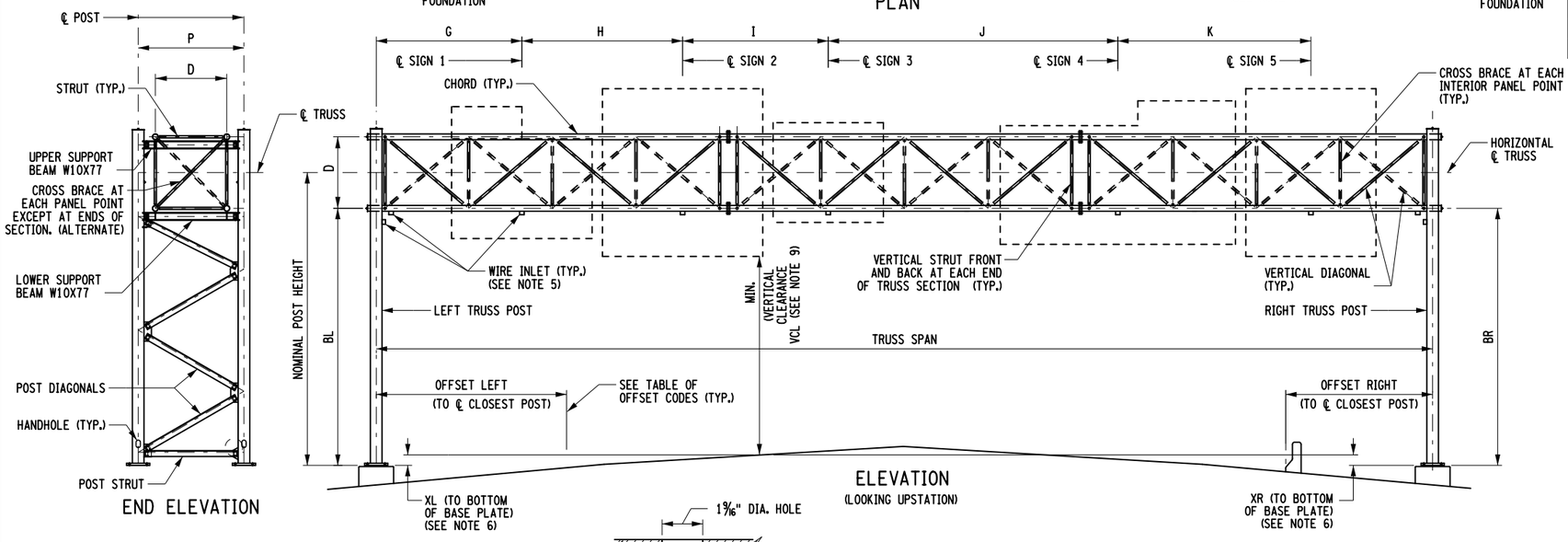

END ELEVATION

ELEVATION
(LOOKING UPSTATION)

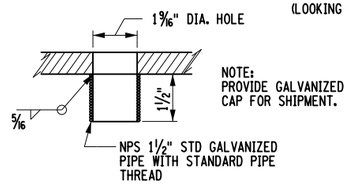

CHORD WIRE INLET DETAIL

OFFSET CODES			
EP	EDGE OF PAVEMENT	FB	TRAFFIC FACE OF BARRIER BASE
ES	EDGE OF SHOULDER	FG	FRONT FACE OF GUIDE RAIL
CF	CURB FACE	CL	HIGHWAY CENTER LINE

SPAN STRUCTURE TABLE (CONT'D)

S.I.N.	REMARKS :
	NOTE: USE THIS SPACE TO INDICATE 1. SPECIAL STRUCTURE DESIGN (FOR EXAMPLE: SPECIAL DESIGN - SIGN AREA) 2. NO OPTION ALLOWED AT FOUNDATION (FOR EXAMPLE: NO FOUNDATION OPTION AT RIGHT) 3. SPECIAL FOUNDATION DRAWING REQUIREMENTS

NOTES:

1. THESE STRUCTURES ARE DESIGNED IN ACCORDANCE WITH NYSDOT STANDARD DESIGN SPECIFICATIONS FOR OVERHEAD SIGN STRUCTURES. ALL CONSTRUCTION AND MATERIALS SHALL BE IN ACCORDANCE WITH STANDARD SPECIFICATION SECTION 644. STEEL FABRICATION SHALL BE IN ACCORDANCE WITH THE NYS STEEL CONSTRUCTION MANUAL
2. THE WEB MEMBERS IN EACH FACE OF THE TRUSS SHALL FORM CONTINUOUS TRUSSING FROM POST TO POST AND THERE SHALL BE AN EVEN NUMBER OF PANELS IN THE SPAN.
3. FOR VERTICAL ORIENTATION OF SIGN PANELS, SEE BD-OS14.
4. FOR SIGN PANEL ATTACHMENT DETAILS AND SPACING OF Z-BARS, SEE BD-OS14.
5. INSTALL WIRE INLETS IN BOTTOM CHORD (FRONT AND/OR BACK, AS NECESSARY) AT ℄ OF EACH SIGN AND AT FACE OF POST. IF SIGN LIGHTING IS NOT INCLUDED IN THE CONTRACT, WIRE INLETS SHALL BE OMITTED.
6. THE CONTRACTOR SHALL ESTABLISH THE TOP OF PEDESTAL OR SHAFT ELEVATIONS BASED ON THE INFORMATION SHOWN ON THE CONTRACT PLANS AND DATA DERIVED FROM FIELD SURVEYS. SPAN LENGTHS AND DIMENSIONS XL AND XR SHALL BE FIELD-VERIFIED PRIOR TO THE PLACEMENT OF THE FOUNDATIONS OR FABRICATION OF THE SIGN STRUCTURES AND ELEVATIONS AND DIMENSIONS SHALL BE PRESENTED ON THE SHOP DRAWINGS. A NEGATIVE XL OR XR INDICATES THAT THE BOTTOM OF BASE PLATE IS ABOVE THE POINT OF MINIMUM VERTICAL CLEARANCE. IF FIELD-VERIFIED SPAN LENGTHS, XL OR XR DIFFER FROM INFORMATION SHOWN ON THE CONTRACT PLANS, THE ENGINEER SHALL BE CONSULTED TO DETERMINE WHETHER DESIGN CHANGES ARE NEEDED.
7. SIGN MOUNTING LOCATION IS INDICATED BY US (UPSTATION) OR DS (DOWNSTATION) IN THE SPAN STRUCTURE TABLE (SEE SCHEMATIC IN PLAN VIEW).
8. NOMINAL POST HEIGHT IS THE LARGER OF LEFT OR RIGHT POSTS.
9. THE SIGN STRUCTURE HEIGHT IS DESIGNED TO PROVIDE THE MINIMUM VERTICAL CLEARANCE (VCL) INDICATED BETWEEN THE SIGN PANELS AND ROADWAY SURFACE, INCLUDING LIGHTING OR OTHER ATTACHMENTS, AT ANY POINT OVER THE ENTIRE ROADWAY WIDTH. THE REQUIRED MINIMUM VCL IS 1′-0" GREATER THAN THAT REQUIRED FOR NEW OVERPASS STRUCTURES ALONG THE ROUTE.
10. SUBSTRATE TYPE SHALL BE DESIGNATED S (SOIL), R (ROCK), OR '-' (SPECIAL FOUNDATION). FOR SHAFT FOUNDATIONS, WHEN ROCK IS SPECIFIED, THE TOTAL SHAFT LENGTH AND THE SHAFT LENGTH IN ROCK SHALL BE INDICATED IN PARENTHESIS (SEE DETAIL ON BD-OS3). FOR FOOTING DEPTH IN SOIL OR ROCK SEE FOUNDATION TABLE ON BD-OS3.
11. FOUNDATION TYPE SHALL BE DESIGNATED 'FOOTING', 'SHAFT', OR 'SPECIAL'.
12. FOR STANDARD SPAN STRUCTURES SELECTION TABLE AND DIMENSIONS D AND P, SEE BD-OS2.
13. FILLED OUT BY E.I.C. AT TIME OF AS-BUILTS.

REVISED	NEW YORK STATE OF OPPORTUNITY.	Department of Transportation Office of Structures
	OVERHEAD SIGN STRUCTURES SPAN STRUCTURES	
ERRATA		
	APPROVED: 02/25/19 ORIGINAL SIGNED BY RICHARD MARCHIONE, P.E. DEPUTY CHIEF ENGINEER (STRUCTURES)	ORIGINAL ISSUED UNDER EB 08-002 CURRENT ISSUED UNDER EB 19-012 EFFECTIVE WITH THE LETTING OF 02/25/19

FILE NAME = BD-OS1.2019-ROE0.dgn
DATE/TIME = 25-FEB-2019 15:07

STANDARD SPAN STRUCTURES

STRUCTURE TYPE	MAX. SPAN LENGTH (ft.)	MAX. SIGN AREA ($ft.^2$)	CHORD SPACING D (ft.)	POST SPACING P (ft.)	TRUSS			POST				BASE PLATE TYPE	FOUND. TYPE	MINIMUM PEDESTAL OR SHAFT DIA. (ft.)	SHAFT LENGTH HS (ft.)	SHAFT CONC. QTY. ($ft.^3$)
					CHORD NPS	DIAGONAL NPS	TRUSS WEIGHT (k)	MAX. NOMINAL POST HEIGHT (ft.)	POST NPS	DIAGONAL ANGLE	END FRAMES WEIGHT (k)					
S15-30-9	49′-0″	322	6′-7″	9′-10″	5 STD	2.5 STD	7.58	29′-0″	10 STD	L8″x8″x½″	11.98	BP-10	S-A	3′-6″	15′-0″	144
S15-30-11	49′-0″	322	6′-7″	9′-10″	5 STD	2.5 STD	7.58	36′-0″	12 STD	L8″x8″x½″	15.07	BP-12	S-B	3′-6″	17′-0″	164
S15-30-13	49′-0″	322	6′-7″	9′-10″	5 STD	2.5 STD	7.58	42′-0″	16 STD	L8″x8″x½″	19.34	BP-16	S-B	4′-0″	15′-0″	188
S15-60-9	49′-0″	645	6′-7″	9′-10″	5 STD	3 STD	8.32	29′-0″	12 STD	L8″x8″x½″	13.14	BP-12	S-B	3′-6″	17′-0″	164
S15-60-11	49′-0″	645	6′-7″	9′-10″	5 STD	3 STD	8.32	36′-0″	14 STD	L8″x8″x½″	15.84	BP-14	S-C	3′-6″	19′-0″	183
S15-60-13	49′-0″	645	6′-7″	9′-10″	5 STD	3 STD	8.32	42′-0″	16 STD	L8″x8″x½″	19.34	BP-16	S-D	4′-0″	19′-0″	239
S20-30-9	65′-0″	322	6′-7″	9′-10″	5 STD	2.5 STD	9.53	29′-0″	10 STD	L8″x8″x½″	11.98	BP-10	S-A	3′-6″	15′-0″	144
S20-30-11	65′-0″	322	6′-7″	9′-10″	5 STD	2.5 STD	9.53	36′-0″	12 STD	L8″x8″x½″	15.07	BP-12	S-B	3′-6″	17′-0″	164
S20-30-13	65′-0″	322	6′-7″	9′-10″	5 STD	2.5 STD	9.53	42′-0″	16 STD	L8″x8″x½″	19.34	BP-16	S-C	4′-0″	17′-0″	214
S20-60-9	65′-0″	645	6′-7″	9′-10″	6 STD	3 STD	11.62	29′-0″	12 STD	L8″x8″x½″	13.14	BP-12	S-C	3′-6″	19′-0″	183
S20-60-11	65′-0″	645	6′-7″	9′-10″	6 STD	3 STD	11.62	36′-0″	14 STD	L8″x8″x½″	15.84	BP-14	S-D	3′-6″	20′-0″	192
S20-60-13	65′-0″	645	6′-7″	9′-10″	6 STD	3 STD	11.62	42′-0″	16 STD	L8″x8″x½″	19.34	BP-16	S-E	4′-0″	20′-0″	251
S25-30-9	82′-0″	322	6′-7″	9′-10″	5 STD	2.5 STD	11.84	29′-0″	10 STD	L8″x8″x½″	11.98	BP-10	S-A	3′-6″	15′-0″	144
S25-30-11	82′-0″	322	6′-7″	9′-10″	5 STD	2.5 STD	11.84	36′-0″	12 STD	L8″x8″x½″	15.07	BP-12	S-B	3′-6″	17′-0″	164
S25-30-13	82′-0″	322	6′-7″	9′-10″	5 STD	2.5 STD	11.84	42′-0″	16 STD	L8″x8″x½″	19.34	BP-16	S-C	4′-0″	17′-0″	214
S25-60-9	82′-0″	645	6′-7″	9′-10″	6 STD	3 STD	14.44	29′-0″	12 STD	L8″x8″x½″	13.14	BP-12	S-C	3′-6″	19′-0″	183
S25-60-11	82′-0″	645	6′-7″	9′-10″	6 STD	3 STD	14.44	36′-0″	16 STD	L8″x8″x½″	17.07	BP-16	S-D	4′-0″	19′-0″	239
S25-60-13	82′-0″	645	6′-7″	9′-10″	6 STD	3 STD	14.44	42′-0″	18 STD	L8″x8″x½″	20.77	BP-18	S-E	4′-0″	20′-0″	251
S30-30-9	98′-0″	322	6′-7″	9′-10″	6 STD	2.5 STD	15.61	29′-0″	10 STD	L8″x8″x½″	11.98	BP-10	S-A	3′-6″	15′-0″	144
S30-30-11	98′-0″	322	6′-7″	9′-10″	6 STD	2.5 STD	15.61	36′-0″	12 STD	L8″x8″x½″	15.07	BP-12	S-B	3′-6″	17′-0″	164
S30-30-13	98′-0″	322	6′-7″	9′-10″	6 STD	2.5 STD	15.61	42′-0″	16 STD	L8″x8″x½″	19.34	BP-16	S-C	4′-0″	17′-0″	214
S30-60-9	98′-0″	645	6′-7″	9′-10″	8 STD	3 STD	20.84	29′-0″	12 STD	L8″x8″x½″	13.14	BP-12	S-C	3′-6″	19′-0″	183
S30-60-11	98′-0″	645	6′-7″	9′-10″	8 STD	3 STD	20.84	36′-0″	16 STD	L8″x8″x½″	17.07	BP-16	S-D	4′-0″	19′-0″	239
S30-60-13	98′-0″	645	6′-7″	9′-10″	8 STD	3 STD	20.84	42′-0″	18 STD	L8″x8″x½″	20.77	BP-18	S-F	4′-0″	22′-0″	276
S30-90-9	98′-0″	968	6′-7″	9′-10″	8 STD	3 STD	20.84	29′-0″	16 STD	L8″x8″x⅜″	15.18	BP-16	S-D	4′-0″	19′-0″	239
S30-90-11	98′-0″	968	6′-7″	9′-10″	8 STD	3 STD	20.84	36′-0″	18 STD	L8″x8″x⅜″	18.74	BP-18	S-F	4′-0″	22′-0″	276
S30-90-13	98′-0″	968	6′-7″	9′-10″	8 STD	3 STD	20.84	42′-0″	18 XS	L8″x8″x⅜″	25.78	BP-18	S-H	4′-0″	23′-0″	289
S35-30-9	114′-0″	322	6′-7″	9′-10″	6 STD	3 STD	19.23	29′-0″	10 STD	L8″x8″x½″	11.98	BP-10	S-B	3′-6″	17′-0″	164
S35-30-11	114′-0″	322	6′-7″	9′-10″	6 STD	3 STD	19.23	36′-0″	12 STD	L8″x8″x½″	15.07	BP-12	S-B	3′-6″	17′-0″	164
S35-30-13	114′-0″	322	6′-7″	9′-10″	6 STD	3 STD	19.23	42′-0″	16 STD	L8″x8″x½″	19.34	BP-16	S-C	4′-0″	17′-0″	214
S35-60-9	114′-0″	645	6′-7″	9′-10″	8 STD	3 STD	23.90	29′-0″	14 STD	L8″x8″x½″	14.17	BP-14	S-C	3′-6″	19′-0″	183
S35-60-11	114′-0″	645	6′-7″	9′-10″	8 STD	3 STD	23.90	36′-0″	16 STD	L8″x8″x½″	17.52	BP-16	S-E	4′-0″	20′-0″	251
S35-60-13	114′-0″	645	6′-7″	9′-10″	8 STD	3 STD	23.90	42′-0″	18 STD	L8″x8″x½″	21.28	BP-18	S-F	4′-0″	22′-0″	276
S35-90-9	114′-0″	968	6′-7″	9′-10″	8 STD	4 STD	26.93	29′-0″	16 STD	L8″x8″x⅜″	15.56	BP-16	S-E	4′-0″	20′-0″	251
S35-90-11	114′-0″	968	6′-7″	9′-10″	8 STD	4 STD	26.93	36′-0″	18 STD	L8″x8″x⅜″	19.17	BP-18	S-F	4′-0″	22′-0″	276
S35-90-13	114′-0″	968	6′-7″	9′-10″	8 STD	4 STD	26.93	42′-0″	18 XS	L8″x8″x⅜″	26.27	BP-18	S-H	4′-0″	23′-0″	289
S40-30-9	131′-0″	322	8′-2″	12′-2″	6 STD	3 STD	23.73	29′-0″	10 STD	L8″x8″x½″	13.00	BP-10	S-B	3′-6″	17′-0″	164
S40-30-11	131′-0″	322	8′-2″	12′-2″	6 STD	3 STD	23.73	36′-0″	12 STD	L8″x8″x½″	16.29	BP-12	S-C	3′-6″	17′-0″	164
S40-30-13	131′-0″	322	8′-2″	12′-2″	6 STD	3 STD	23.73	42′-0″	16 STD	L8″x8″x½″	20.76	BP-16	S-D	4′-0″	19′-0″	239
S40-60-9	131′-0″	645	8′-2″	12′-2″	8 STD	3 STD	29.07	29′-0″	14 STD	L8″x8″x⅜″	15.29	BP-14	S-D	3′-6″	19′-0″	183
S40-60-11	131′-0″	645	8′-2″	12′-2″	8 STD	3 STD	29.07	36′-0″	16 STD	L8″x8″x⅜″	18.84	BP-16	S-E	4′-0″	19′-0″	239
S40-60-13	131′-0″	645	8′-2″	12′-2″	8 STD	3 STD	29.07	42′-0″	18 STD	L8″x8″x⅜″	22.80	BP-18	S-F	4′-0″	20′-0″	251
S40-90-9	131′-0″	968	8′-2″	12′-2″	8 STD	4 STD	33.14	29′-0″	16 STD	L8″x8″x⅜″	16.73	BP-16	S-E	4′-0″	19′-0″	239
S40-90-11	131′-0″	968	8′-2″	12′-2″	8 STD	4 STD	33.14	36′-0″	18 STD	L8″x8″x⅜″	20.56	BP-18	S-G	4′-0″	22′-0″	276
S40-90-13	131′-0″	968	8′-2″	12′-2″	8 STD	4 STD	33.14	42′-0″	20 STD	L8″x8″x⅝″	24.81	BP-20	S-I	4′-0″	23′-0″	289

STANDARD SPAN STRUCTURES

STRUCTURE TYPE	MAX. SPAN LENGTH (ft.)	MAX. SIGN AREA ($ft.^2$)	CHORD SPACING D (ft.)	POST SPACING P (ft.)	TRUSS			POST				BASE PLATE TYPE	FOUND. TYPE	MINIMUM PEDESTAL OR SHAFT DIA. (ft.)	SHAFT LENGTH HS (ft.)	SHAFT CONC. QTY. ($ft.^3$)
					CHORD NPS	DIAGONAL NPS	TRUSS WEIGHT (k)	MAX. NOMINAL POST HEIGHT (ft.)	POST NPS	DIAGONAL ANGLE	END FRAMES WEIGHT (k)					
S45-30-9	147′-0″	322	8′-2″	12′-2″	8 STD	3 STD	31.78	29′-0″	10 STD	L8″x8″x½″	13.00	BP-10	S-B	3′-6″	17′-0″	164
S45-30-11	147′-0″	322	8′-2″	12′-2″	8 STD	3 STD	31.78	36′-0″	12 STD	L8″x8″x½″	16.29	BP-12	S-C	3′-6″	17′-0″	164
S45-30-13	147′-0″	322	8′-2″	12′-2″	8 STD	3 STD	31.78	42′-0″	16 STD	L8″x8″x½″	20.76	BP-16	S-D	4′-0″	19′-0″	239
S45-60-9	147′-0″	645	8′-2″	12′-2″	8 STD	4 STD	36.05	29′-0″	14 STD	L8″x8″x⅜″	15.29	BP-14	S-D	3′-6″	19′-0″	183
S45-60-11	147′-0″	645	8′-2″	12′-2″	8 STD	4 STD	36.05	36′-0″	16 STD	L8″x8″x⅜″	18.84	BP-16	S-E	4′-0″	19′-0″	239
S45-60-13	147′-0″	645	8′-2″	12′-2″	8 STD	4 STD	36.05	42′-0″	18 STD	L8″x8″x⅜″	22.81	BP-18	S-G	4′-0″	22′-0″	276
S45-90-9	147′-0″	968	8′-2″	12′-2″	10 STD	4 STD	43.50	29′-0″	16 STD	L8″x8″x⅝″	16.73	BP-16	S-F	4′-0″	20′-0″	251
S45-90-11	147′-0″	968	8′-2″	12′-2″	10 STD	4 STD	43.50	36′-0″	18 STD	L8″x8″x⅝″	20.56	BP-18	S-G	4′-0″	22′-0″	276
S45-90-13	147′-0″	968	8′-2″	12′-2″	10 STD	4 STD	43.50	42′-0″	20 STD	L8″x8″x⅝″	24.81	BP-20	S-I	4′-0″	23′-0″	289
S50-30-9	164′-0″	322	8′-2″	12′-2″	8 STD	4 STD	39.68	29′-0″	10 STD	L8″x8″x½″	13.00	BP-10	S-B	3′-6″	17′-0″	164
S50-30-11	164′-0″	322	8′-2″	12′-2″	8 STD	4 STD	39.68	36′-0″	12 STD	L8″x8″x½″	16.29	BP-12	S-C	3′-6″	17′-0″	164
S50-30-13	164′-0″	322	8′-2″	12′-2″	8 STD	4 STD	39.68	42′-0″	16 STD	L8″x8″x½″	20.76	BP-16	S-D	4′-0″	19′-0″	239
S50-60-9	164′-0″	645	8′-2″	12′-2″	10 STD	4 STD	47.95	29′-0″	14 STD	L8″x8″x⅜″	15.29	BP-14	S-D	3′-6″	19′-0″	183
S50-60-11	164′-0″	645	8′-2″	12′-2″	10 STD	4 STD	47.95	36′-0″	16 STD	L8″x8″x⅜″	18.84	BP-16	S-F	4′-0″	20′-0″	251
S50-60-13	164′-0″	645	8′-2″	12′-2″	10 STD	4 STD	47.95	42′-0″	18 STD	L8″x8″x⅜″	22.81	BP-18	S-G	4′-0″	22′-0″	276
S50-90-9	164′-0″	968	8′-2″	12′-2″	10 STD	4 STD	47.95	29′-0″	18 STD	L8″x8″x¾″	18.55	BP-18	S-F	4′-0″	20′-0″	251
S50-90-11	164′-0″	968	8′-2″	12′-2″	10 STD	4 STD	47.95	36′-0″	20 STD	L8″x8″x¾″	22.74	BP-20	S-H	4′-0″	22′-0″	276
S50-90-13	164′-0″	968	8′-2″	12′-2″	10 STD	4 STD	47.95	42′-0″	20 XS	L8″x8″x¾″	31.00	BP-20	S-J	4′-0″	23′-0″	289
S55-30-9	180′-0″	322	8′-2″	12′-2″	8 STD	4 STD	43.43	29′-0″	12 STD	L8″x8″x½″	14.21	BP-12	S-B	3′-6″	17′-0″	164
S55-30-11	180′-0″	322	8′-2″	12′-2″	8 STD	4 STD	43.43	36′-0″	12 STD	L8″x8″x½″	16.29	BP-12	S-C	3′-6″	17′-0″	164
S55-30-13	180′-0″	322	8′-2″	12′-2″	8 STD	4 STD	43.43	42′-0″	16 STD	L8″x8″x½″	20.76	BP-16	S-D	4′-0″	19′-0″	239
S55-60-9	180′-0″	645	8′-2″	12′-2″	10 STD	4 STD	52.53	29′-0″	16 STD	L8″x8″x⅜″	16.34	BP-16	S-D	4′-0″	19′-0″	239
S55-60-11	180′-0″	645	8′-2″	12′-2″	10 STD	4 STD	52.53	36′-0″	16 STD	L8″x8″x⅜″	18.84	BP-16	S-F	4′-0″	20′-0″	251
S55-60-13	180′-0″	645	8′-2″	12′-2″	10 STD	4 STD	52.53	42′-0″	20 STD	L8″x8″x⅜″	24.27	BP-20	S-H	4′-0″	22′-0″	276
S55-90-9	180′-0″	968	8′-2″	12′-2″	12 STD	4 STD	59.37	29′-0″	18 STD	L8″x8″x¾″	18.55	BP-18	S-F	4′-0″	20′-0″	251
S55-90-11	180′-0″	968	8′-2″	12′-2″	12 STD	4 STD	59.37	36′-0″	20 STD	L8″x8″x¾″	22.74	BP-20	S-H	4′-0″	22′-0″	276
S55-90-13	180′-0″	968	8′-2″	12′-2″	12 STD	4 STD	59.37	42′-0″	20 XS	L8″x8″x¾″	31.00	BP-20	S-J	4′-0″	23′-0″	289
S60-30-9	196′-0″	322	8′-2″	12′-2″	10 STD	4 STD	57.10	29′-0″	12 STD	L8″x8″x½″	14.21	BP-12	S-B	3′-6″	17′-0″	164
S60-30-11	196′-0″	322	8′-2″	12′-2″	10 STD	4 STD	57.10	36′-0″	14 STD	L8″x8″x½″	17.08	BP-14	S-C	3′-6″	17′-0″	164
S60-30-13	196′-0″	322	8′-2″	12′-2″	10 STD	4 STD	57.10	42′-0″	16 STD	L8″x8″x½″	20.76	BP-16	S-D	4′-0″	19′-0″	239
S60-60-9	196′-0″	645	8′-2″	12′-2″	10 STD	4 STD	57.10	29′-0″	16 STD	L8″x8″x⅜″	16.34	BP-16	S-E	4′-0″	19′-0″	239
S60-60-11	196′-0″	645	8′-2″	12′-2″	10 STD	4 STD	57.10	36′-0″	18 STD	L8″x8″x⅜″	20.09	BP-18	S-F	4′-0″	20′-0″	251
S60-60-13	196′-0″	645	8′-2″	12′-2″	10 STD	4 STD	57.10	42′-0″	20 STD	L8″x8″x⅜″	24.27	BP-20	S-H	4′-0″	22′-0″	276
S60-90-9	196′-0″	968	8′-2″	12′-2″	12 STD	4 STD	64.56	29′-0″	18 STD	L8″x8″x¾″	18.55	BP-18	S-F	4′-0″	20′-0″	251
S60-90-11	196′-0″	968	8′-2″	12′-2″	12 STD	4 STD	64.56	36′-0″	20 STD	L8″x8″x¾″	22.74	BP-20	S-H	4′-0″	22′-0″	276
S60-90-13	196′-0″	968	8′-2″	12′-2″	12 STD	4 STD	64.56	42′-0″	20 XS	L8″x8″x¾″	31.00	BP-20	S-J	4′-0″	23′-0″	289
S65-30-9	213′-0″	322	8′-2″	12′-2″	10 STD	4 STD	62.38	29′-0″	12 STD	L8″x8″x½″	14.21	BP-12	S-C	3′-6″	17′-0″	164
S65-30-11	213′-0″	322	8′-2″	12′-2″	10 STD	4 STD	62.38	36′-0″	14 STD	L8″x8″x½″	17.08	BP-14	S-D	3′-6″	19′-0″	183
S65-30-13	213′-0″	322	8′-2″	12′-2″	10 STD	4 STD	62.38	42′-0″	16 STD	L8″x8″x½″	20.76	BP-16	S-E	4′-0″	19′-0″	239
S65-60-9	213′-0″	645	8′-2″	12′-2″	12 STD	4 STD	70.44	29′-0″	16 STD	L8″x8″x⅜″	16.34	BP-16	S-E	4′-0″	19′-0″	239
S65-60-11	213′-0″	645	8′-2″	12′-2″	12 STD	4 STD	70.44	36′-0″	18 STD	L8″x8″x⅜″	20.09	BP-18	S-G	4′-0″	22′-0″	276
S65-60-13	213′-0″	645	8′-2″	12′-2″	12 STD	4 STD	70.44	42′-0″	20 STD	L8″x8″x⅜″	24.27	BP-20	S-H	4′-0″	22′-0″	276
S65-90-9	213′-0″	968	8′-2″	12′-2″	12 XS	5 STD	95.23	29′-0″	20 STD	L8″x8″x¾″	19.58	BP-20	S-G	4′-0″	22′-0″	276
S65-90-11	213′-0″	968	8′-2″	12′-2″	12 XS	5 STD	95.23	36′-0″	20 XS	L8″x8″x¾″	27.14	BP-20	S-I	4′-0″	23′-0″	289
S65-90-13	213′-0″	968	8′-2″	12′-2″	12 XS	5 STD	95.23	42′-0″	20 XS	L8″x8″x¾″	31.00	BP-20	S-K	4′-0″	25′-0″	314

NOTES:

1. STRUCTURE TYPE
   EXAMPLE: S15-30-9
   - SPAN
   - MAX. SPAN LENGTH
   - MAX. NOMINAL POST HEIGHT
   - MAX. SIGN AREA

   (NOTE: DESIGNATIONS ARE BASED ON THE ORIGINAL METRIC DIMENSIONING)

2. FOR SHAFT AND RECTANGULAR FOOTING DETAILS, SEE BD-OS3.

3. SHAFT LENGTHS AND CONCRETE QUANTITIES ARE FOR SHAFTS IN S (SOIL) SUBSTRATES AS INDICATED IN THE SUBSTRATE COLUMNS ON BD-OS1. FOR SHAFTS IN R (ROCK) SUBSTRATES OR SPECIAL FOUNDATIONS, ADJUST QUANTITIES AS NECESSARY FOR BID PURPOSES IN ACCORDANCE WITH BD-OS3 OR SPECIAL FOUNDATION DRAWINGS.

4. SIGN HEIGHT, AS SHOWN ON BD-OS14, SHALL BE A MAXIMUM OF 19′-6″.

5. SHAFT CONCRETE QUANTITY SHOWN IS FOR A SINGLE SHAFT. MULTIPLY BY THE NUMBER OF SHAFTS REQUIRED (TWO PER FOUNDATION) FOR BID QUANTITY PURPOSES.

6. TRUSS WEIGHTS SHOWN ARE BASED ON MAXIMUM SPAN LENGTH AND REFLECT THE OPTIONAL DOUBLE ANGLE SUBSTITUTION FOR HORIZONTAL DIAGONALS, STRUTS, AND CROSS BRACES AS SHOWN IN THE TABLE ON BD-OS7. TRUSS WEIGHTS DO NOT INCLUDE SIGN WEIGHT.

7. END FRAME WEIGHTS SHOWN INCLUDE BOTH END FRAMES AND ARE BASED ON MAXIMUM NOMINAL POST HEIGHT AND SINGLE ANGLE DIAGONALS.

8. PIPE SIZES SHALL BE BASED ON DIMENSIONS FROM ASTM A53

9. FABRICATORS SHALL PLACE ALL SHIPPING WEIGHTS ON SHOP DRAWINGS.

10. THESE TABLES ARE FOR USE WITH ⅛″ THICK ALUMINUM FLAT PANEL SIGNS ONLY.

FILE NAME = BD-OS2_2019-R0E0.dgn
DATE/TIME = 25-FEB-2019 15:07

REVISED	NEW YORK STATE OF OPPORTUNITY.	Department of Transportation Office of Structures
	OVERHEAD SIGN STRUCTURES SPAN STRUCTURES SELECTION TABLE	
ERRATA	APPROVED: 02/25/19 ORIGINAL SIGNED BY RICHARD MARCHIONE, P.E. DEPUTY CHIEF ENGINEER (STRUCTURES)	ORIGINAL ISSUED UNDER EB 08-002 CURRENT ISSUED UNDER EB 19-012 EFFECTIVE WITH THE LETTING OF 02/25/19

FOUNDATION TABLE

TYPE	FOOTING ON SOIL								FOOTING ON ROCK								PEDESTAL/SHAFT VERTICAL REINFORCEMENT (SEE NOTE 11)	
	SIZE			H	* TOTAL CONCRETE QUANTITY (ft.^{3})		LONG. REINF. T & B SIZE	TRANS. REINF. T & B SIZE	SIZE			H	* TOTAL CONCRETE QUANTITY (ft.^{3})		LONG. REINF. T & B SIZE	TRANS. REINF. T & B SIZE		
	L	W	T		3'-6" PED.	4'-0" PED.			L	W	T		3'-6" PED.	4'-0" PED.			NO. OF BARS	SIZE
S-A	18'-1"	6'-11"	2'-0"	8'-6"	375.2	—	#5	#5	16'-5"	6'-11"	2'-0"	8'-6"	352.2	—	#5	#5	16	#5(E)
S-B	19'-1"	8'-7"	2'-0"	8'-10"	459.1	499.3	#6	#5	18'-5"	7'-7"	2'-8"	8'-6"	484.7	519.0	#6	#5	18	#5(E)
S-C	21'-0"	8'-11"	2'-8"	8'-10"	618.0	654.3	#7	#5	19'-0"	8'-6"	3'-0"	8'-10"	596.8	631.1	#6	#5	16	#6(E)
S-D	23'-0"	9'-7"	3'-0"	9'-2"	779.9	816.2	#7	#5	20'-0"	8'-10"	3'-7"	8'-10"	734.1	765.0	#6	#5	16	#6(E)
S-E	24'-0"	9'-11"	3'-7"	9'-2"	—	993.2	#7	#5	20'-0"	9'-10"	3'-7"	9'-2"	—	845.1	#6	#6	18	#6(E)
S-F	25'-7"	10'-6"	3'-7"	9'-6"	—	1111.3	#8	#5	20'-0"	11'-2"	4'-0"	9'-6"	—	1031.6	#6	#8	18	#6(E)
S-G	25'-11"	11'-2"	4'-0"	9'-6"	—	1295.8	#8	#5	20'-4"	11'-6"	4'-0"	9'-6"	—	1073.6	#7	#8	16	#7(E)
S-H	26'-7"	11'-2"	4'-0"	9'-6"	—	3000.4	#8	#5	21'-0"	12'-2"	4'-0"	9'-10"	—	1168.6	#7	#8	16	#7(E)
S-I	26'-11"	11'-6"	4'-0"	9'-6"	—	1376.4	#8	#5	21'-0"	12'-6"	4'-0"	9'-10"	—	1196.6	#7	#8	16	#7(E)
S-J	26'-11"	12'-2"	4'-0"	9'-10"	—	1456.6	#8	#5	21'-8"	12'-6"	4'-7"	9'-10"	—	1373.3	#7	#8	18	#7(E)
S-K	27'-11"	12'-2"	4'-7"	9'-10"	—	1688.7	#8	#5	21'-8"	13'-2"	4'-7"	10'-2"	—	1447.9	#7	#8	16	#8(E)

* NOTE: TOTAL CONCRETE QUANTITY INCLUDES FOOTING AND PEDESTAL CONCRETE.

FOUNDATION ITEM NUMBERS	
FOUNDATION TYPE (SEE NOTE 3)	ITEM NUMBER
SHAFT	644.20
FOOTING	644.30

NOTES:

1. FOR DETAILS OF ANCHOR BOLTS AND TEMPLATES SEE BD-OS13.
2. INSTALL ONE NPS 2 STD GALVANIZED CONDUIT IN EACH FOUNDATION AT PEDESTAL OR SHAFT AT FACE OF STRUCTURE WHERE SIGNS ARE MOUNTED. OMIT IF SIGN LIGHTING IS NOT IN THE CONTRACT.
3. FOR FOUNDATION TYPE, SEE BD-OS1.
4. FOR POST SPACING (P), PEDESTAL AND SHAFT DIAMETER, SHAFT LENGTH (HS) AND CONCRETE QUANTITY WHEN IN SUBSTRATE TYPE S (SOIL), SEE BD-OS2.
5. WHERE A FOOTING IS TO BE PLACED ON ROCK, REMOVE ALL DISINTEGRATED OR SHATTERED MATERIAL TO LINES AND LEVELS ORDERED BY THE ENGINEER. IF TOP OF SOUND ROCK IS BELOW PLANNED ELEVATION OF BOTTOM OF FOOTING, BACKFILL WITH CLASS A CONCRETE TO THE PLANNED ELEVATION, OR PROCEED AS ORDERED BY THE ENGINEER. IF TOP OF SOUND ROCK IS ABOVE PLANNED ELEVATION OF BOTTOM OF FOOTING, SEE NOTE 10 AND PROCEED AS ORDERED BY THE ENGINEER. ROCK REMOVED BELOW THE ELEVATION DIRECTED BY THE ENGINEER AND BEYOND THE FACE OF THE FINISHED FOOTING, SHALL BE REPLACED BY BACKFILL OF CLASS A CONCRETE FOR WHICH NO PAYMENT WILL BE MADE.
6. THE GEOTECHNICAL ENGINEERING BUREAU SHALL BE CONSULTED UNDER THE FOLLOWING CIRCUMSTANCES:
   - A. FOOTING OR SHAFT IS PLACED IN SOFT CLAY OR ORGANIC DEPOSITS.
   - B. GROUNDWATER ELEVATION IS ABOVE BOTTOM OF FOOTING OR SHAFT.
   - C. UNANTICIPATED ROCK IS ENCOUNTERED WITHIN THE DEPTH OF THE SHAFT.
   - D. DEPTH TO SOUND ROCK FOR SHAFTS DIFFERS FROM THAT INDICATED ON BD-OS1.
   - E. SLOPE OF FINISHED GRADE EXCEEDS 1 ON 2.
7. ANY DRILLING OF ROCK FOR SHAFT FOUNDATIONS SHALL BE PERFORMED FROM THE EXISTING EARTH SURFACE THROUGH THE AUGER HOLE FORMED DURING THE DRILLING OPERATION. CASING, IF USED, SHALL BE REMOVED PRIOR TO PLACING SHAFT CONCRETE.
8. HEIGHT OF PEDESTAL OR LENGTH OF SHAFT MAY BE INCREASED AS ORDERED BY THE ENGINEER AS MUCH AS 1'-8" IF NECESSARY TO REACH GOOD FOUNDATION MATERIAL.
9. THE MINIMUM SHAFT DIAMETER SHALL BE BOLT CIRCLE DIAMETER + 8"
10. EXCAVATION, BACKFILL, FORM WORK, REINFORCEMENT, CONDUIT STUB-OUT AND ALL OTHER LABOR AND MATERIALS NECESSARY TO CONSTRUCT THE FOUNDATIONS SHALL BE INCLUDED IN THE PRICE BID FOR THE FOUNDATION CONCRETE.
11. THE FOOTINGS SHOWN HAVE BEEN DESIGNED USING THE SOIL OVERBURDEN TO RESIST OVERTURNING. IF IT IS DETERMINED THAT THE FOOTING DEPTH NEEDS TO BE REDUCED, CONTACT THE GEOTECHNICAL ENGINEERING BUREAU.
12. (E) DENOTES EPOXY COATED REINFORCEMENT. OTHER CORROSION RESISTANT OPTIONS AVAILABLE.
13. SIGN STRUCTURE FOUNDATIONS WERE DESIGNED USING A CONCRETE MINIMUM COMPRESSIVE STRENGTH OF 3000 PSI AT 28 DAYS.

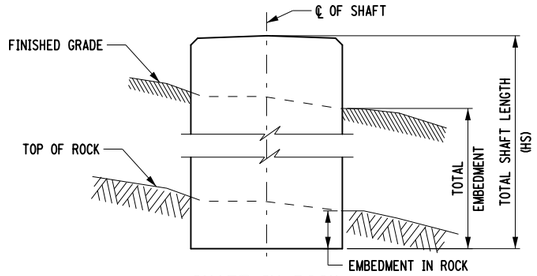

SHAFT IN ROCK

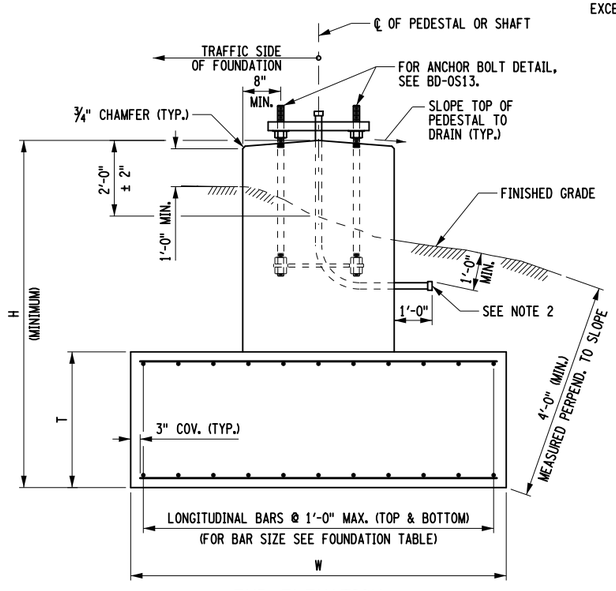

END ELEVATION
(VERTICAL REINFORCEMENT NOT SHOWN)
(FOOTING SHOWN, SHAFT SIMILAR TO PEDESTAL PORTION OF DETAIL)

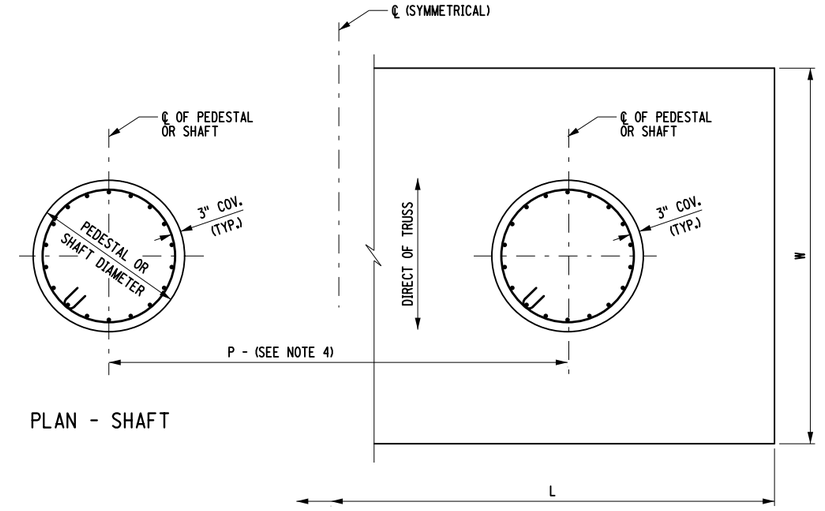

PLAN - SHAFT

PLAN - FOOTING

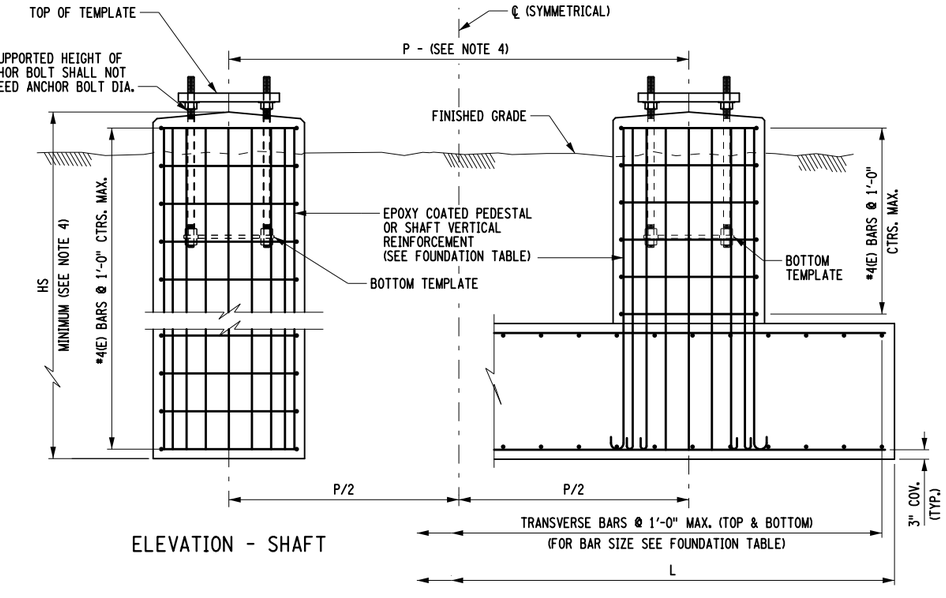

ELEVATION - SHAFT

SIDE ELEVATION - FOOTING

REVISED	NEW YORK STATE OF OPPORTUNITY.	Department of Transportation Office of Structures
	OVERHEAD SIGN STRUCTURES SPAN STRUCTURES FOUNDATIONS	
ERRATA	APPROVED: 02/25/19 ORIGINAL SIGNED BY RICHARD MARCHIONE, P.E. DEPUTY CHIEF ENGINEER (STRUCTURES)	ORIGINAL ISSUED UNDER EB 08-002 CURRENT ISSUED UNDER EB 19-012 EFFECTIVE WITH THE LETTING OF 02/25/19

FILE NAME = BD-OS3.2019-R0E0.dgn
DATE/TIME = 25-FEB-2019 15:07

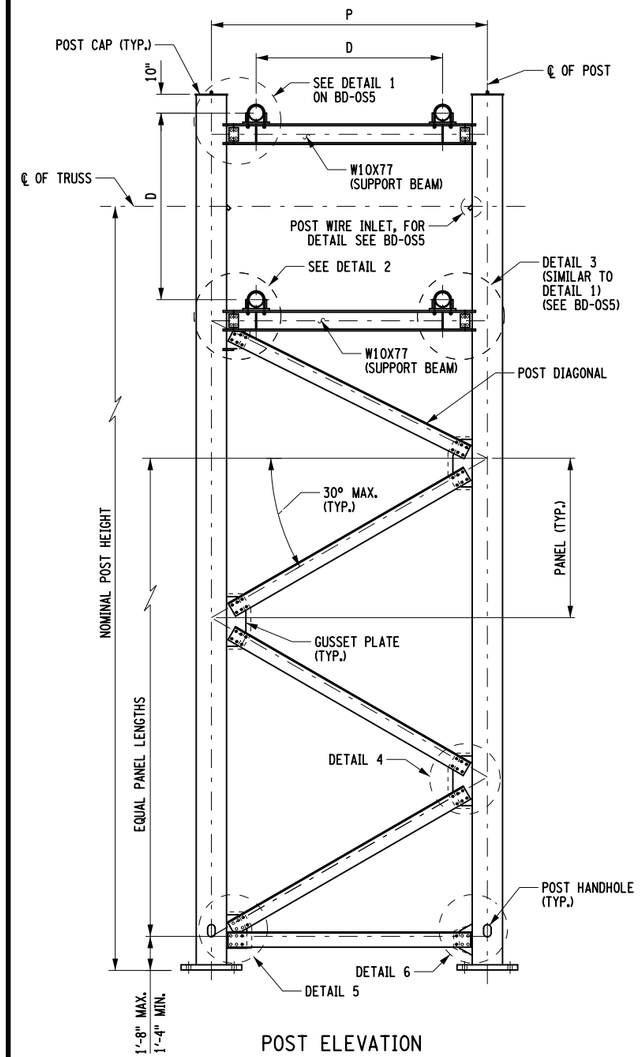

POST ELEVATION

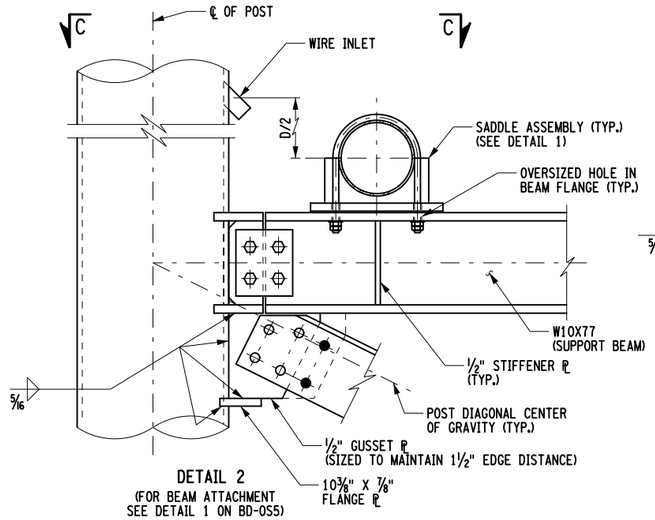

DETAIL 2
(FOR BEAM ATTACHMENT SEE DETAIL 1 ON BD-OS5)

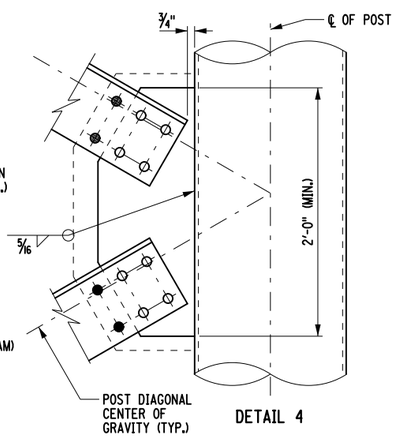

DETAIL 4

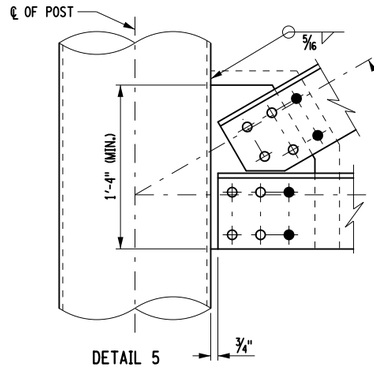

DETAIL 5

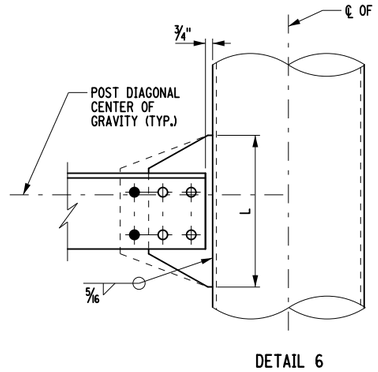

DETAIL 6

TYPICAL POST CONNECTION DETAILS
(SHOWN FOR FOUR OR SIX BOLT CONNECTIONS OF POST DIAGONAL)

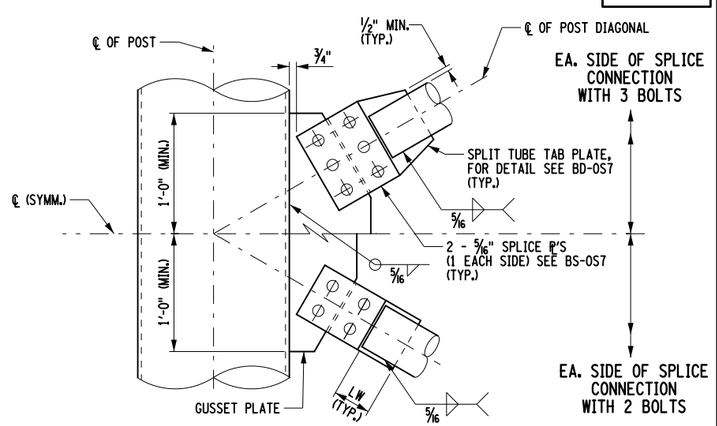

TUBE CONNECTION
TYPICAL OPTIONAL SPLIT

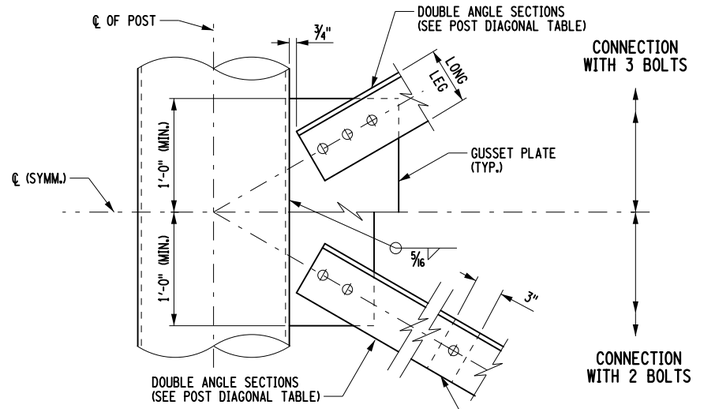

TYPICAL OPTIONAL DOUBLE ANGLE CONNECTION

NOTES:

1. PLACE HANDHOLES OPPOSITE TRAFFIC. FOR DETAIL SEE BD-OS13.
2. FOR POST CAP DETAILS, SEE BD-OS13.
3. FOR DETAILS 1 AND 3 AND SECTION C-C SEE BD-OS5.
4. ALL BOLTS SHALL BE HIGH STRENGTH ⅞" DIA. IN STANDARD HOLES, UNLESS OTHERWISE NOTED.
5. GUSSET AND SPLIT TUBE TAB PLATES SHALL BE ½" THICK UNLESS OTHERWISE NOTED.
6. BOLTS DESIGNATED AS ● ARE FOR SIX BOLT CONNECTIONS ONLY.
7. TOP SUPPORT BEAMS SHALL BE INSTALLED AFTER TRUSS HAS BEEN ERECTED AND LEVELED.
8. A POST WIRE INLET SHALL BE INSTALLED ADJACENT TO EACH TRUSS FACE CARRYING A LIGHTED SIGN PANEL. FOR DETAIL, SEE BD-OS5.
9. FOR SPAN SELECTION TABLE AND DIMENSIONS P AND D, SEE BD-OS2.

POST DIAGONAL				
SINGLE ANGLE SIZE	L MIN.	OPTIONAL SPLIT TUBE		OPTIONAL DOUBLE ANGLE
		PIPE NPS	LW MIN.	ANGLE SIZE
L8"x8"x½"	1'-1"	4 STD	3"	2-L4"x3"x⅜"
L8"x8"x⅝"	1'-2"	5 STD	4"	2-L6"x4"x⅜"
L8"x8"x⅝"	1'-3"	5 STD	4"	2-L6"x4"x⅞"
L8"x8"x¾"	1'-4"	5 STD	4"	2-L6"x4"x⅜"

SPAN LENGTH (ft.)	SIGN AREA (ft.²)	NUMBER OF BOLTS IN DIAGONAL CONNECTION		
		SINGLE ANGLE	SPLIT TUBE (EACH SIDE OF SPLICE)	DOUBLE ANGLE
≤ 164′	ALL	4	2	2
180′	UP TO 645	4	2	2
ALL OTHERS	ALL	6	3	3

REVISED

ERRATA

NEW YORK STATE OF OPPORTUNITY. Department of Transportation
Office of Structures

OVERHEAD SIGN STRUCTURES
SPAN STRUCTURES
POST DETAILS SHEET 1 OF 2

APPROVED: 02/25/19
ORIGINAL SIGNED BY
RICHARD MARCHIONE, P.E.
DEPUTY CHIEF ENGINEER (STRUCTURES)

ORIGINAL ISSUED UNDER EB 08-002

CURRENT ISSUED UNDER EB 19-012
EFFECTIVE WITH THE LETTING OF 02/25/19

FILE NAME = BD-OS4_2019-R0E0.dgn
DATE/TIME = 25-FEB-2019 15:07

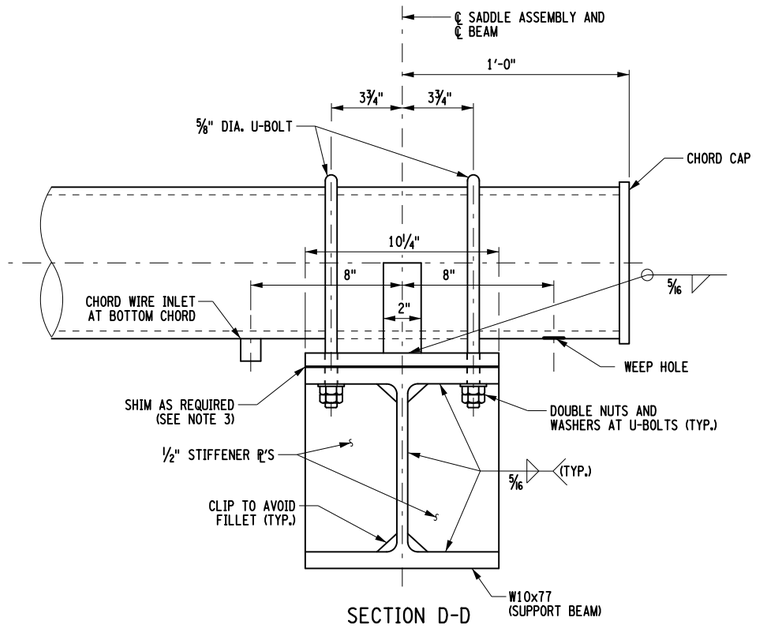

SECTION D-D

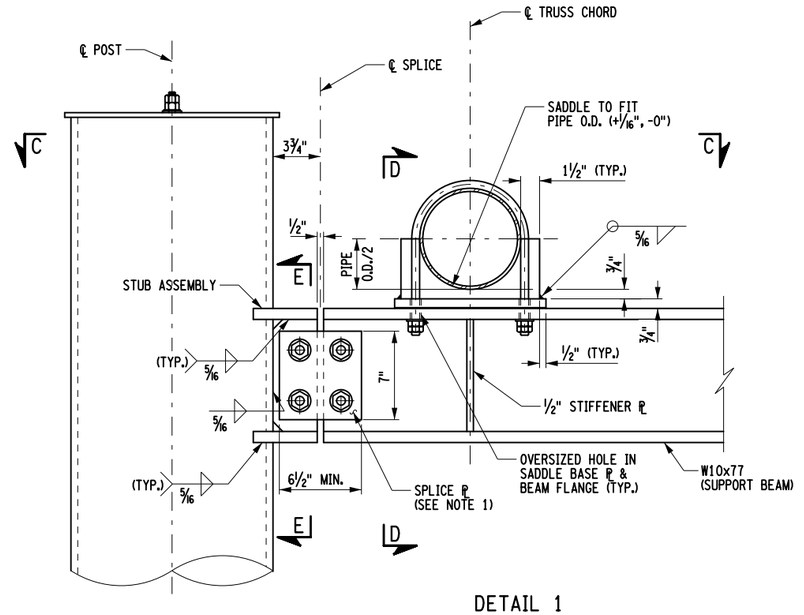

DETAIL 1
(DETAIL 3 SIMILAR, OPPOSITE HAND)

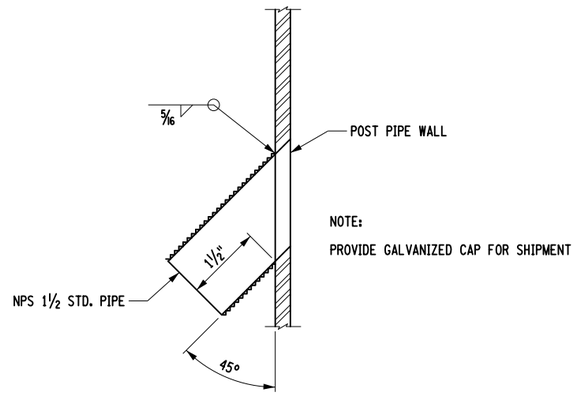

POST WIRE
INLET DETAIL

NOTE:

ONLY REQUIRED WHEN LIGHTING ON STRUCTURE.

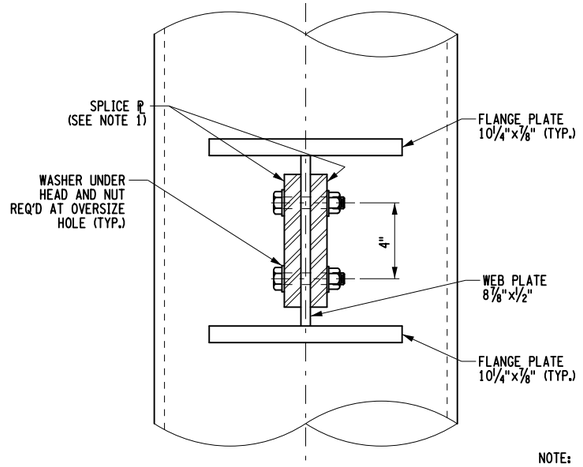

SECTION E-E

NOTE:

STUB MAY BE FABRICATED FROM W10X77 OR WELDED ASSEMBLY AS SHOWN.

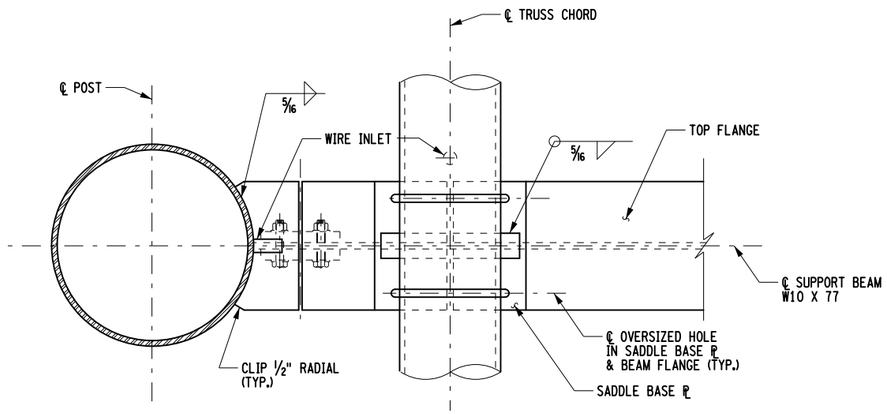

SECTION C-C

NOTES:

1. SPLICE PLATES SHALL BE ⅝" THICK AT TOP BEAM CONNECTIONS, ⅞" THICK AT LOWER BEAM CONNECTIONS. HOLES IN WEB PLATES AT TOP BEAM AND HOLES IN LOWER BEAM CONNECTION SHALL BE STANDARD. HOLES IN TOP BEAM SPLICE PLATES MAY BE OVERSIZE.
2. FOR LOCATION OF DETAILS 1 AND 3, SEE BD-OS4.
3. SADDLE ASSEMBLIES SHALL BE SHIMMED AS REQUIRED TO PROVIDE LEVEL SEAT FOR CHORD WHEN ALL DEAD LOADS ARE APPLIED. VARIABLE THICKNESS SHIM PACKS SHALL BE PROVIDED. THE MAXIMUM ACCEPTABLE GAP SHALL BE 1/16". SHIMS SHALL HAVE OVERSIZE HOLES TO ACCEPT ⅝" U-BOLTS. ALL SHIMS SHALL BE GALVANIZED STEEL.
4. FOR CHORD WIRE INLET DETAIL, SEE BD-OS1.
5. FOR CHORD CAP DETAILS, SEE BD-OS13.

REVISED	NEW YORK STATE OF OPPORTUNITY.	Department of Transportation Office of Structures
	OVERHEAD SIGN STRUCTURES SPAN STRUCTURES POST DETAIL SHEET 2 OF 2	
ERRATA	APPROVED: 02/25/19 ORIGINAL SIGNED BY RICHARD MARCHIONE, P.E. DEPUTY CHIEF ENGINEER (STRUCTURES)	ORIGINAL ISSUED UNDER EB 08-002 CURRENT ISSUED UNDER EB 19-012 EFFECTIVE WITH THE LETTING OF 02/25/19

FILE NAME = BD-OS5.2019-R0E0.dgn
DATE/TIME = 25-FEB-2019 15:07

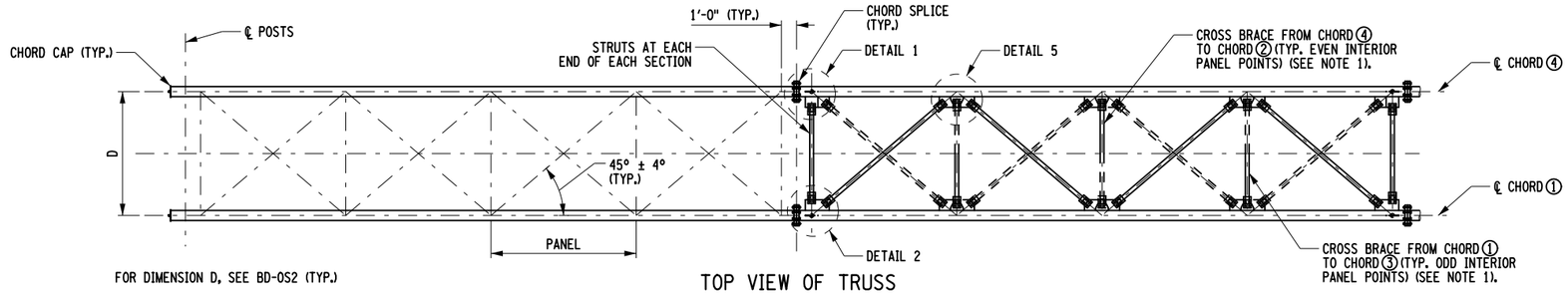

FOR DIMENSION D, SEE BD-OS2 (TYP.)

TOP VIEW OF TRUSS

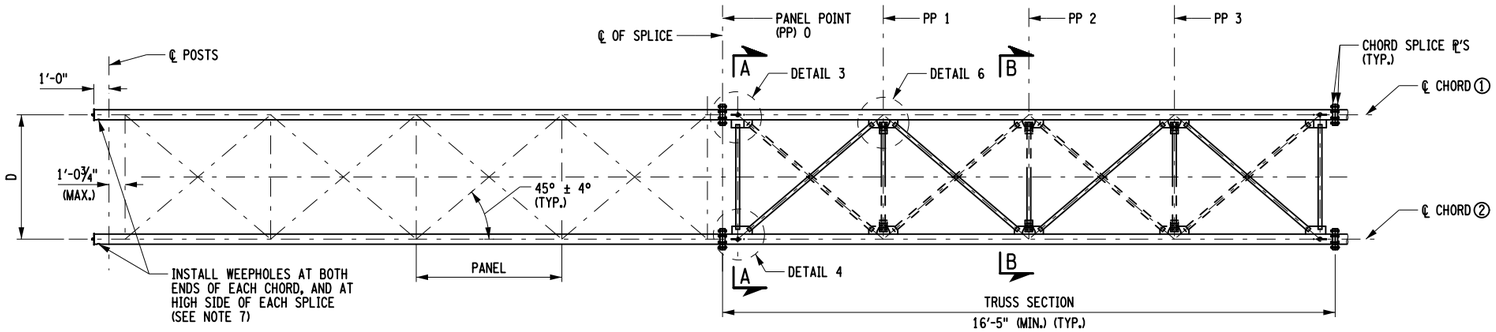

FRONT VIEW OF TRUSS

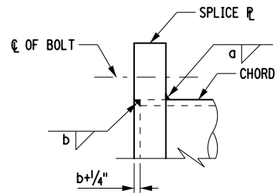

TYPICAL CHORD SPLICE WELD DETAIL

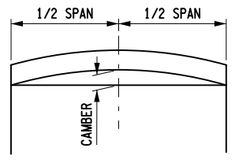

CAMBER REQUIRED

CAMBER TABLE	
MAX. SPAN	CAMBER
49'-2½"	¾"
65'-7½"	1 3/16"
82'-0¼"	1½"
98'-5⅛"	2"
114'-10"	2⅜"
131'-2¾"	2¾"
147'-7⅝"	3⅛"
164'-0"	4"
180'-5 7/16"	4¾"
196'-10¼"	5½"
213'-3"	7"

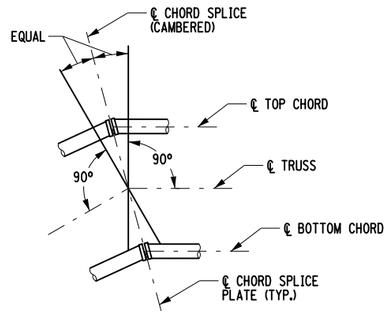

CAMBER DETAIL
(SEE NOTE 2)

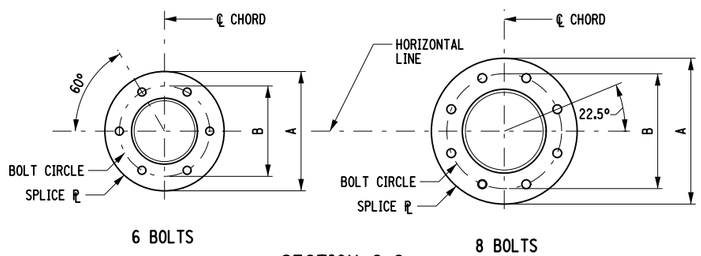

SECTION C-C
CHORD SPLICE DETAILS

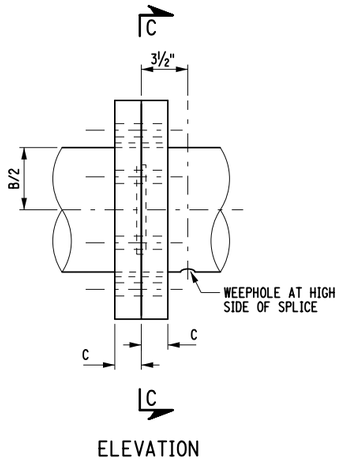

ELEVATION

CHORD SPLICE TABLE							
CHORD NPS	PLATE			HIGH STRENGTH BOLTS		FILLET WELD	
	A	B	C	NUMBER	DIA.	a	b
5 STD	1'-1"	10"	1½"	6	⅞"	5/16"	¼"
6 STD	1'-1½"	10¼"	1½"	6	⅞"	5/16"	¼"
8 STD	1'-4½"	1'-1"	2"	8	1"	⅜"	¼"
10 STD	1'-6"	1'-2½"	2"	8	1"	⅜"	¼"
12 STD	1'-9¼"	1'-5¼"	2⅜"	8	1⅛"	½"	5/16"
12 XS	1'-10"	1'-6"	2⅜"	8	1¼"	½"	⅜"

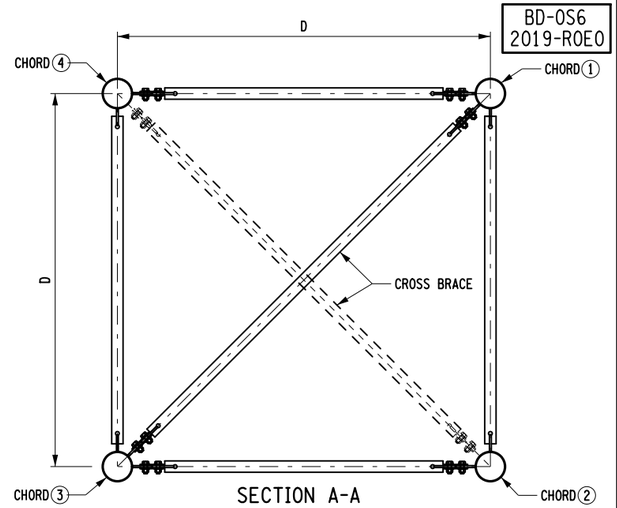

SECTION A-A

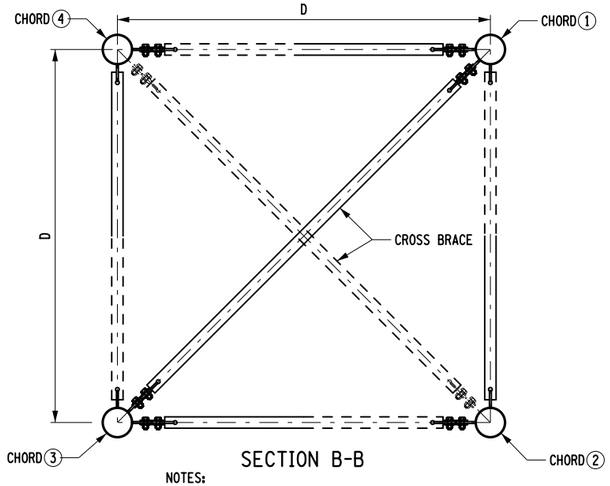

SECTION B-B

NOTES:

1. THE CROSS BRACING SHALL BRACE THE TRUSS CHORD MIDWAY BETWEEN HORIZONTAL DIAGONAL CONNECTION POINTS, SO THAT EACH CHORD OF THE TRUSS IS BRACED HORIZONTALLY AT EACH PANEL POINT BY A HORIZONTAL DIAGONAL, A HORIZONTAL STRUT, OR A CROSS BRACE.
2. CAMBER SHALL BE OBTAINED BY INCREASING THE TOP CHORD LENGTHS AND DECREASING THE BOTTOM CHORD LENGTHS AS SHOWN. CHORD ENDS AND SPLICE PLATES SHALL BE PREPARED TO THE PROPER ANGLE BEFORE SPLICE PLATES ARE WELDED TO THE CHORDS.
3. FOR DETAILS 1 THRU 6, SEE BD-OS7.
4. FOR DETAIL OF CHORD WIRE INLET, SEE BD-OS1.
5. FOR CHORD CAP DETAIL, SEE BD-OS13.
6. BOLT HOLES FOR CHORD SPLICES SHALL BE ⅛" LARGER THAN BOLT DIAMETER.
7. WEEP HOLES SHALL BE ⅜" DIAMETER DRILLED HOLES AT CENTERLINE OF BOTH TOP AND BOTTOM CHORDS.

REVISED

ERRATA

NEW YORK STATE OF OPPORTUNITY.

Department of Transportation
Office of Structures

OVERHEAD SIGN STRUCTURES
SPAN STRUCTURES
TRUSS DETAILS SHEET 1 OF 2

APPROVED: 02/25/19
ORIGINAL SIGNED BY
RICHARD MARCHIONE, P.E.
DEPUTY CHIEF ENGINEER
(STRUCTURES)

ORIGINAL ISSUED UNDER EB 08-002

CURRENT ISSUED UNDER EB 19-012
EFFECTIVE WITH THE
LETTING OF 02/25/19

FILE NAME = BD-OS6.2019-R0E0.dgn
DATE/TIME = 25-FEB-2019 15:07

BD-OS7
2019-ROE0

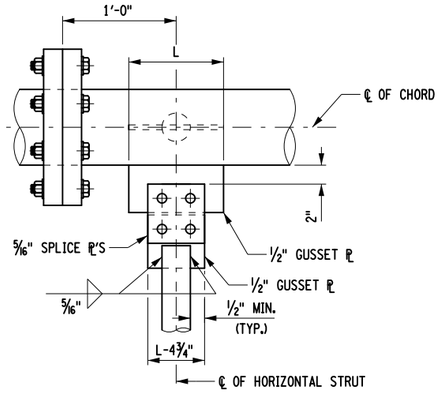

DETAIL 1
(TOP)

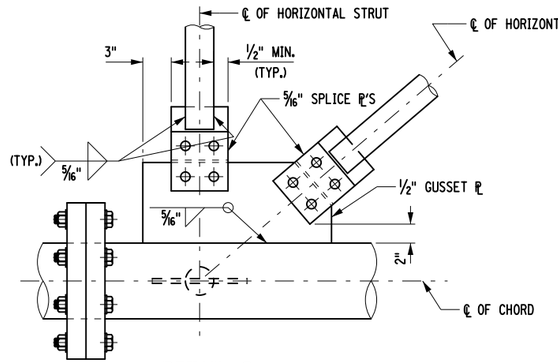

DETAIL 2
(TOP)

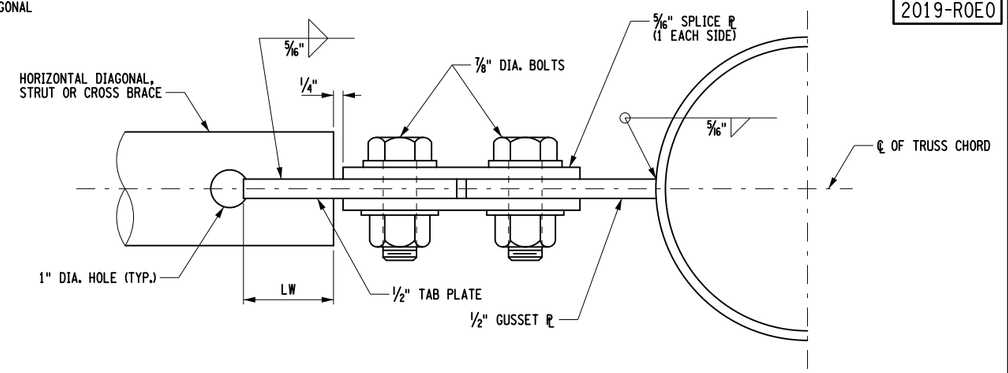

SPLIT TUBE BOLTED CONNECTION DETAIL
(TYPICAL FOR ALL BOLTED TRUSS CONNECTIONS)

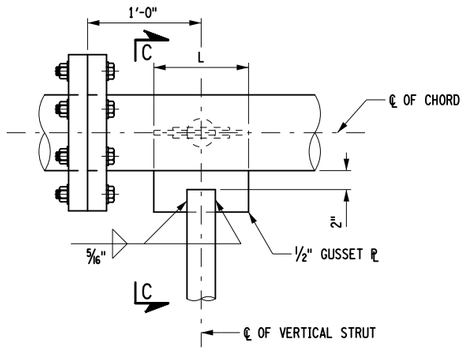

DETAIL 3
(FRONT)

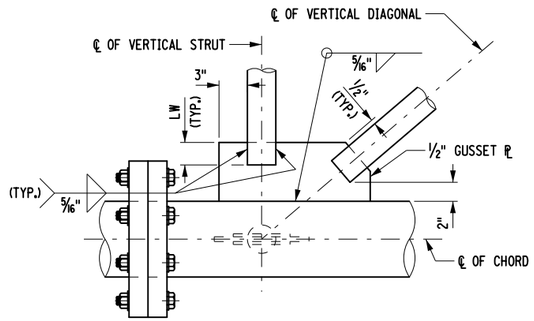

DETAIL 4
(FRONT)

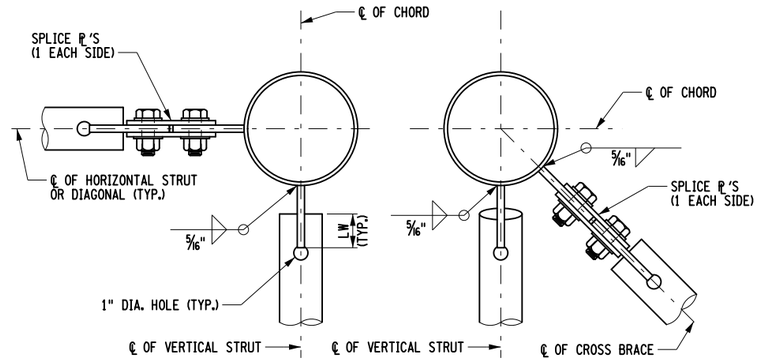

SECTION C-C SECTION E-E

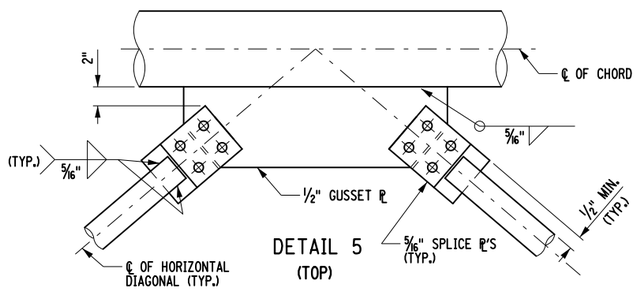

DETAIL 5
(TOP)

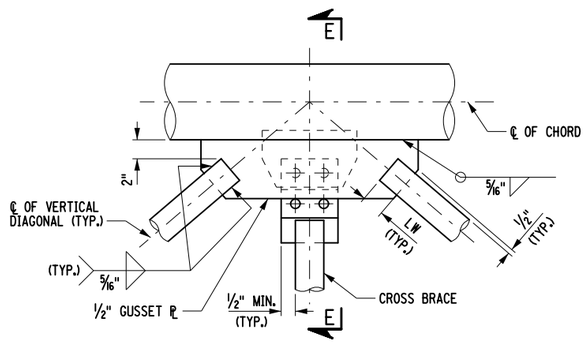

DETAIL 6
(FRONT)

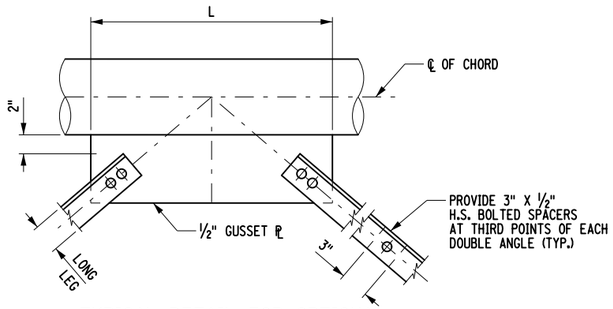

TYPICAL DETAIL FOR OPTIONAL
DOUBLE ANGLES AT HORIZONTAL
DIAGONALS, STRUTS AND CROSS BRACES
(FOR MINIMUM L AT STRUT, SEE
DIAGONAL/STRUT AND CROSS BRACE TABLE)

HORIZONTAL DIAGONALS, STRUTS AND CROSS BRACES	
SPLIT TUBE (NPS)	OPTIONAL DOUBLE ANGLE
2.5 STD.	2 L 3"x 2"x 3/8"
3 STD.	2 L 3"x 2 1/2"x 3/8"
4 STD.	2 L 4"x 3"x 3/8"
5 STD.	2 L 6"x 4"x 3/8"

DIAGONAL/STRUT AND CROSS BRACE TABLE		
MEMBER SIZE (NPS)	L (MIN.)	LW (MIN.)
2.5 STD.	10"	2 3/8"
3 STD.	10"	2 3/8"
4 STD.	1'-0 3/8"	3 1/8"
5 STD.	1'-2 1/8"	4"

NOTES:

1. ALL BOLTED CONNECTIONS SHALL BE MADE WITH 7/8" DIA. HIGH STRENGTH BOLTS FULLY TIGHTENED. HOLES IN GUSSET AND TAB PLATES SHALL BE STANDARD. HOLES IN BOLTED CONNECTION SPLICE PLATES OR DOUBLE ANGLES MAY BE OVERSIZE. WHERE BOLTS ARE INSTALLED VERTICALLY (OR SEMI-VERTICALLY) THE BOLT SHALL BE INSTALLED WITH THE BOLT HEAD UP.
2. FOR LOCATIONS OF DETAILS, SEE BD-OS6.
3. ALL VERTICAL TRUSS CONNECTIONS SHALL BE WELDED. DOUBLE ANGLES MAY NOT BE SUBSTITUTED FOR VERTICAL TRUSS MEMBERS.
4. FULLY WELDED SPLIT TUBES MAY BE USED IN LIEU OF THE BOLTED CONNECTIONS SHOWN IN DETAILS 4, 5 AND 6, IF GALVANIZING TANKS PERMIT.
5. DETAIL 4 MAY BE SUBSTITUTED FOR DETAIL 1 AT THE FABRICATOR'S DISCRETION.

REVISED	NEW YORK STATE OF OPPORTUNITY.	Department of Transportation Office of Structures
	OVERHEAD SIGN STRUCTURES SPAN STRUCTURES TRUSS DETAILS SHEET 2 OF 2	
ERRATA	APPROVED: 02/25/19 ORIGINAL SIGNED BY RICHARD MARCHIONE, P.E. DEPUTY CHIEF ENGINEER (STRUCTURES)	ORIGINAL ISSUED UNDER EB 08-002 CURRENT ISSUED UNDER EB 19-012 EFFECTIVE WITH THE LETTING OF 02/25/19

FILE NAME = BD-OS7_2019-R0E0.dgn
DATE/TIME = 25-FEB-2019 15:08

BD-0S13
2019-R0E0

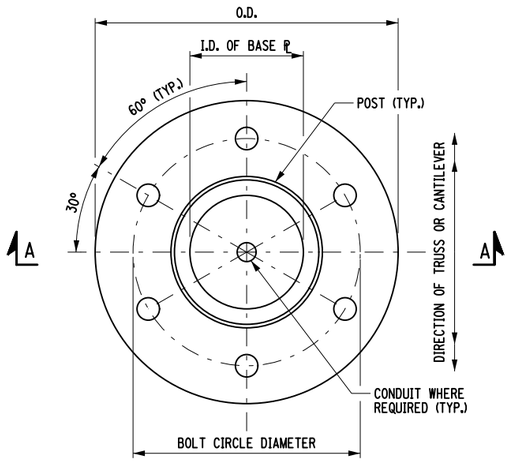

BASE PLATE DETAIL
6 BOLT ARRANGEMENT

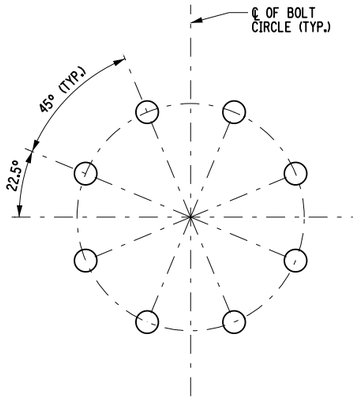

BOLT CIRCLE DETAIL
8 BOLT ARRANGEMENT

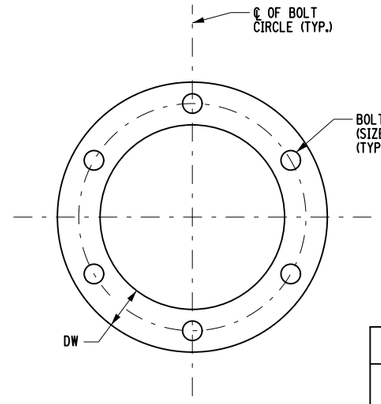

TYPICAL TEMPLATE DETAIL
6 BOLT ARRANGEMENT SHOWN
(8 BOLT AS NECESSARY)

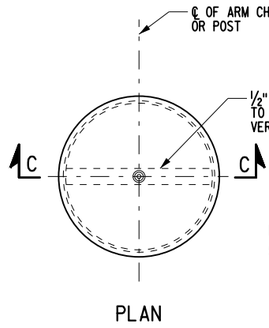

PLAN

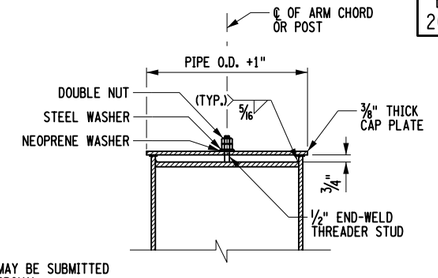

NOTE:
ALTERNATE CAP DETAILS MAY BE SUBMITTED TO THE ENGINEER FOR APPROVAL.

SECTION C-C

CAP DETAILS

BASE PLATE TABLE							
BASE PLATE TYPE	POST (NPS)	PLATE O.D.	PLATE T	PLATE BOLT CIRCLE DIA.	ANCHOR BOLTS NO.	ANCHOR BOLTS SIZE DIA.	HOLE DIA.
BP-10	10	2′-2¾"	2⅜"	1′-6¾"	6	1½"	1⅞"
BP-12	12	2′-4½"	2⅜"	1′-8½"	6	1¾"	2⅛"
BP-14	14	2′-6"	2⅜"	1′-10"	6	1¾"	2⅛"
BP-16	16	2′-8"	2¾"	2′-0"	6	2"	2⅜"
BP-18	18	2′-10"	2¾"	2′-2"	6	2¼"	2⅝"
BP-20	20	3′-0"	2¾"	2′-4"	6	2¼"	2⅝"
BP-24	24	3′-2"	2¾"	2′-8"	6	2½"	2⅞"
BP-26	26	3′-4"	2¾"	2′-10"	6	2½"	2⅞"
BP-30	30	3′-10½"	2¾"	3′-2½"	6	2½"	2⅞"
BP-36	36	4′-7⅛"	2¾"	3′-11⅛"	8	2½"	2⅞"

ANCHOR BOLT TABLE (ITEM 644.11)						
BOLT SIZE	Ld MIN. EMBED.	J EXPOSED LENGTH	TEMPLATE DATA DW	TEMPLATE DATA TW	TEMPLATE DATA HOLE DIA.	BOLT WEIGHT (BOLT ONLY) (lbs.)
1½"	2′-5"	9½"	3½"	¾"	1⅜"	18.1
1¾"	2′-9"	10½"	4"	⅞"	1 13/16"	28.4
2"	3′-2"	1′-0"	4½"	1"	2 1/16"	42.5
2¼"	3′-8"	1′-1½"	5"	1⅛"	2⅜"	66.8
2½"	4′-3"	1′-2¾"	6"	1¼"	2¾"	98.9

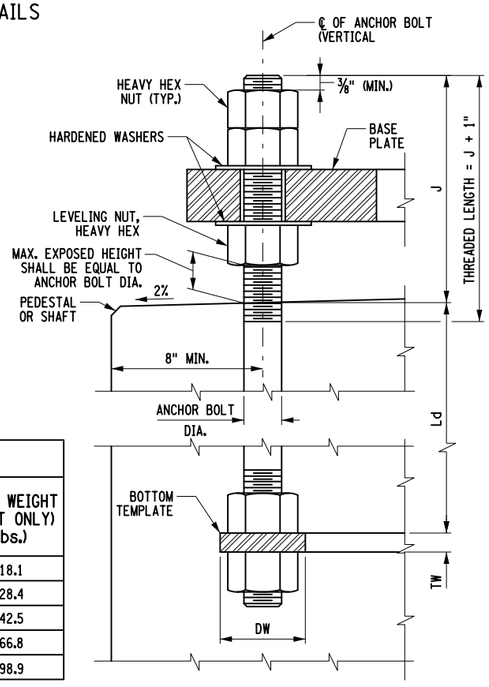

ANCHOR BOLT DETAIL

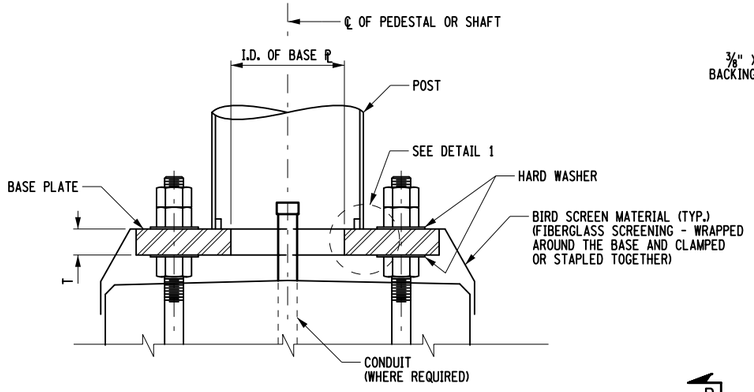

SECTION A-A

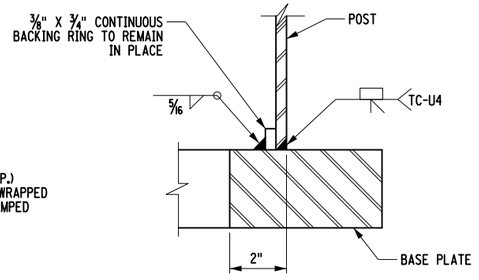

DETAIL 1

HANDHOLE TABLE		
PIPE WALL THICKNESS	a REINFORCEMENT THICKNESS (MIN.)	b WELD SIZE
LESS THAN ½"	½"	⅜"
½" TO ⅝"	⅝"	½"

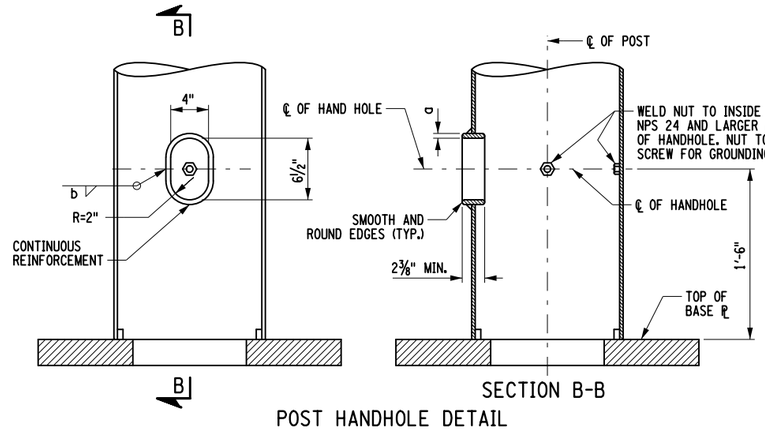

SECTION B-B

POST HANDHOLE DETAIL

COVER

DETAILS OF THE COVER TO BE DETERMINED BY THE FABRICATOR TO FIT TIGHTLY, EXCLUDE WATER, AND BE REMOVABLE WITH A WRENCH. ALL FASTENERS, NUTS, AND WASHERS SHALL BE STAINLESS STEEL.

NOTES:

1. ANCHOR BOLTS, NUTS, WASHERS AND TEMPLATES SHALL BE GALVANIZED.
2. FOR TEMPLATE REQUIREMENT, SEE SPECIFICATIONS.
3. TOP TEMPLATE SHALL BE REMOVED PRIOR TO THE INSTALLATION OF THE BASE PLATE.
4. S.I.N. AND CONTRACT NO. SHALL BE STAMPED ON BASE PLATE, SEE SPECIFICATIONS.

REVISED

ERRATA

NEW YORK STATE OF OPPORTUNITY.
Department of Transportation
Office of Structures

OVERHEAD SIGN STRUCTURE
TYPICAL BASE AND CAP DETAILS

APPROVED: 02/25/19
ORIGINAL SIGNED BY
RICHARD MARCHIONE, P.E.
DEPUTY CHIEF ENGINEER
(STRUCTURES)

ORIGINAL ISSUED UNDER EB 08-002

CURRENT ISSUED UNDER EB 19-012
EFFECTIVE WITH THE
LETTING OF 02/25/19

FILE NAME = BD-0S13_2019-R0E0.dgn
DATE/TIME = 25-FEB-2019 15:08

BD-OS14
2019-R0E0

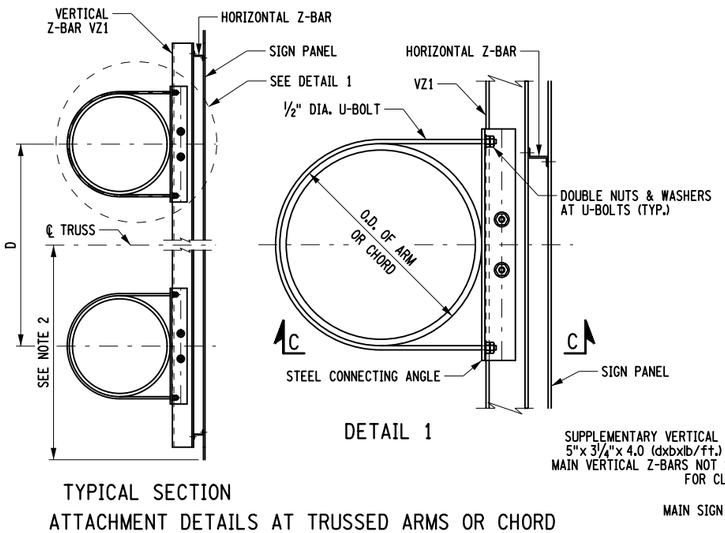

TYPICAL SECTION

DETAIL 1

ATTACHMENT DETAILS AT TRUSSED ARMS OR CHORD

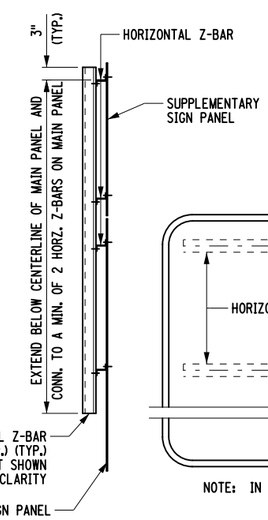

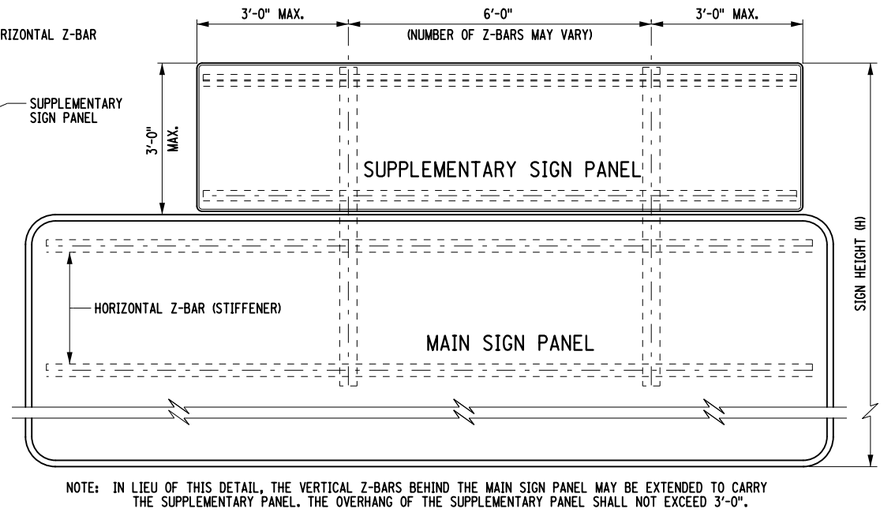

NOTE: IN LIEU OF THIS DETAIL, THE VERTICAL Z-BARS BEHIND THE MAIN SIGN PANEL MAY BE EXTENDED TO CARRY THE SUPPLEMENTARY PANEL. THE OVERHANG OF THE SUPPLEMENTARY PANEL SHALL NOT EXCEED 3'-0".

SUPPLEMENTARY SIGN PANEL MOUNTING DETAILS

(MAIN SIGN PANEL VERTICAL Z-BARS AND ADDITIONAL HORIZONTAL Z-BARS NOT SHOWN)

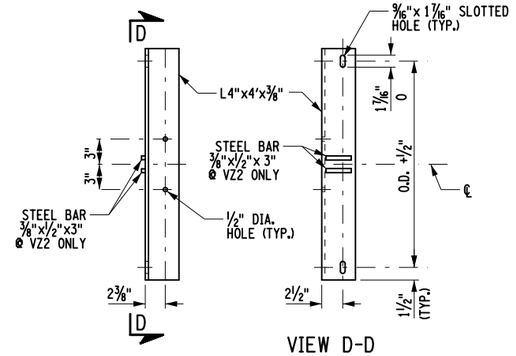

VIEW D-D

STEEL CONNECTION ANGLE

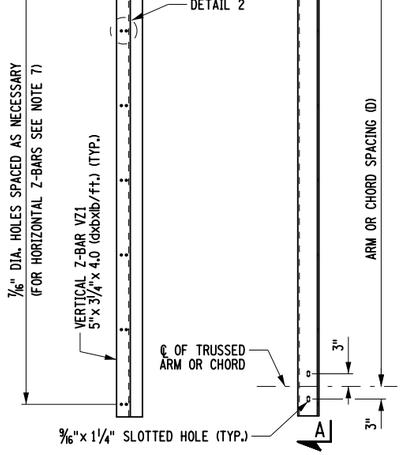

VIEW A-A ELEVATION

DETAIL OF VERTICAL Z-BAR VZ1

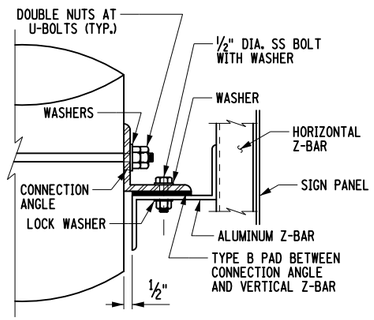

SECTION C-C

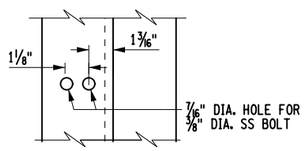

DETAIL 2

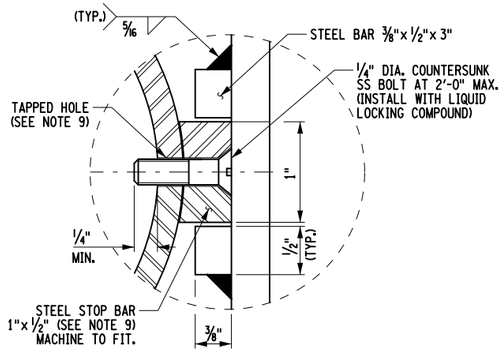

DETAIL 4

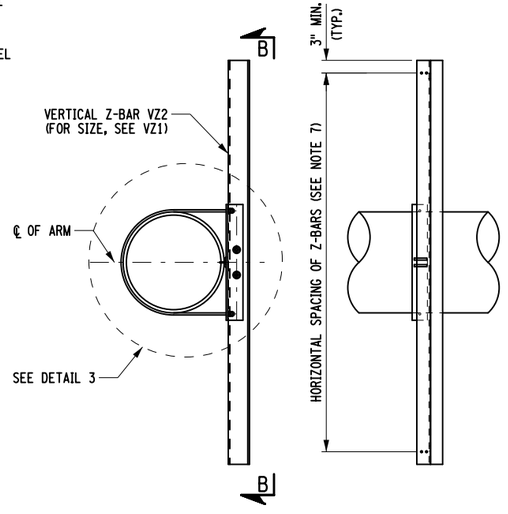

TYPICAL SECTION VIEW B-B

AT SINGLE ARM CANTILEVERS-VZ2
ATTACHMENT DETAILS

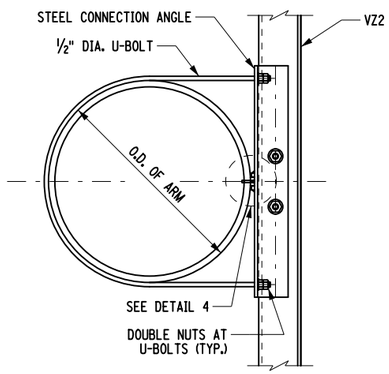

DETAIL 3

NOTES:

1. Z-BARS SHALL BE NON-WELDED ALUMINUM ALLOY 6061-T6.
2. MAIN AND SUPPLEMENTARY SIGN PANELS ON SINGLE ARM CANTILEVER STRUCTURES SHALL HAVE THE VERTICAL CENTROID OF THE TOTAL SIGN AREA AT THE VERTICAL CENTERLINE OF THE ARM.
3. EACH SET OF MAIN AND SUPPLEMENTARY SIGN PANELS ON SPAN OR TRUSSED-ARM CANTILEVER STRUCTURES SHALL HAVE THE MAIN PANEL VERTICALLY CENTERED ON THE TRUSS. IF THE COMBINED VERTICAL CENTROID OF THE MAIN AND SUPPLEMENTARY SIGN PANELS IS GREATER THAN 9½" AWAY FROM THE VERTICAL CENTROID OF THE MAIN PANEL ALONE, THEN THE COMBINED VERTICAL CENTROID SHALL BE CENTERED ON THE TRUSS.
4. STEEL BARS AND STEEL CONNECTION ANGLES SHALL BE GALVANIZED.
5. ALL STAINLESS STEEL BOLTING MATERIAL SHALL BE ASTM A193, GRADE B8.
6. THERE SHALL BE A MINIMUM OF TWO VERTICAL Z-BARS PER SIGN. SPACING SHALL BE 6'-0" MAXIMUM. END VERTICAL Z-BARS SHALL BE NO MORE THAN 3'-0" FROM THE EDGE OF THE SIGN PANEL. VERTICAL Z-BARS SHALL BE ARRANGED TO AVOID INTERFERENCE WITH CHORD GUSSET PLATES OR WITH CHORD SPLICES. IF INTERFERENCE CANNOT BE RESOLVED BY RESPACING VERTICAL Z-BARS, THE SIGN PANEL MAY BE RELOCATED BY AS MUCH AS 6" FROM ITS ORIGINALLY DESIGNATED LOCATION.
7. SPACING OF SIGN PANEL HORIZONTAL Z-BAR STIFFENERS SHALL BE AS SHOWN ON THE CURRENT SIGN PANEL STANDARD SHEET.
8. A LOCK WASHER SHALL BE USED UNDER EACH NUT FOR NON-COUNTERSUNK STAINLESS STEEL BOLTS. IN LIEU OF THE LOCK WASHER, AN APPROVED STOP NUT MAY BE USED. LOCK WASHERS SHALL NOT BE USED AT A SLOTTED HOLE. A FLAT WASHER SHALL BE USED UNDER EACH BOLT HEAD.
9. SIGN PANEL, HORIZONTAL AND VERTICAL Z-BARS AND FASTENING ASSEMBLIES FOR ATTACHING SIGNS TO STRUCTURE SHALL BE PAID UNDER THE OVERHEAD SIGN PANEL ITEM 645.
10. TAP HOLES IN SINGLE ARM CANTILEVER PRIOR TO GALVANIZING. INSTALL STEEL STOP BAR AFTER GALVANIZING. SEE BD-OS8 FOR LENGTH OF BOLTED STEEL STOP BAR.

REVISED	NEW YORK STATE OF OPPORTUNITY.	Department of Transportation Office of Structures
	OVERHEAD SIGN STRUCTURES SIGN PANEL ATTACHMENT DETAILS	
ERRATA	APPROVED: 02/25/19 ORIGINAL SIGNED BY RICHARD MARCHIONE, P.E. DEPUTY CHIEF ENGINEER (STRUCTURES)	ORIGINAL ISSUED UNDER EB 08-002 CURRENT ISSUED UNDER EB 19-012 EFFECTIVE WITH THE LETTING OF 02/25/19

FILE NAME = BD-OS14_2019-R0E0.dgn
DATE/TIME = 25-FEB-2019 15:08

BD-0S15
2020-R0E0

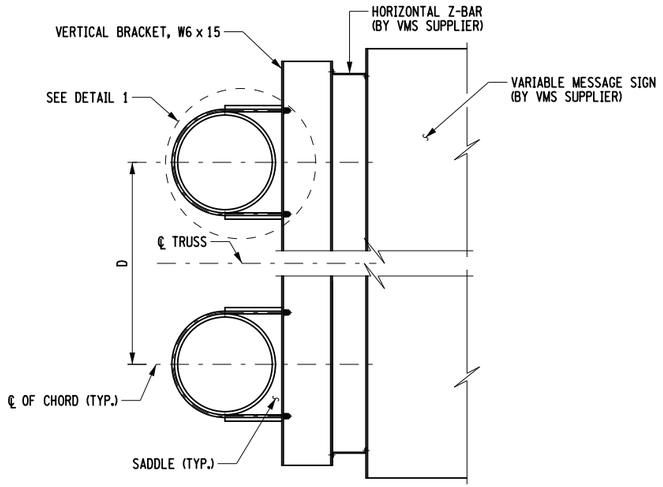

TYPICAL SECTION
(ATTACHMENT DETAIL AT CHORD)

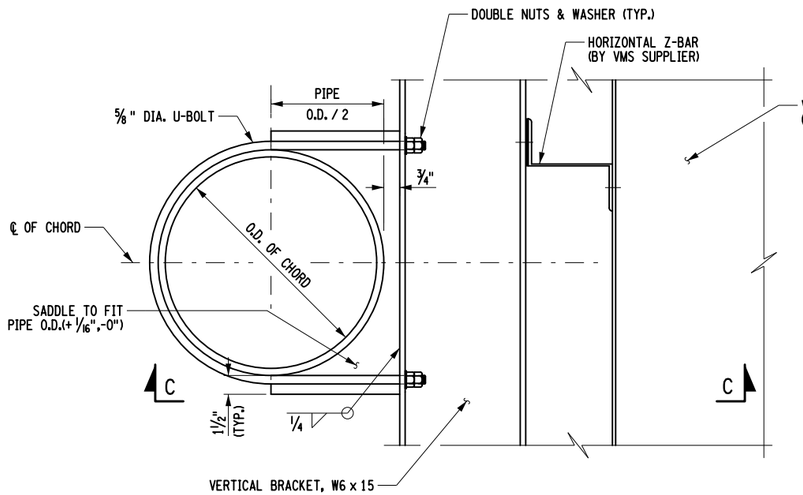

DETAIL 1

FABRICATION NOTES:

1. VARIABLE MESSAGE SIGN (VMS) SHALL BE CENTERED VERTICALLY ON THE TRUSS.
2. STEEL MEMBERS AND FASTENERS SHALL BE GALVANIZED, UNLESS OTHERWISE NOTED.
3. MATERIALS:
   - STEEL SHAPES AND SADDLE SHALL BE ASTM A572 OR EQUAL.
   - ALL STAINLESS STEEL BOLTING MATERIAL SHALL BE ASTM A193, GRADE B8.
   - U-BOLTS SHALL BE ASTM F1554, GRADE 36.
   - ALL GALVANIZED BOLTS, NUTS AND WASHERS SHALL CONFORM TO NYSDOT STANDARD SPECIFICATION 715-14.
   - TYPE "B" PAD SHALL BE RUBBER IMPREGNATED RANDOM FIBER CONFORMING TO NYSDOT STANDARD SPECIFICATION 728-02.
4. THERE SHALL BE A MINIMUM OF TWO VERTICAL W6 x 15 BRACKETS PER VARIABLE MESSAGE SIGN. SPACING SHALL BE 6'-0" MAXIMUM. END VERTICAl W6 x 15 BRACKETS SHALL BE NO MORE THAN 3'-0" FROM THE EDGE OF THE VARIABLE MESSAGE SIGN. VERTICAL W6 x 15 BRACKETS SHALL BE ARRANGED TO AVOID INTERFERENCE WITH CHORD GUSSET PLATES OR WITH CHORD SPLICES. IF INTERFERENCE CANNOT BE RESOLVED BY RESPACING VERTICAL W6 x 15 BRACKETS, THE VARIABLE MESSAGE SIGN MAY BE RELOCATED BY AS MUCH AS 6" FROM ITS ORIGINALLY DESIGNATED LOCATION.
5. SPACING OF VARIABLE MESSAGE SIGN HORIZONTAL Z-BAR STIFFENERS SHALL BE AS SHOWN ON THE VARIABLE MESSAGE SIGN SUPPLIED SHEET.
6. FOR VMS ATTACHED TO NEW SIGN STRUCTURES, INCLUDE THE COST OF THE ATTACHMENT BRACKET AND FASTENING HARDWARE IN THE UNIT PRICE BID FOR OVERHEAD SIGN STRUCTURE.
7. THERE SHALL BE NO MODIFICATIONS OF THE SIGN STRUCTURE MEMBERS FOR THE MOUNTING OF UTILITY CONDUITS.

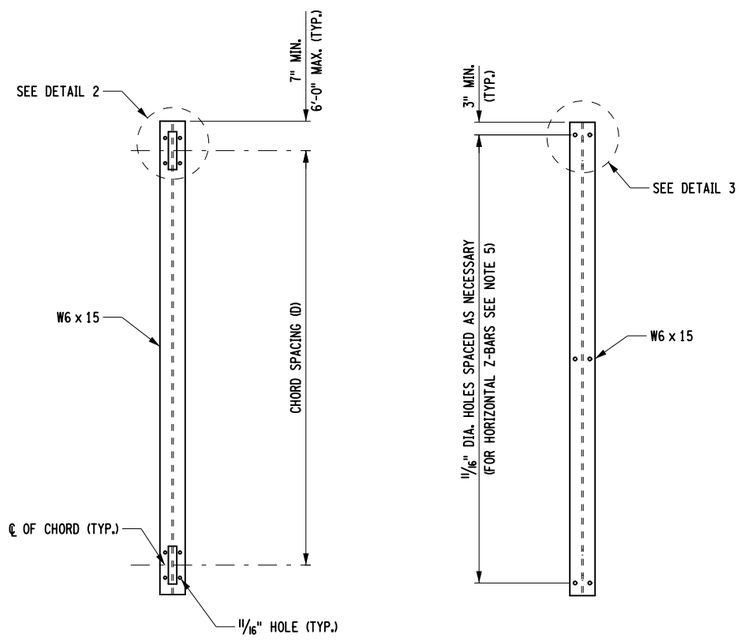

FLANGE AT OSS

FLANGE AT VMS

DETAIL OF VERTICAL BRACKET

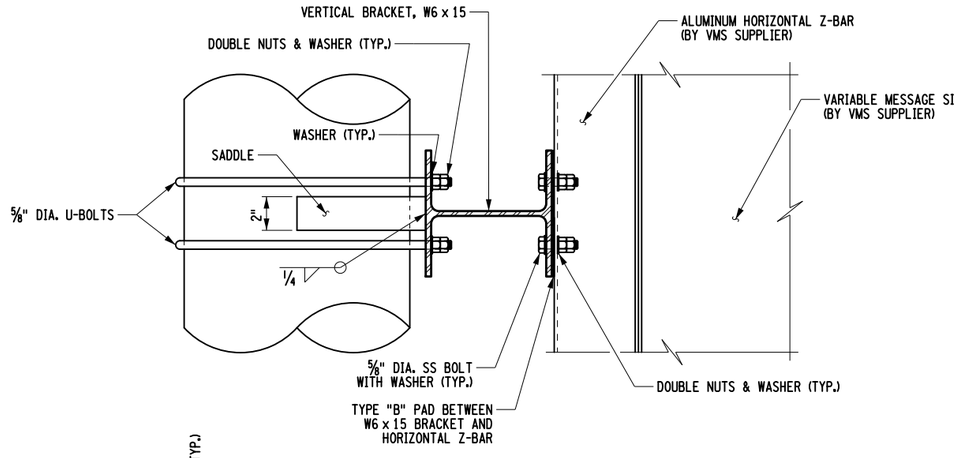

SECTION C-C

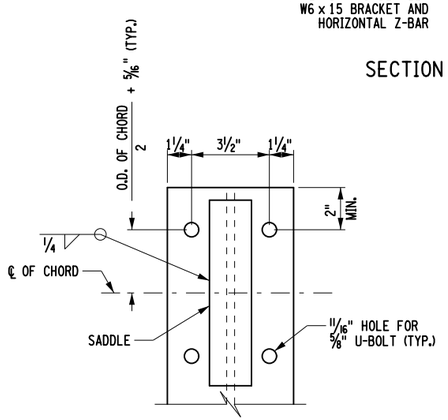

DETAIL 2

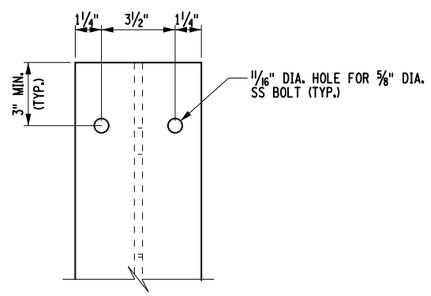

DETAIL 3

DESIGNER NOTES:

1. THE DESIGN OF THE VMS TO OSS ATTACHMENT, (VERTICAL BRACKETS, OSS FASTENING U-BOLTS, AND VMS FASTENING HARDWARE) IS BASED ON THE AASHTO 2015 LRFD SPECIFICATIONS FOR STRUCTURAL SUPPORTS FOR HIGHWAY SIGNS, LUMINAIRES, AND TRAFFIC SIGNALS, USING THE FOLLOWING CRITERIA:
   - 150 MPH WIND LOAD, LOCATED ≤ 33' ABOVE NATURAL GRADE.
   - 1,000 LB. LIVE LOAD
2. ATTACHMENT DETAILS ON THIS DRAWING ARE DESIGNED BASED ON A COMMONLY USED, LARGE, COMMERCIALLY AVAILABLE VARIABLE MESSAGE SIGN WITH THE FOLLOWING PARAMETERS:
   - 32'L x 8'-6"H x 4'D
   - 5,000 LBS.
3. IF THE PARAMETERS OF NOTES 1 OR 2 ARE EXCEEDED, ADDITIONAL ANALYSIS IS REQUIRED.
4. OVERHEAD SIGN STRUCTURES (NEW OR EXISTING) SHALL BE FULLY ANALYZED FOR THE LOADS IMPARTED BY THE VMS.

REVISED	NEW YORK STATE OF OPPORTUNITY.	Department of Transportation Office of Structures
	OVERHEAD SIGN STRUCTURES VARIABLE MESSAGE SIGN ATTACHMENT DETAILS	
ERRATA	APPROVED: 03/17/2020 ORIGINAL SIGNED BY JAMES H. FLYNN III, P.E. DEPUTY CHIEF ENGINEER (STRUCTURES)	ORIGINAL ISSUED UNDER EB 20-019 CURRENT ISSUED UNDER EB 20-019 EFFECTIVE WITH THE LETTING OF 03/17/2020

FILE NAME = BD-0S15_2020-R0E0.dgn
DATE/TIME = 18-MAR-2020 12:00

GANTRY CABINET
REFERENCE DRAWINGS
(TO BE DUPLICATED)

Fiber Cabinets

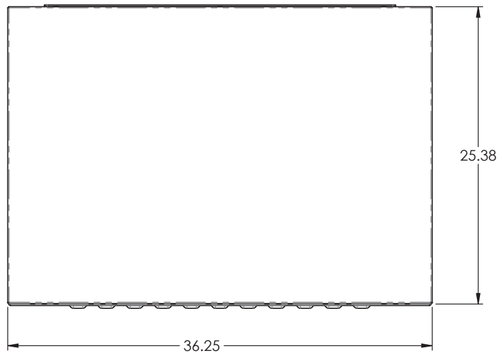

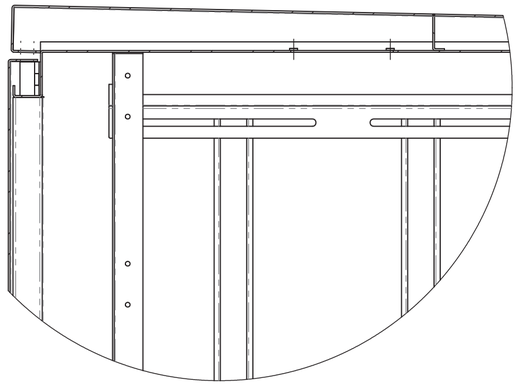

DETAIL A
SCALE 1 : 5

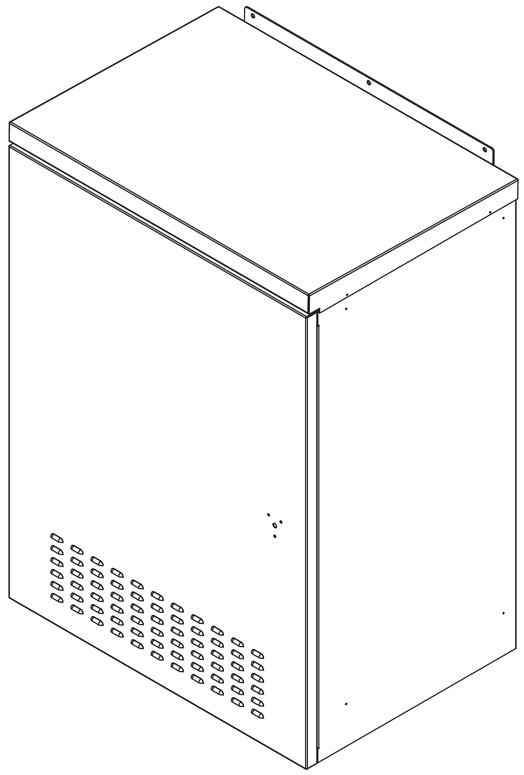

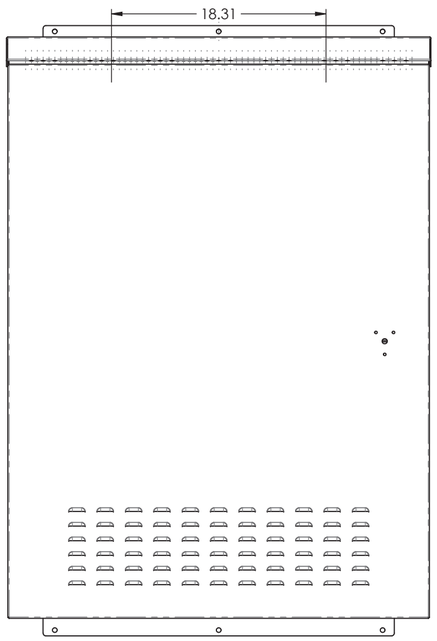

SECTION B-B

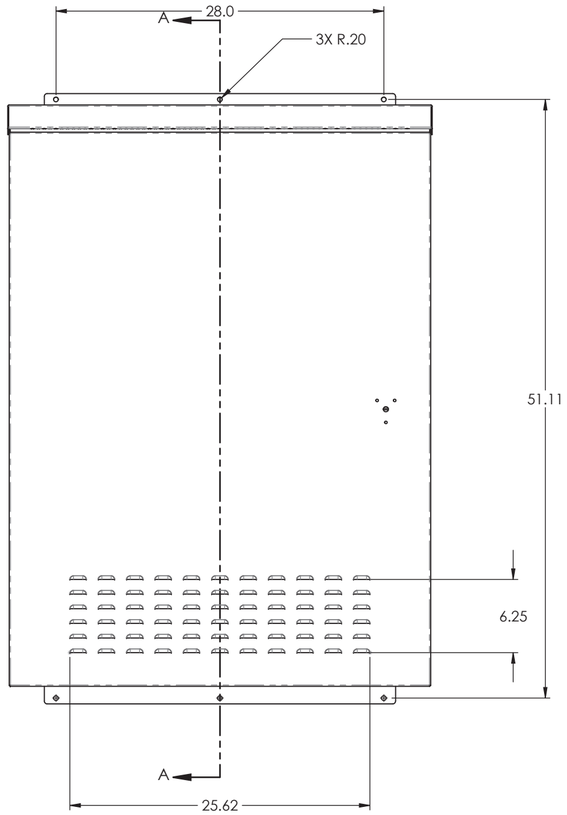

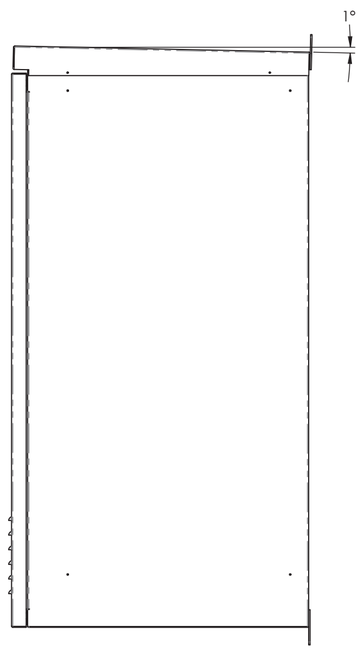

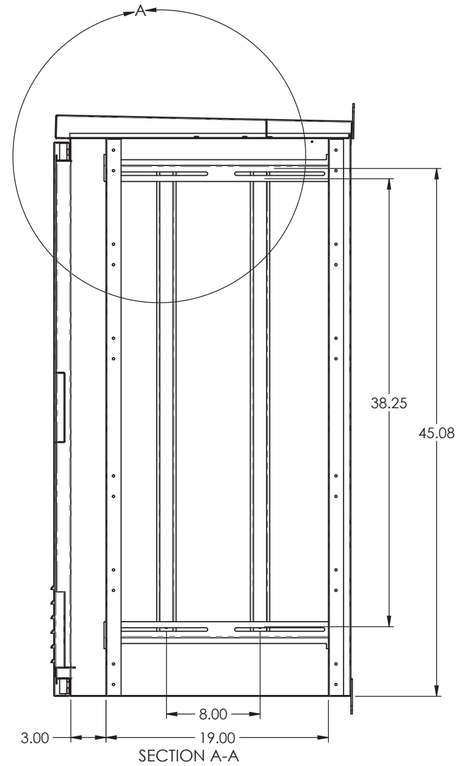

SECTION A-A

REVISION		NAME	DATE	DEMA INDUSTRIES LIMITED	
	DRAWN		26/03/2018		
	CHECKED				
	ENG APPR.			TITLE: GANTRY CONTROL CABINET	REV
MATERIAL	UNSPECIFIED TOLERANCES (INCH)		PROJECTION		
FINISH	FRACTION ±1/32 1 PLACE DECIMAL ±.020 2 PLACE DECIMAL ±.010 3 PLACE DECIMAL ±.005 4 PLACE DECIMAL ±.001 ANGLES ±1°		THIRD ANGLE	SIZE C	DRAWING NO. DE2082
				SCALE 1 : 10	UNIT INCH SHEET 1 OF 24

REV
DE2082
C

ITEM NO.	PART NUMBER	DESCRIPTION	QTY.
1	DE2082-01-01	CABINET HOUSING	1
2	DE2082-11	BOTTOM PLATE	1
3	DE2082-03	TOP ANGLE PLATE	1
4	DE2082-02	CABINET TOP COVER	1
5	DE2082-20	PARTITION	1
6	DE2082-14	EIA "L" SERIES	2
7	DE2082-14-1	EIA "L" SERIES	2
8	DE2082-16	MOUNTING TAB	2
9	DE2082-08	HINGE	1
10	DE2082-15	DOOR ASSEMBLY	1
11	DE2082-17	EIA SUPPORT BRACKET	4
12	DE2082-17-01	EIA SUPPORT BRACKET	4
13	FHS032-8	10-32 Thread, 1/2" Long	16
14	DE2082-06	UNI-STRUT	4
15	DE2082-18	UNISTRUT MOUNTING BRACKET	4

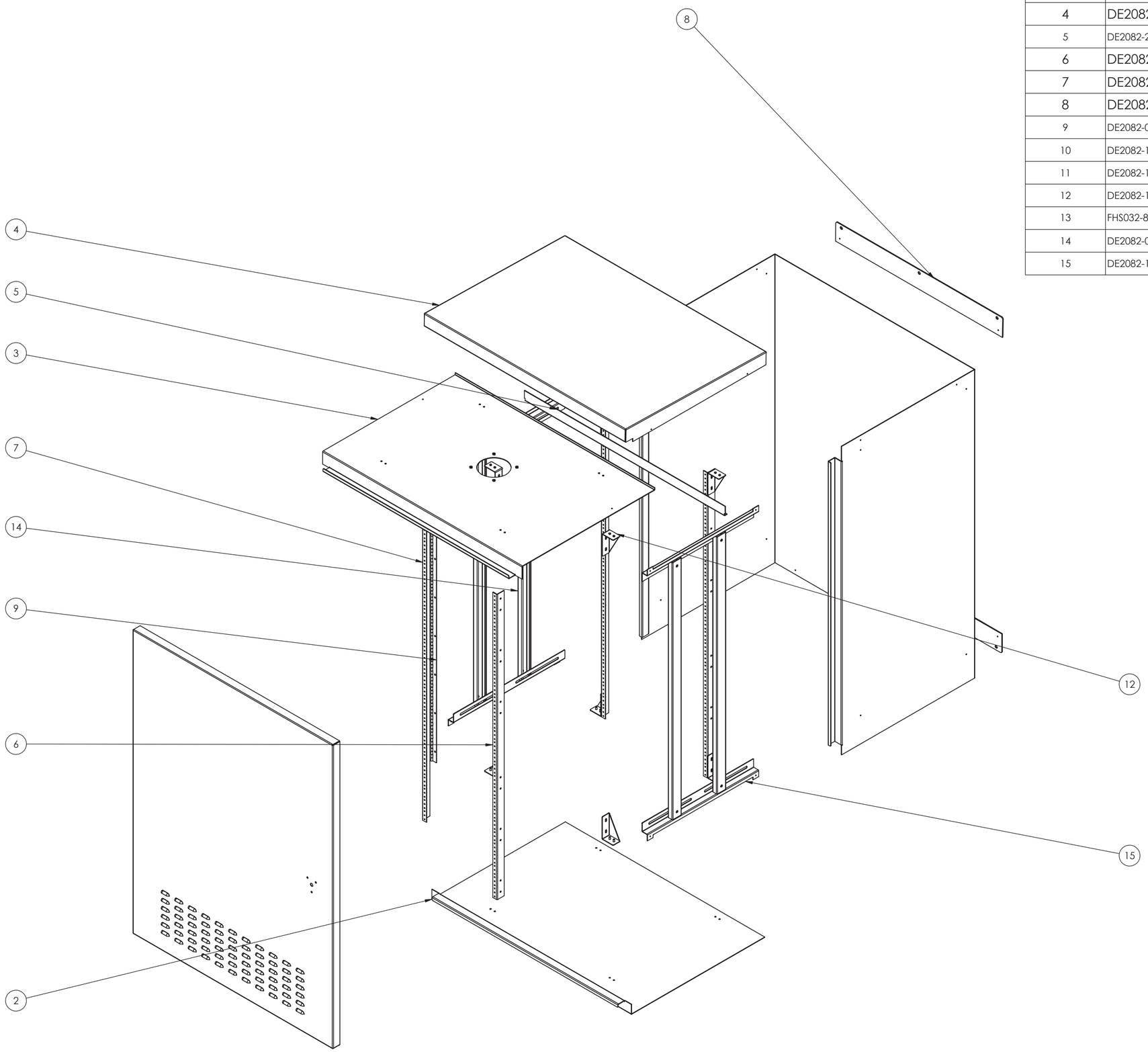

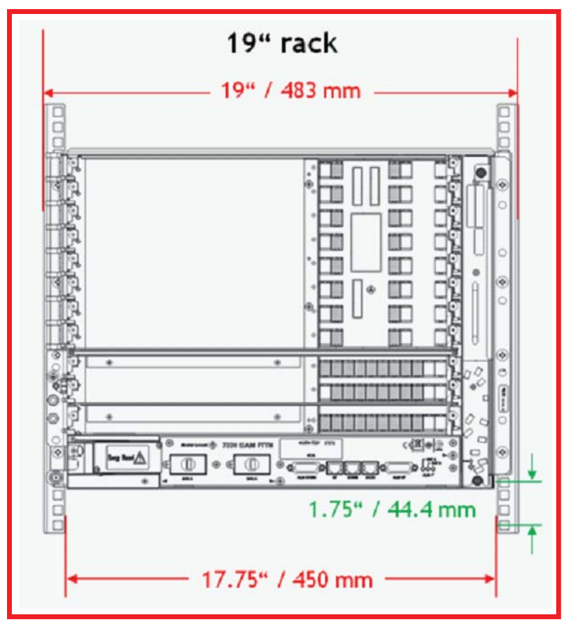

REVISION		NAME	DATE	
	DRAWN		26/03/2018	DEMA INDUSTRIES LIMITED
	CHECKED			
	ENG APPR.			TITLE: GANTRY CONTROL CABINET — REV
MATERIAL	UNSPECIFIED TOLERANCES (INCH)		PROJECTION	
FINISH	FRACTION ±1/32; 1 PLACE DECIMAL ±.020; 2 PLACE DECIMAL ±.010; 3 PLACE DECIMAL ±.005; 4 PLACE DECIMAL ±.001; ANGLES ±1°		THIRD ANGLE	SIZE C — DRAWING NO. DE2082
				SCALE 1 : 10 — UNIT INCH — SHEET 2 OF 24

REV
DE2082
C

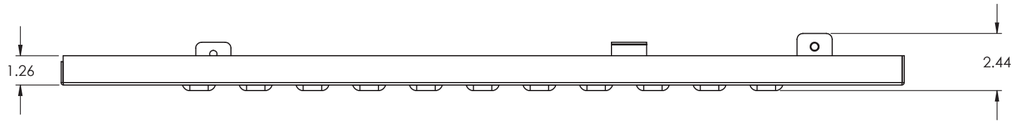

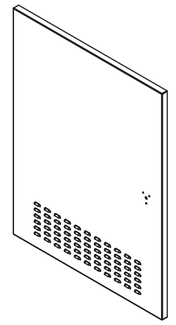

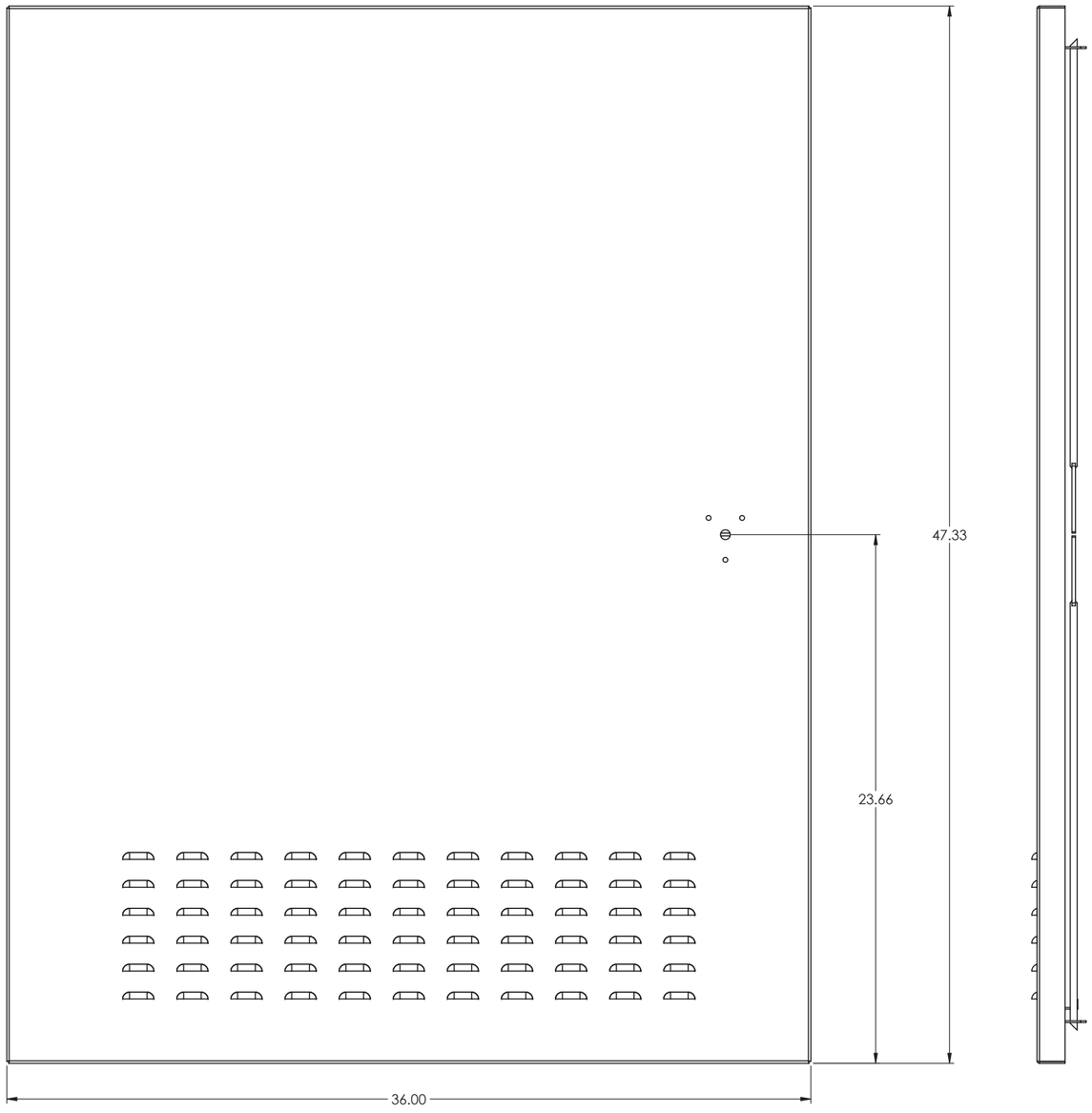

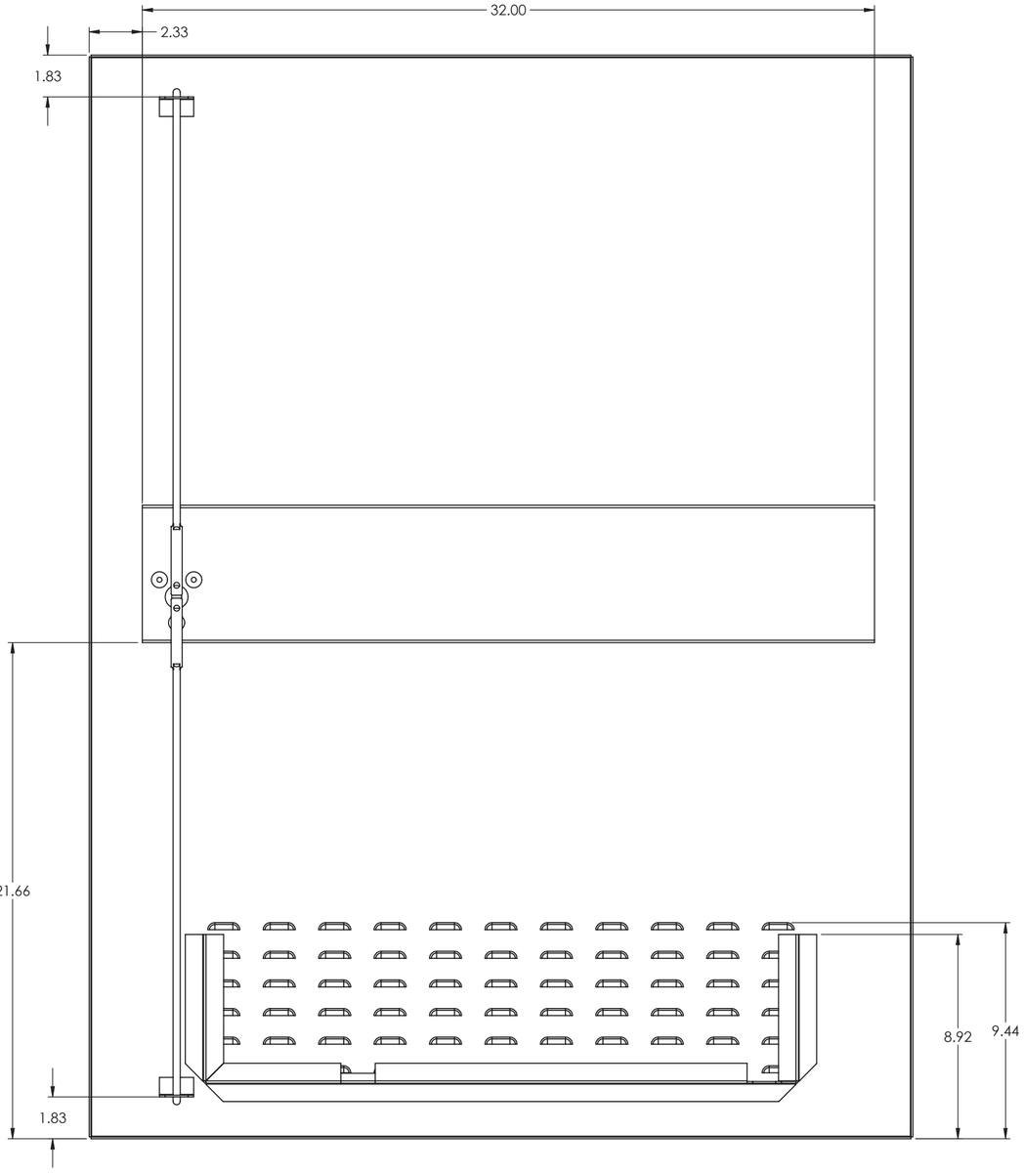

REVISION		NAME	DATE	DEMA INDUSTRIES LIMITED
	DRAWN		26/03/2018	
	CHECKED			
	ENG APPR.			TITLE: DOOR ASSEMBLY — REV
MATERIAL	UNSPECIFIED TOLERANCES (INCH)		PROJECTION	
FINISH	FRACTION ±1/32; 1 PLACE DECIMAL ±.020; 2 PLACE DECIMAL ±.010; 3 PLACE DECIMAL ±.005; 4 PLACE DECIMAL ±.001; ANGLES ±1°		THIRD ANGLE	SIZE C — DRAWING NO. DE2082-15
				SCALE 1 : 5 — UNIT INCH — SHEET 3 OF 24

REV
DE2082-15
C

ITEM NO.	PART NUMBER	DESCRIPTION	QTY.
1	DE2082-05	LOCK MECHANISM GUIDE	2
2	DE2082-09	DOOR LATCH ROD	2
3	DE2082-13-01	CABINET DOOR	1
4	DE2082-07-01	FRONT DOOR LOCK MOUNT PLATE ASSEM	1
5	DE2082-12-01	FILTER HOLDING BRACKET	1

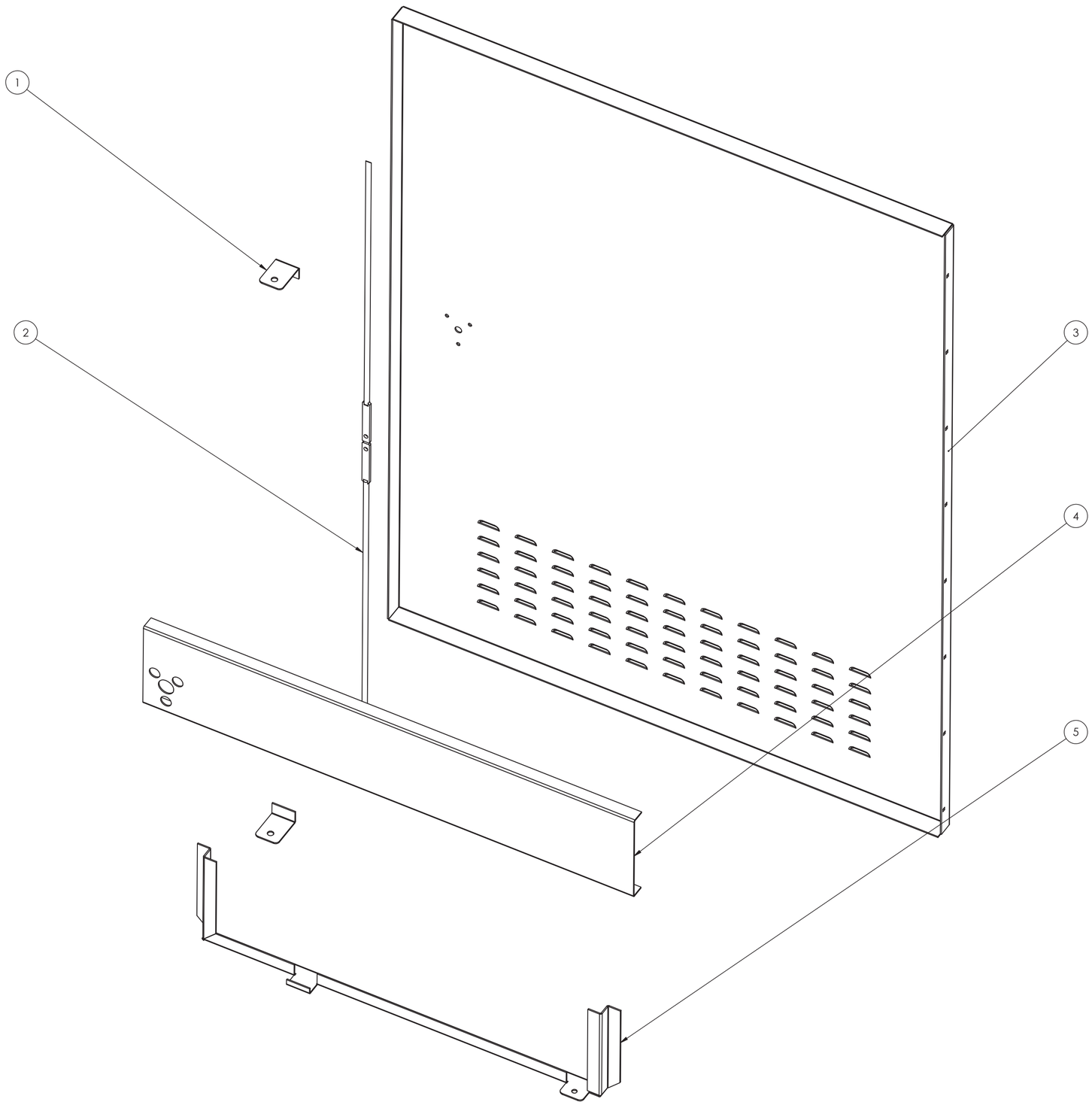

REVISION		NAME	DATE	DEMA INDUSTRIES LIMITED	
	DRAWN		26/03/2018		
	CHECKED				
	ENG APPR.			TITLE DE2082-15	REV
MATERIAL	UNSPECIFIED TOLERANCES (INCH)		PROJECTION		
FINISH	FRACTION ±1/32 1 PLACE DECIMAL ±.020 2 PLACE DECIMAL ±.010 3 PLACE DECIMAL ±.005 4 PLACE DECIMAL ±.001 ANGLES ±1°		THIRD ANGLE	SIZE C DRAWING NO. DOOR ASSEMBLY	
				SCALE 1 : 5 UNIT INCH SHEET 4 OF 24	

REV
DE2082-15
C

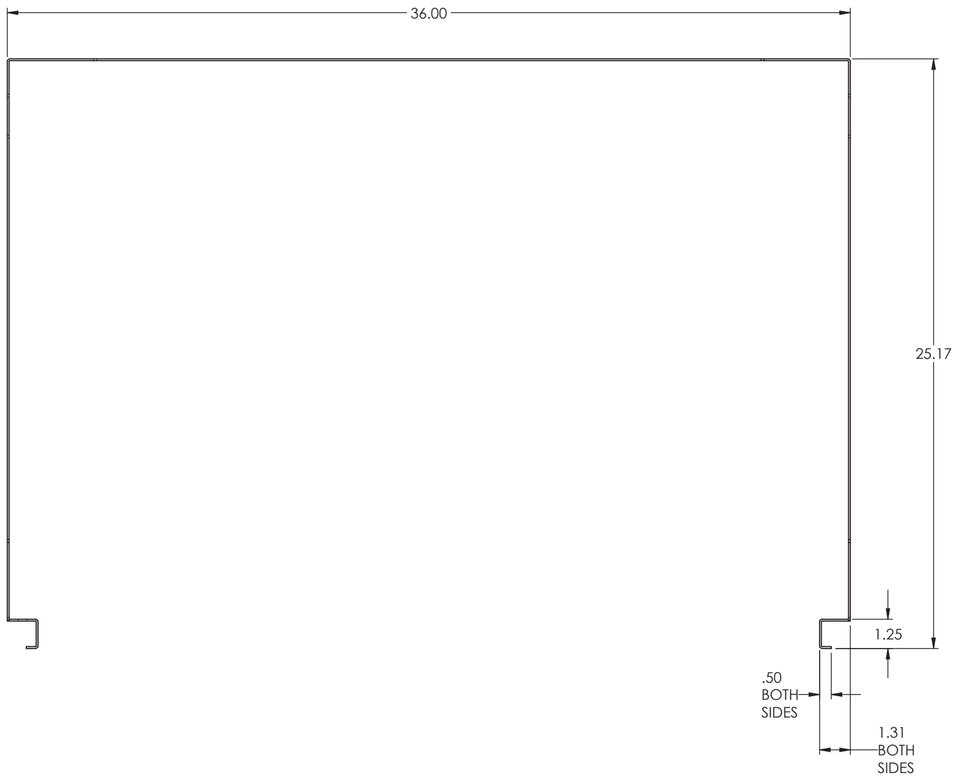

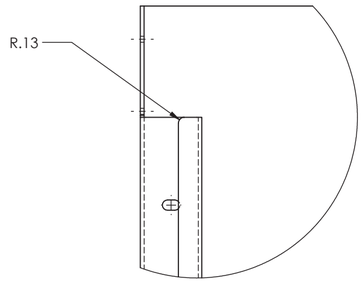

DETAIL L
SCALE 2 : 5

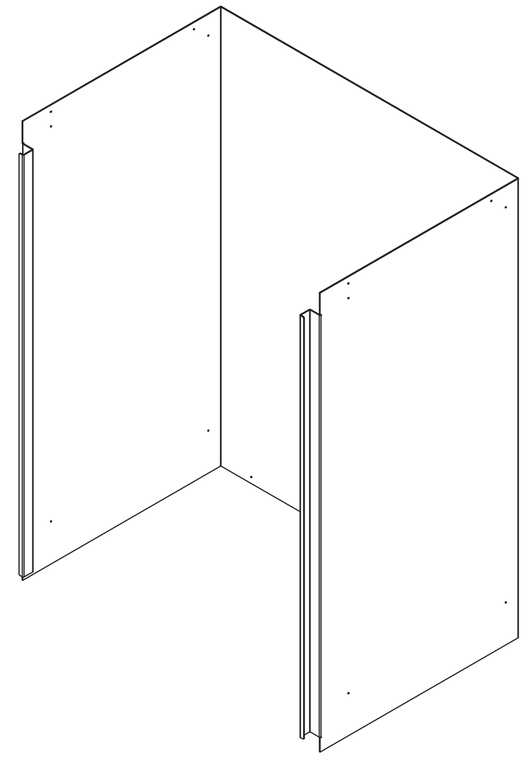

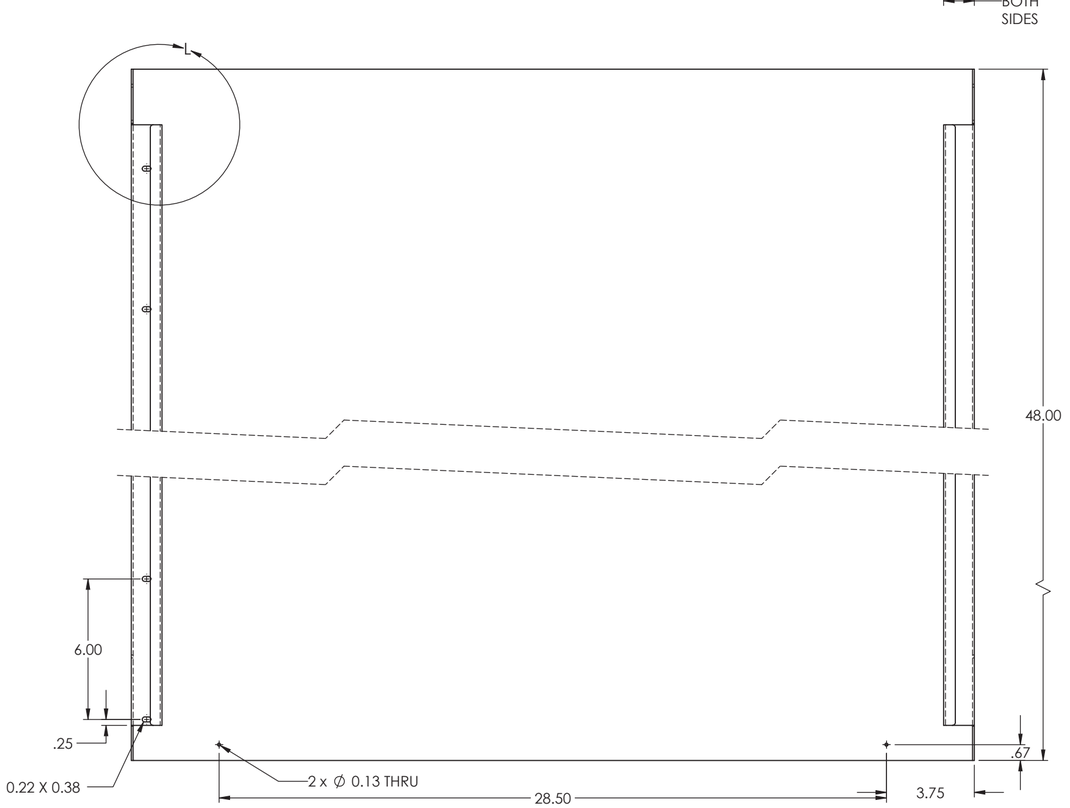

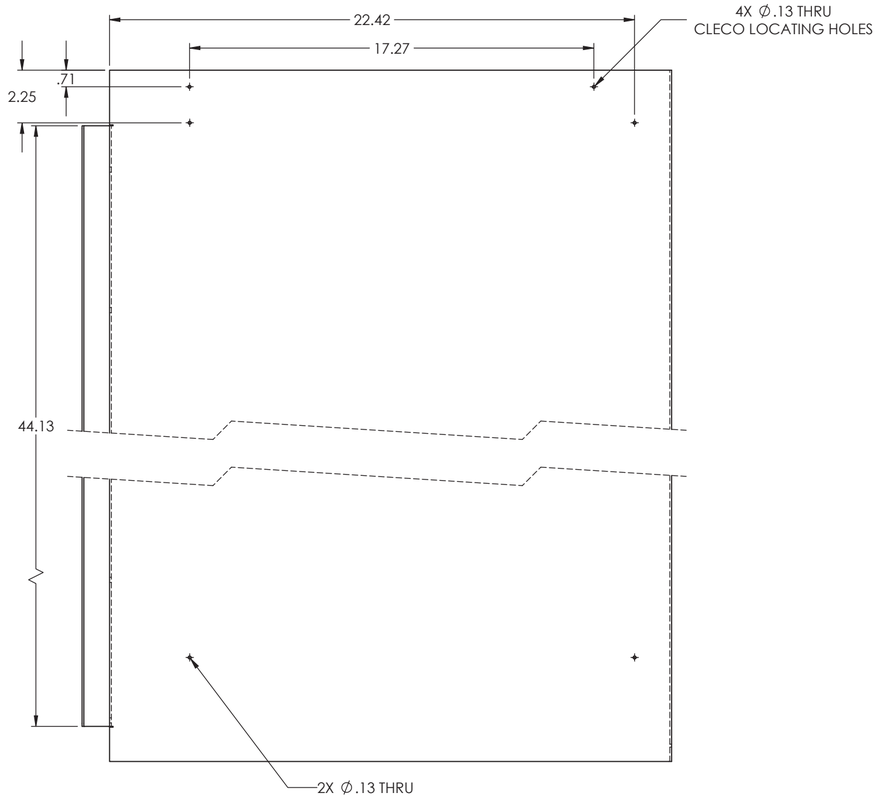

REVISION		NAME	DATE	DEMA INDUSTRIES LIMITED
	DRAWN		26/03/2018	
	CHECKED			
	ENG APPR.			TITLE: CABINET HOUSING — REV
MATERIAL	UNSPECIFIED TOLERANCES (INCH)		PROJECTION	
FINISH	FRACTION ±1/32; 1 PLACE DECIMAL ±.020; 2 PLACE DECIMAL ±.010; 3 PLACE DECIMAL ±.005; 4 PLACE DECIMAL ±.001; ANGLES ±1°		THIRD ANGLE	SIZE C — DRAWING NO. DE2082-01-01
				SCALE 1 : 5 — UNIT INCH — SHEET 5 OF 24

REV C — DE2082-01-01

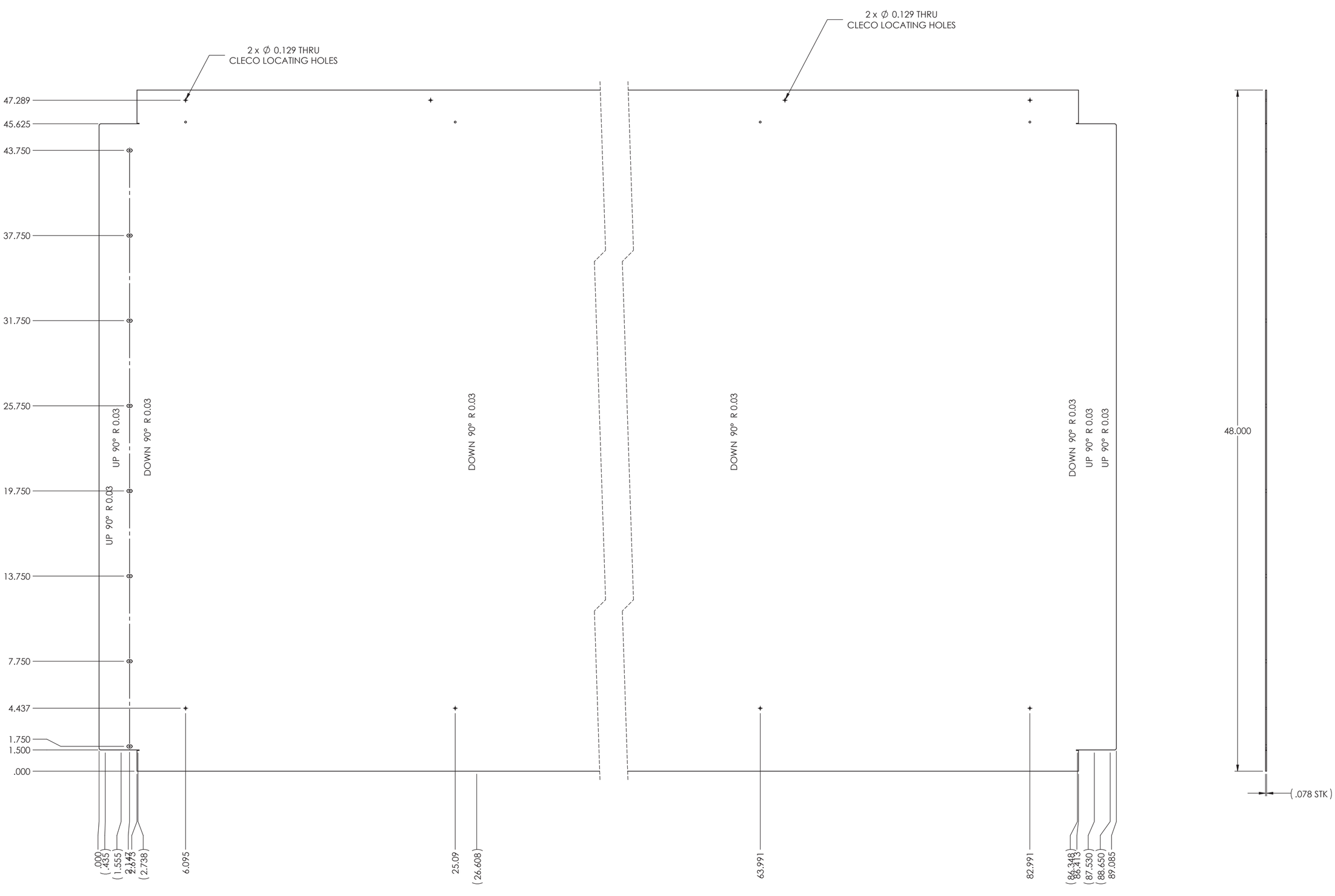

REVISION		NAME	DATE	DEMA INDUSTRIES LIMITED
	DRAWN		26/03/2018	
	CHECKED			
	ENG APPR.			TITLE: CABINET HOUSING — REV
MATERIAL	UNSPECIFIED TOLERANCES (INCH)		PROJECTION	
FINISH	FRACTION ±1/32; 1 PLACE DECIMAL ±.020; 2 PLACE DECIMAL ±.010; 3 PLACE DECIMAL ±.005; 4 PLACE DECIMAL ±.001; ANGLES ±1°		THIRD ANGLE	SIZE C — DRAWING NO. DE2082-01
				SCALE 1 : 5 — UNIT INCH — SHEET 6 OF 24

REV
DE2082-01
C

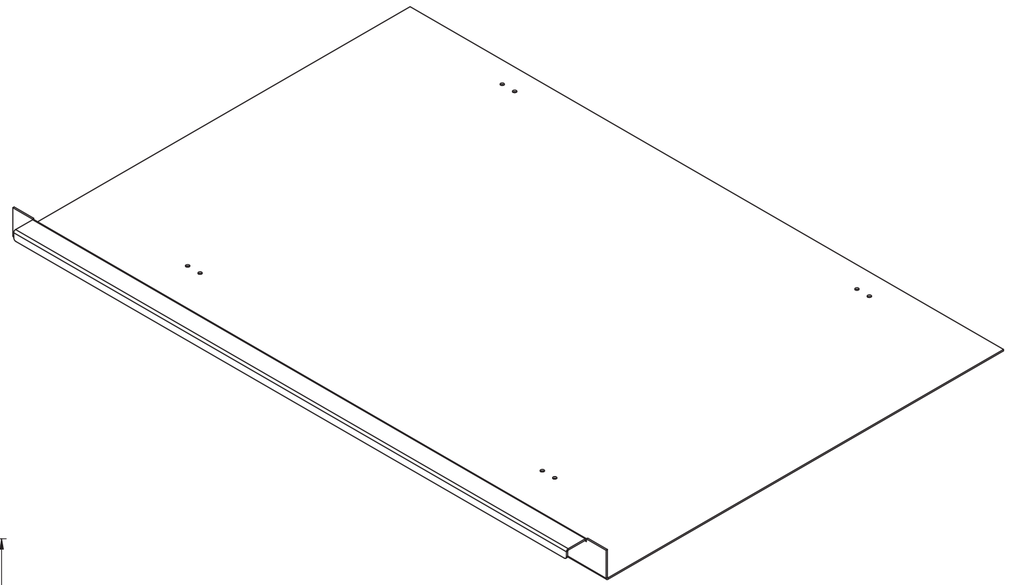

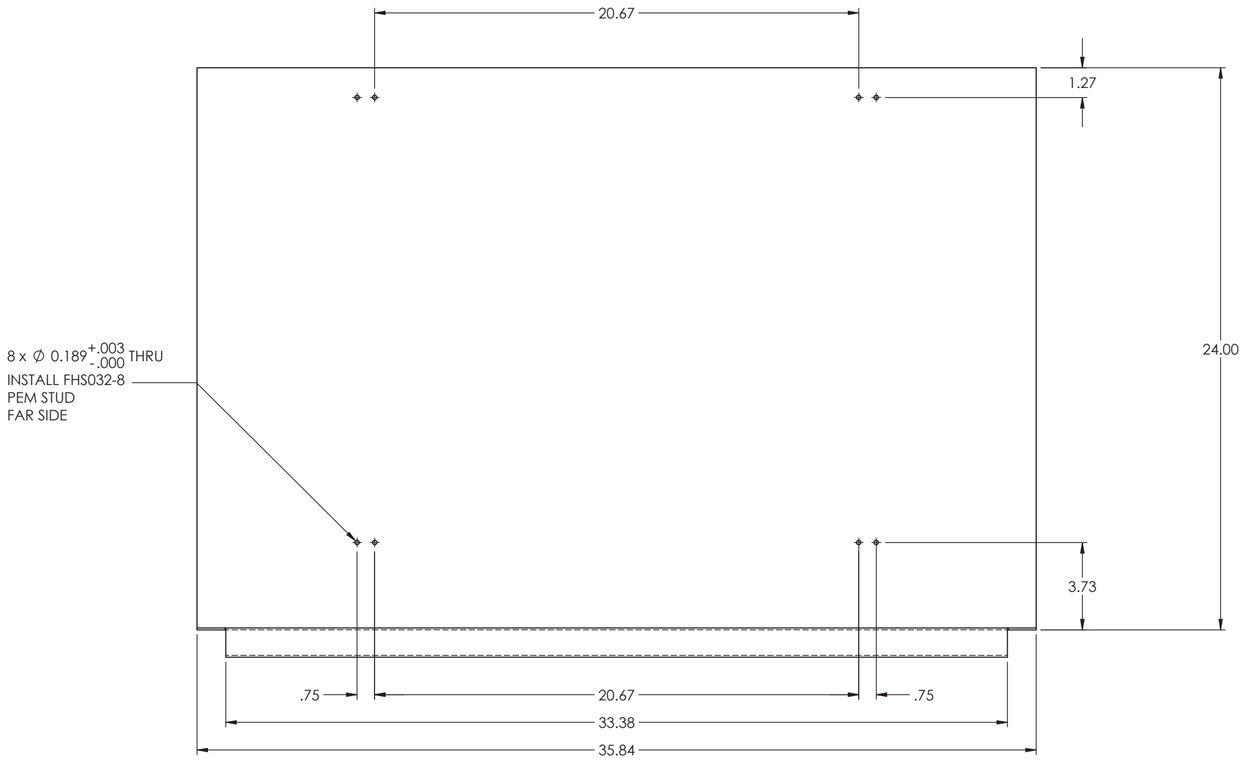

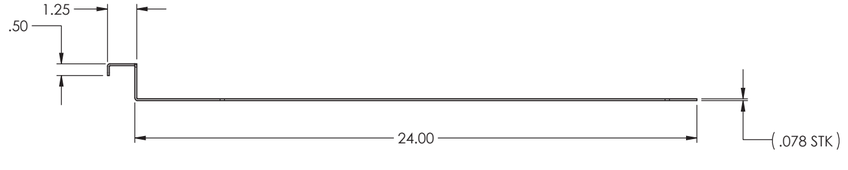

REVISION		NAME	DATE	DEMA INDUSTRIES LIMITED	
	DRAWN		26/03/2018		
	CHECKED				
	ENG APPR.			TITLE: BOTTOM PLATE	REV
MATERIAL	UNSPECIFIED TOLERANCES (INCH)		PROJECTION		
FINISH	FRACTION ±1/32 1 PLACE DECIMAL ±.020 2 PLACE DECIMAL ±.010 3 PLACE DECIMAL ±.005 4 PLACE DECIMAL ±.001 ANGLES ±1°		THIRD ANGLE	SIZE C	DRAWING NO. DE2082-11
				SCALE 1 : 5	UNIT INCH SHEET 8 OF 24

REV
DE2082-11
C

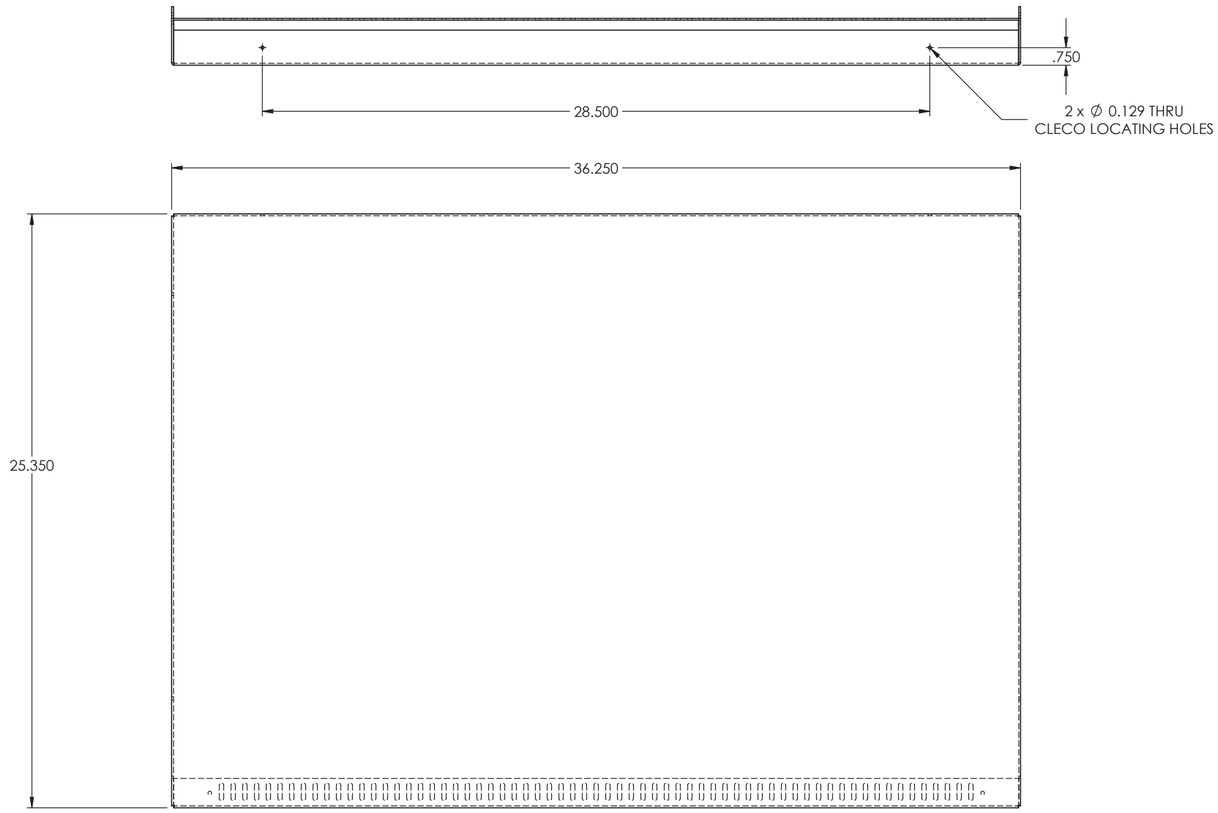

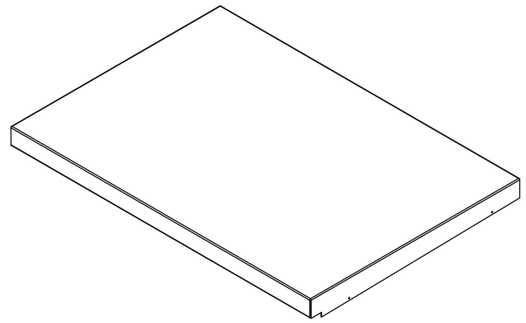

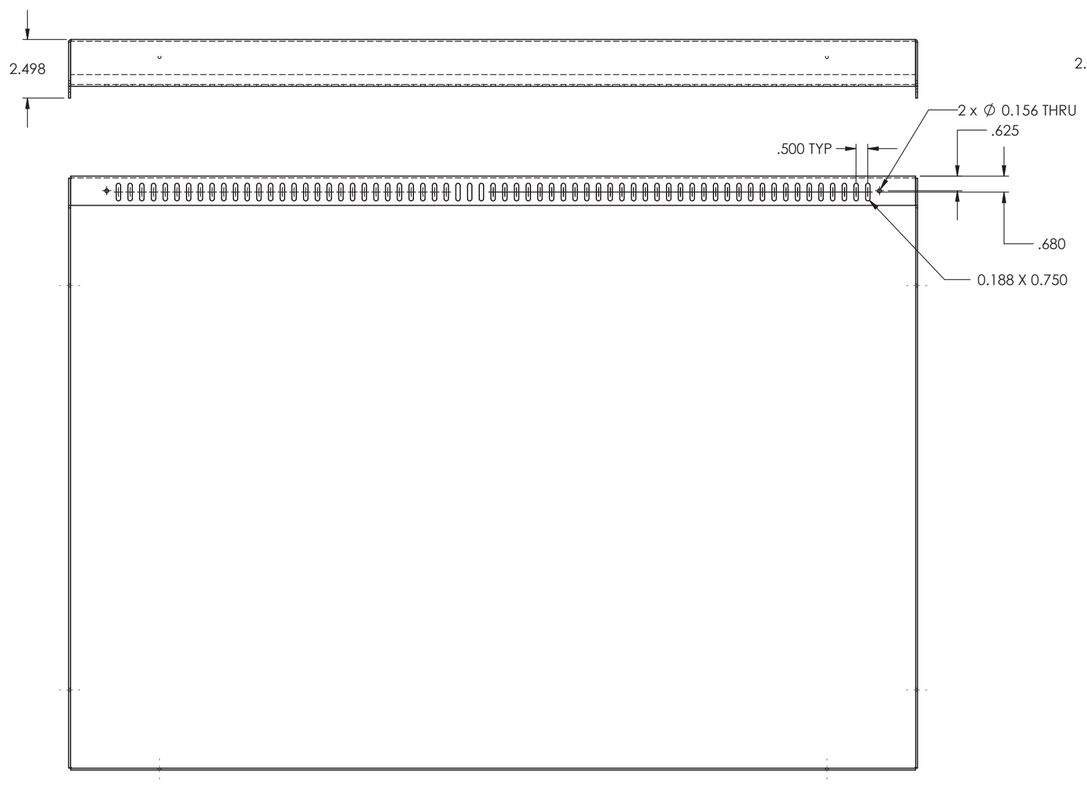

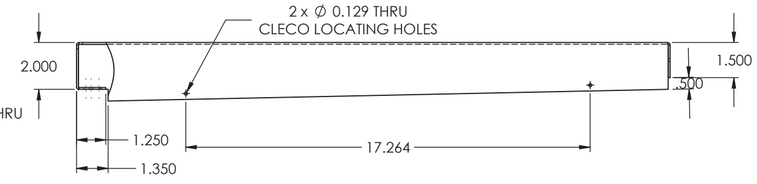

REVISION		NAME	DATE	DEMA INDUSTRIES LIMITED	
	DRAWN		26/03/2018		
	CHECKED				
	ENG APPR.			TITLE CABINET TOP COVER	REV
MATERIAL	UNSPECIFIED TOLERANCES (INCH)		PROJECTION		
FINISH	FRACTION ±1/32 1 PLACE DECIMAL ±.020 2 PLACE DECIMAL ±.010 3 PLACE DECIMAL ±.005 4 PLACE DECIMAL ±.001 ANGLES ±1°		THIRD ANGLE	SIZE C DRAWING NO. DE2082-02	
				SCALE 1 : 5 UNIT INCH SHEET 10 OF 24	

REV
DE2082-02
C

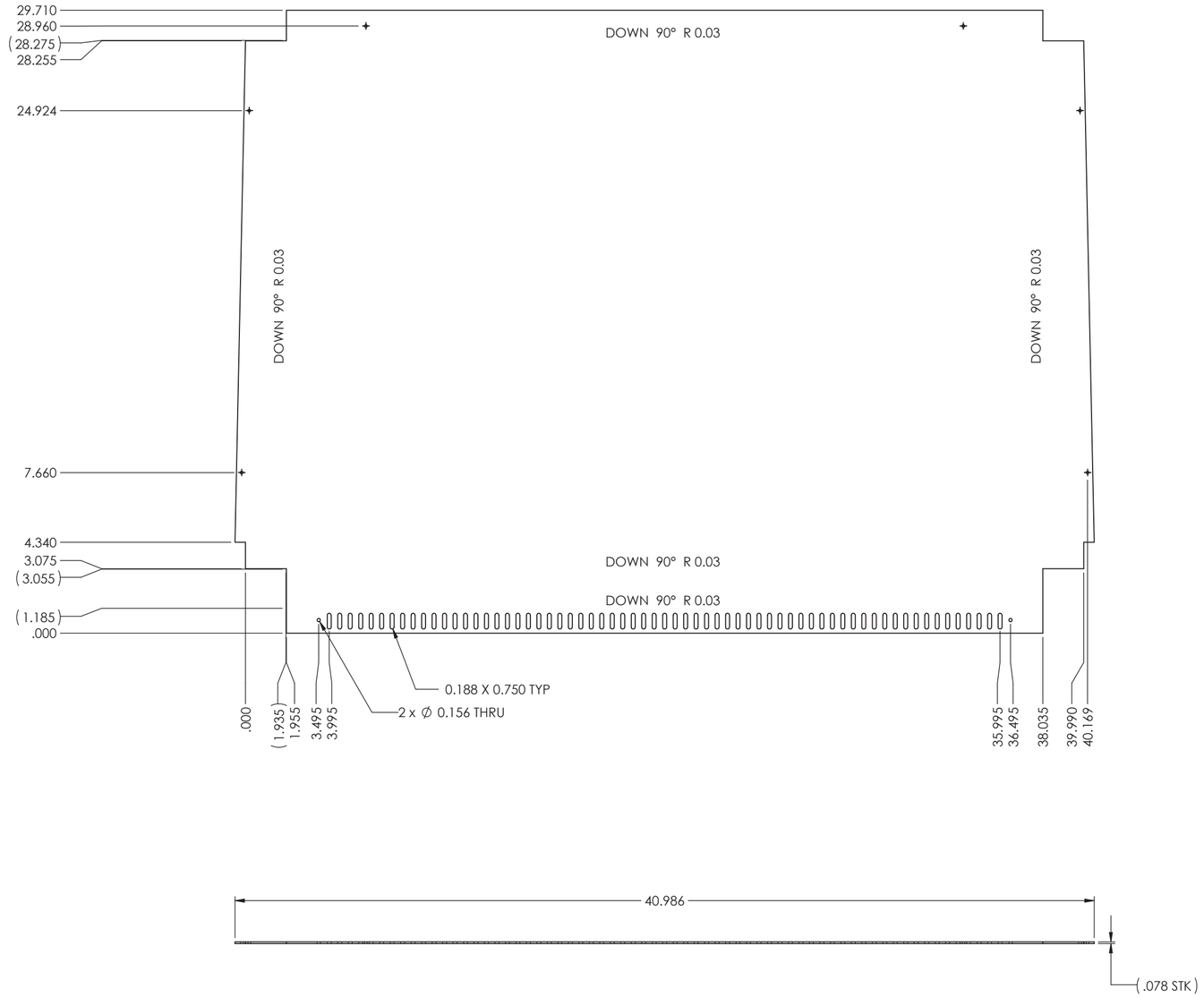

REVISION		NAME	DATE	DEMA INDUSTRIES LIMITED
	DRAWN		26/03/2018	
	CHECKED			
	ENG APPR.			TITLE: CABINET TOP COVER — REV
MATERIAL	UNSPECIFIED TOLERANCES (INCH)		PROJECTION	
FINISH	FRACTION ±1/32; 1 PLACE DECIMAL ±.020; 2 PLACE DECIMAL ±.010; 3 PLACE DECIMAL ±.005; 4 PLACE DECIMAL ±.001; ANGLES ±1°		THIRD ANGLE	SIZE C — DRAWING NO. DE2082-02
				SCALE 1 : 5 — UNIT INCH — SHEET 11 OF 24

REV
DE2082-02
C

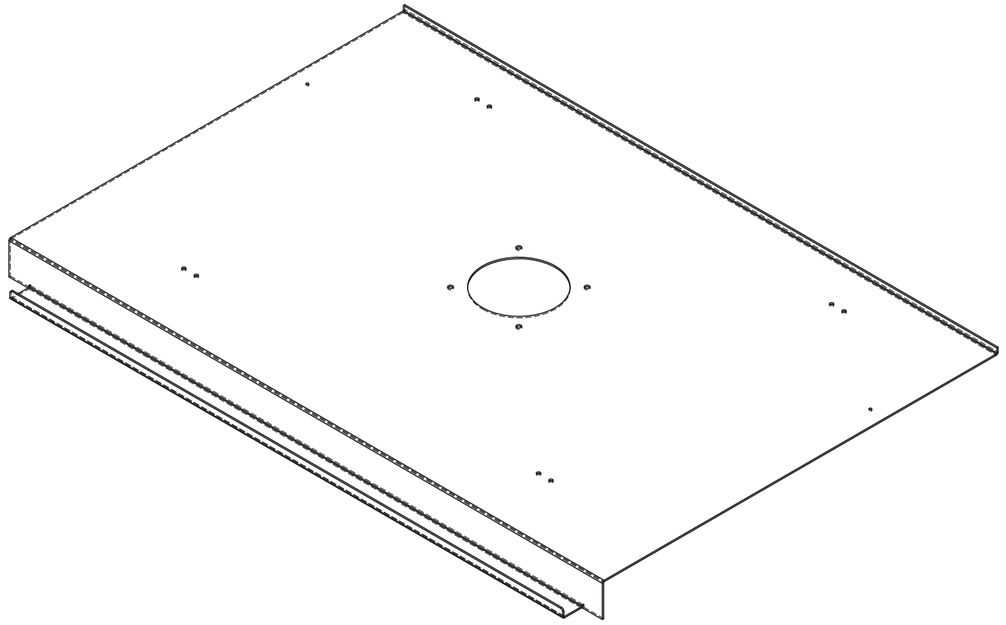

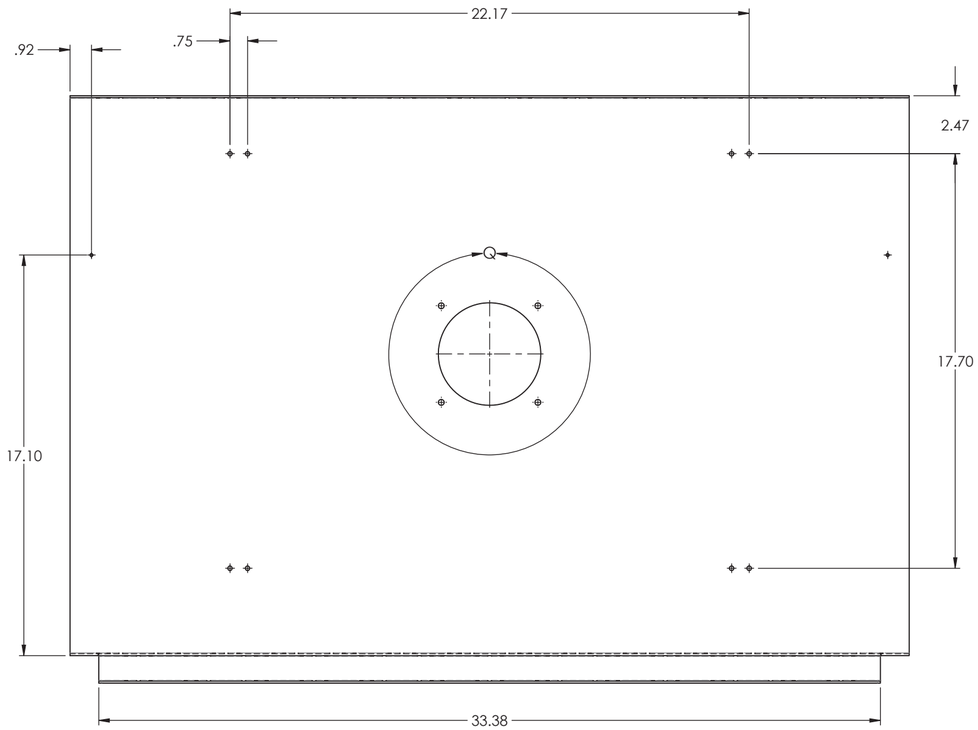

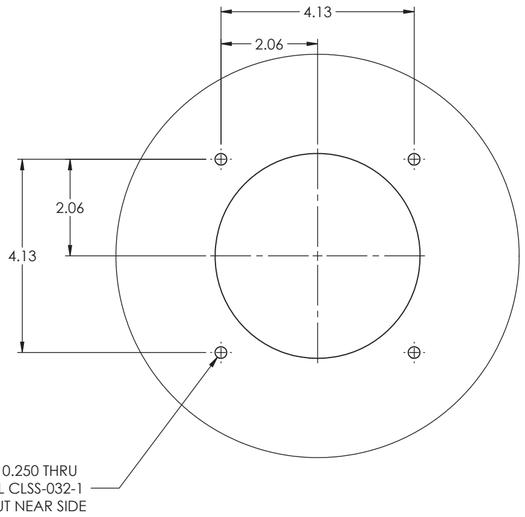

DETAIL Q
SCALE 2 : 5

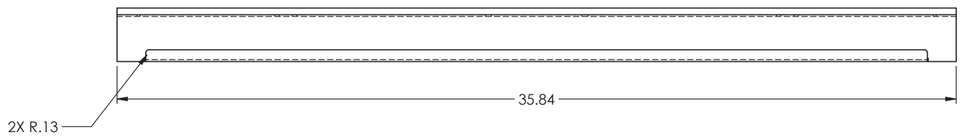

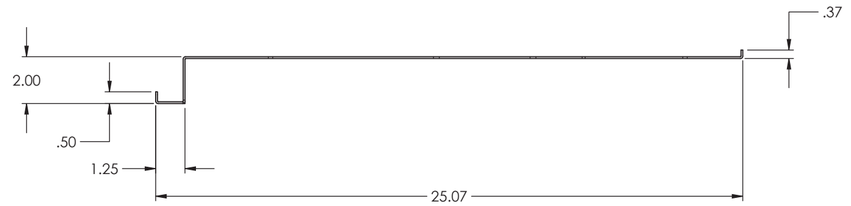

REVISION		NAME	DATE	DEMA INDUSTRIES LIMITED	
	DRAWN		26/03/2018		
	CHECKED				
	ENG APPR.			TITLE: TOP ANGLE PLATE	REV
MATERIAL	UNSPECIFIED TOLERANCES (INCH)		PROJECTION		
FINISH	FRACTION ±1/32 1 PLACE DECIMAL ±.020 2 PLACE DECIMAL ±.010 3 PLACE DECIMAL ±.005 4 PLACE DECIMAL ±.001 ANGLES ±1°		THIRD ANGLE	SIZE C / DRAWING NO. DE2082-03	
				SCALE 1 : 5 / UNIT INCH / SHEET 12 OF 24	

REV
DE2082-03
C

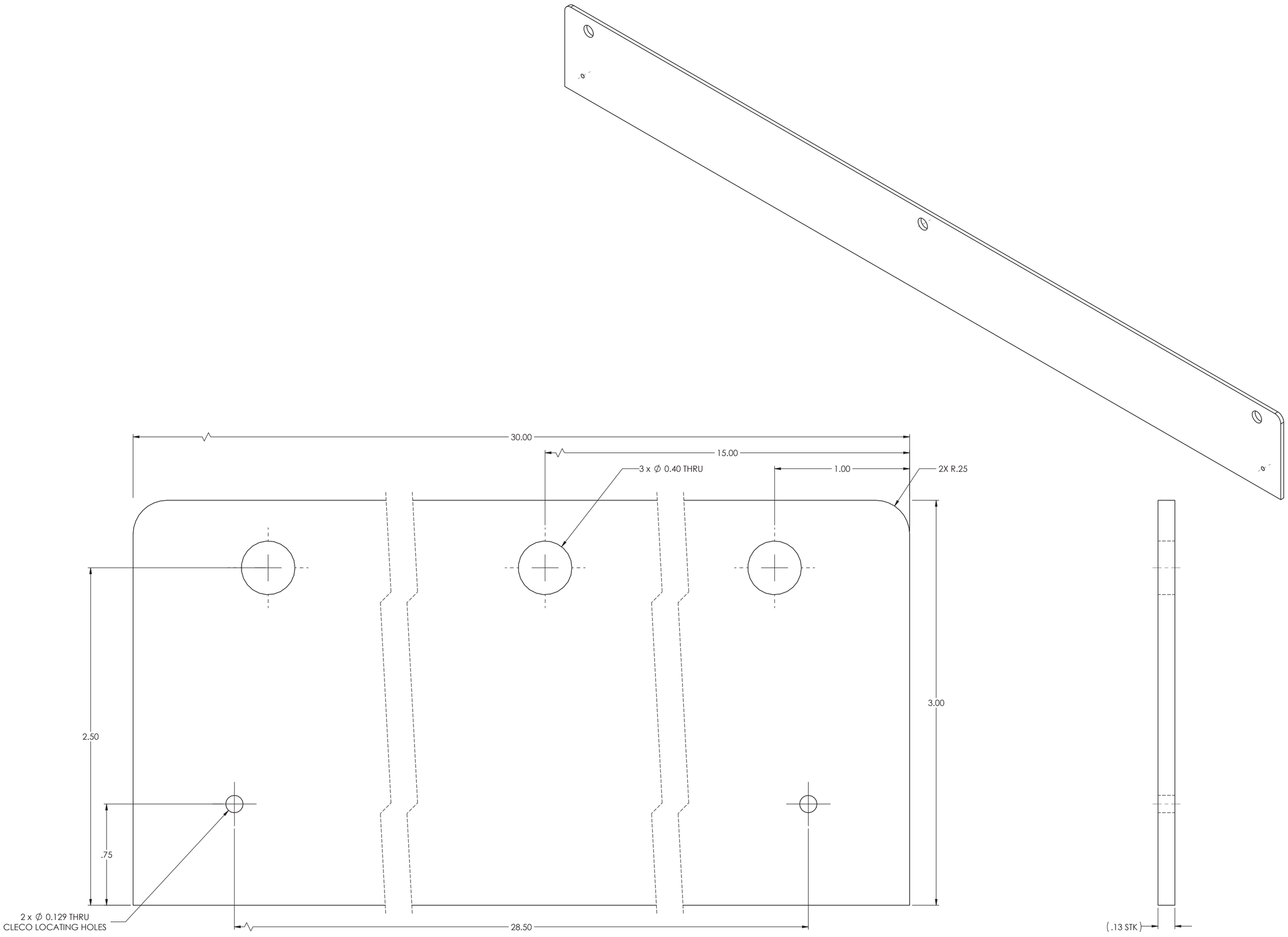

REVISION		NAME	DATE	DEMA INDUSTRIES LIMITED
	DRAWN		26/03/2018	
	CHECKED			
	ENG APPR.			TITLE: MOUNTING TAB — REV: C
MATERIAL	UNSPECIFIED TOLERANCES (INCH)		PROJECTION	
FINISH	FRACTION ±1/32; 1 PLACE DECIMAL ±.020; 2 PLACE DECIMAL ±.010; 3 PLACE DECIMAL ±.005; 4 PLACE DECIMAL ±.001; ANGLES ±1°		THIRD ANGLE	SIZE C — DRAWING NO. DE2082-16 — SCALE 2 : 1 — UNIT INCH — SHEET 14 OF 24

REV C — DE2082-16

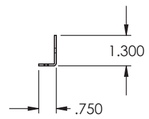

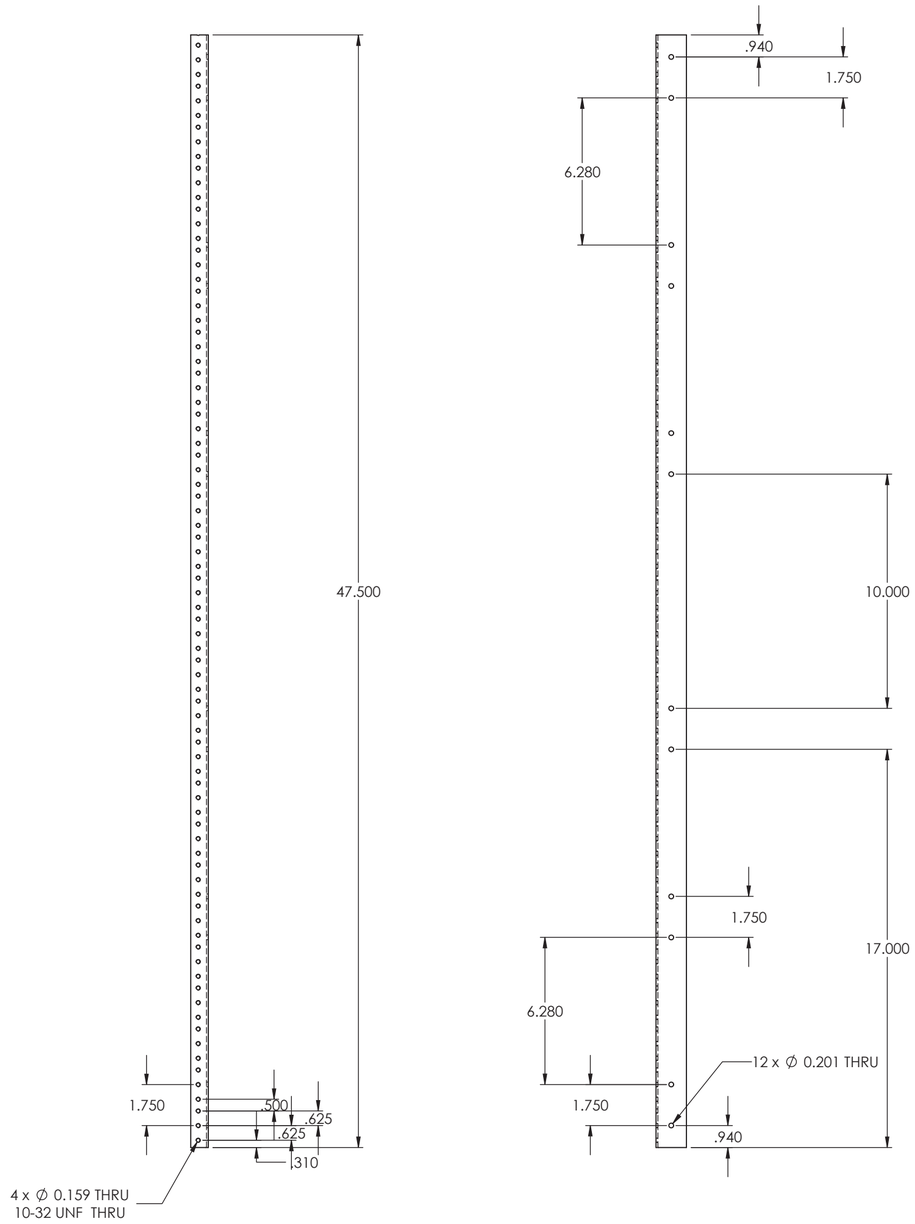

NOTE: DE2082-14-1 SAME BUT OPPOSITE BENDS

REVISION		NAME	DATE	DEMA INDUSTRIES LIMITED
	DRAWN		26/03/2018	
	CHECKED			
	ENG APPR.			TITLE: EIA "L" SERIES — REV
MATERIAL	UNSPECIFIED TOLERANCES (INCH)		PROJECTION	
FINISH	FRACTION ±1/32; 1 PLACE DECIMAL ±.020; 2 PLACE DECIMAL ±.010; 3 PLACE DECIMAL ±.005; 4 PLACE DECIMAL ±.001; ANGLES ±1°		THIRD ANGLE	SIZE C — DRAWING NO. DE2082-14
				SCALE 1 : 5 — UNIT INCH — SHEET 16 OF 24

REV C — DE2082-14

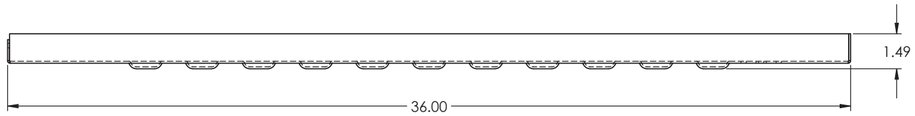

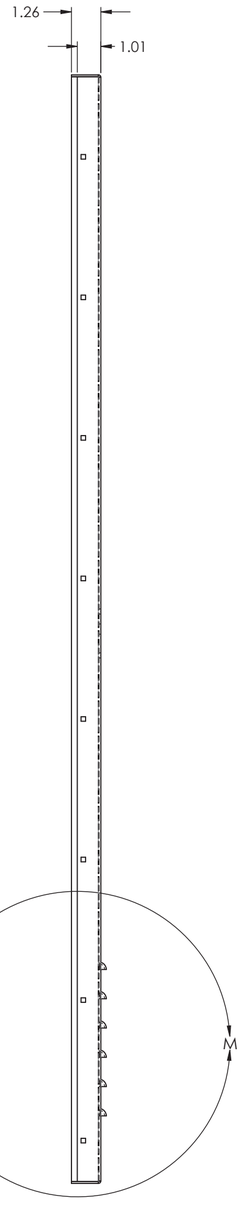

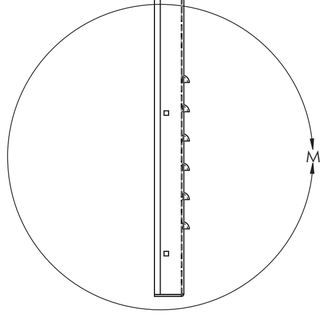

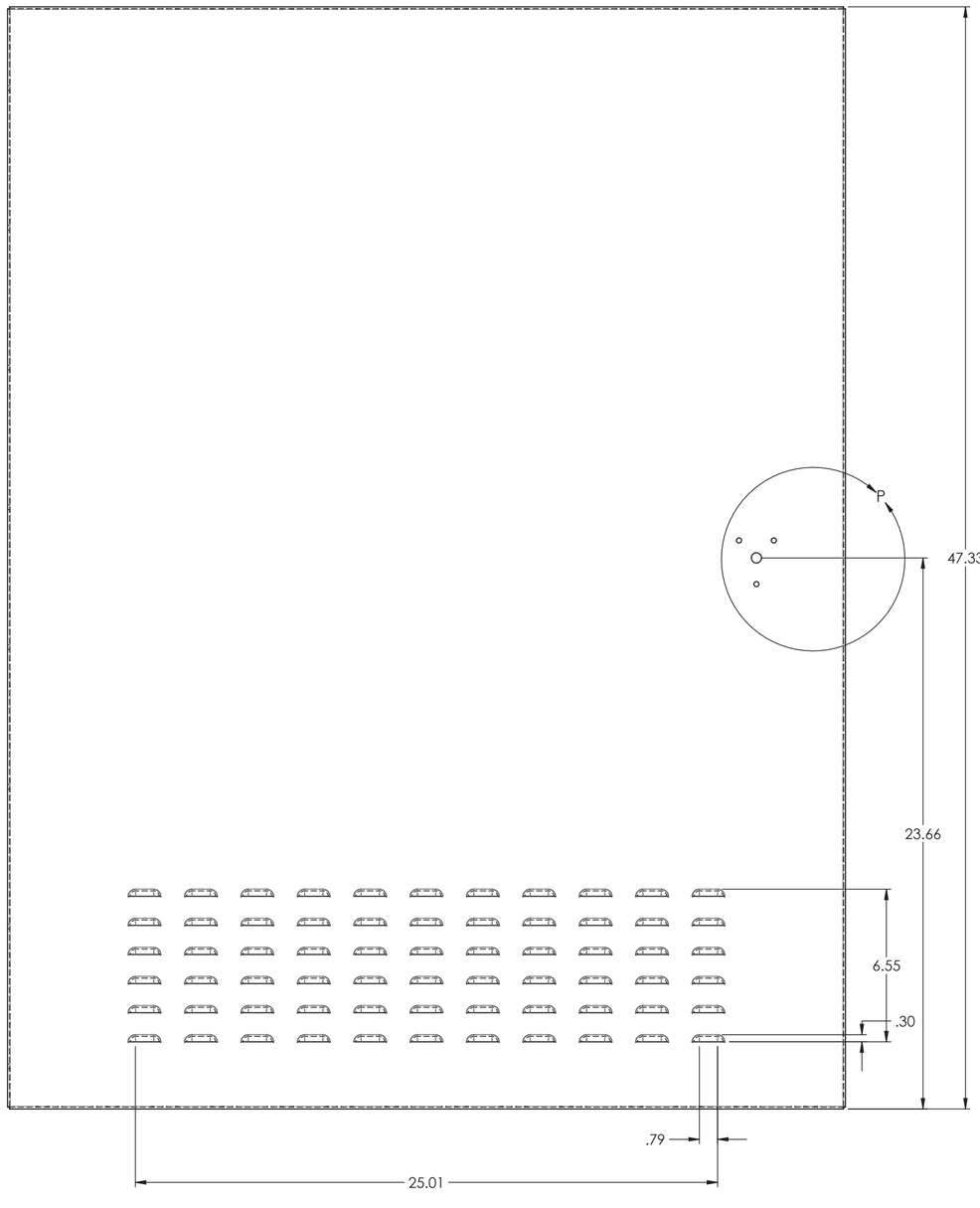

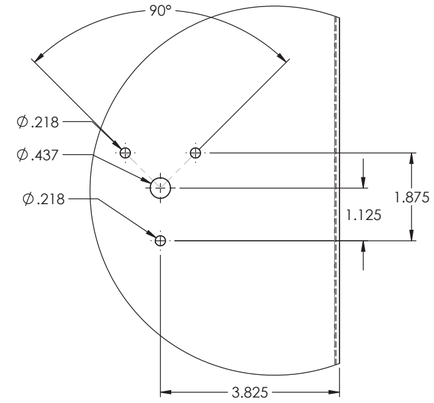

DETAIL P
SCALE 2 : 5

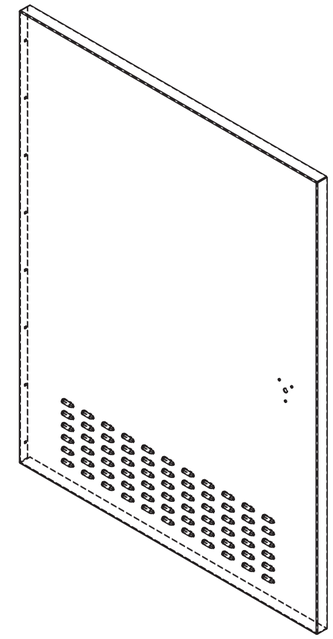

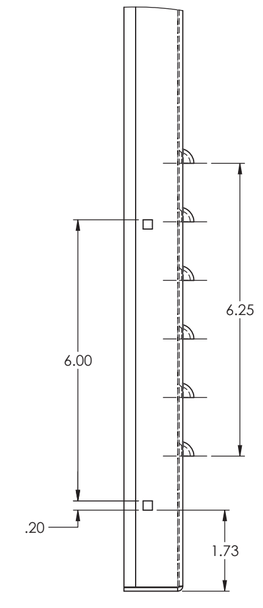

DETAIL M
SCALE 2 : 5

REVISION		NAME	DATE	DEMA INDUSTRIES LIMITED
	DRAWN		26/03/2018	
	CHECKED			
	ENG APPR.			TITLE REV
MATERIAL	UNSPECIFIED TOLERANCES (INCH)		PROJECTION	
FINISH	FRACTION ±1/32 1 PLACE DECIMAL ±.020 2 PLACE DECIMAL ±.010 3 PLACE DECIMAL ±.005 4 PLACE DECIMAL ±.001 ANGLES ±1°		THIRD ANGLE	SIZE C DRAWING NO. DE2082-13-01 SCALE 1 : 5 UNIT INCH SHEET 17 OF 24

REV
DE2082-13-01
C

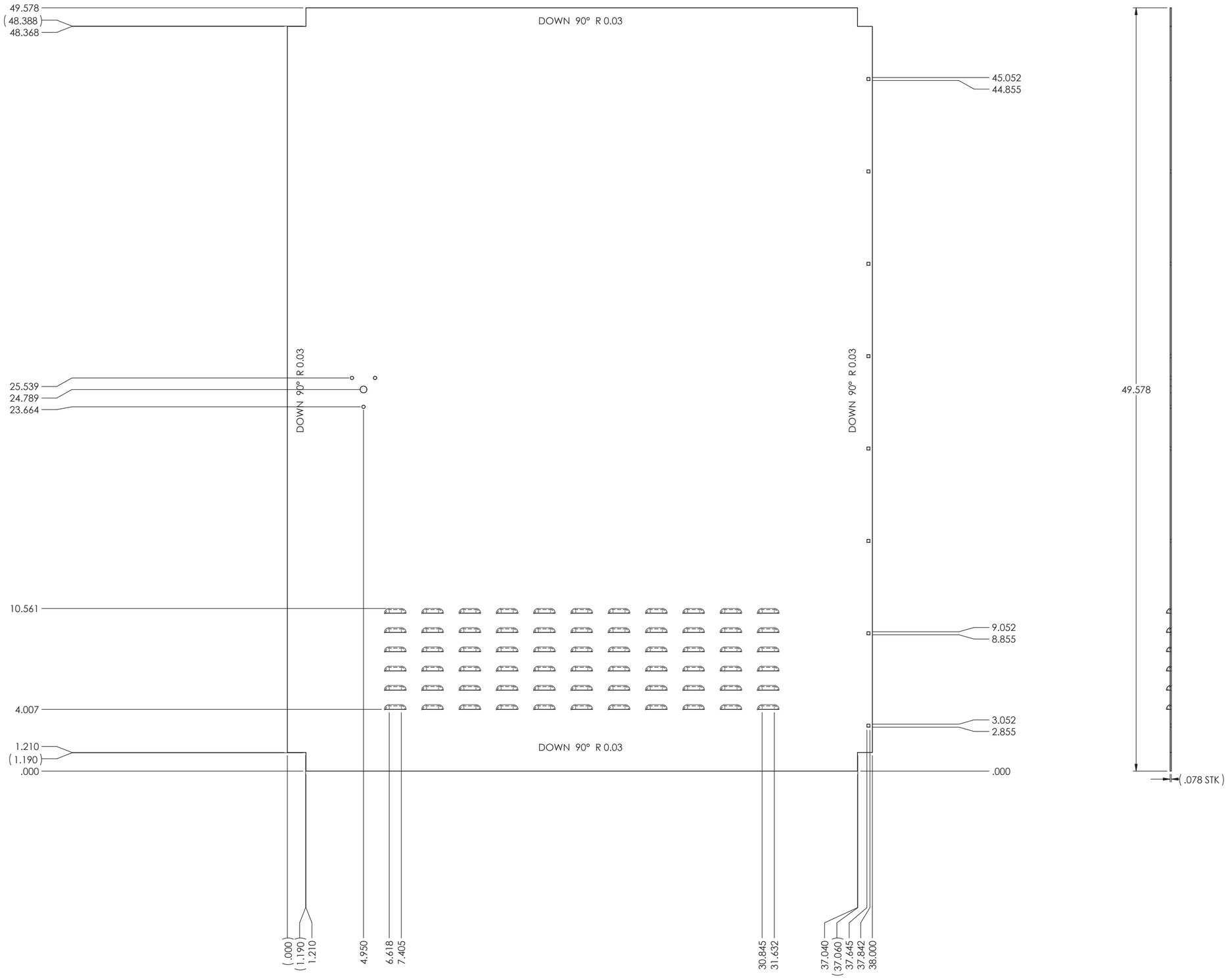

REVISION		NAME	DATE	DEMA INDUSTRIES LIMITED
	DRAWN		26/03/2018	
	CHECKED			
	ENG APPR.			TITLE: CABINET DOOR — REV
MATERIAL	UNSPECIFIED TOLERANCES (INCH)		PROJECTION	
FINISH	FRACTION ±1/32; 1 PLACE DECIMAL ±.020; 2 PLACE DECIMAL ±.010; 3 PLACE DECIMAL ±.005; 4 PLACE DECIMAL ±.001; ANGLES ±1°		THIRD ANGLE	SIZE C — DRAWING NO. DE2082-13
				SCALE 1 : 5 — UNIT INCH — SHEET 18 OF 24

REV
DE2082-13
C

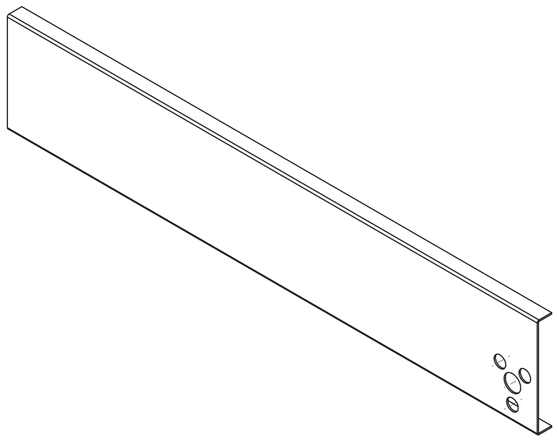

REVISION		NAME	DATE	DEMA INDUSTRIES LIMITED
	DRAWN		26/03/2018	
	CHECKED			
	ENG APPR.			TITLE: FRONT DOOR LOCK MOUNT PLATE ASSEM — REV
MATERIAL	UNSPECIFIED TOLERANCES (INCH)		PROJECTION	
FINISH	FRACTION ±1/32; 1 PLACE DECIMAL ±.020; 2 PLACE DECIMAL ±.010; 3 PLACE DECIMAL ±.005; 4 PLACE DECIMAL ±.001; ANGLES ±1°		THIRD ANGLE	SIZE C — DRAWING NO. DE2082-07
				SCALE 1 : 2 — UNIT INCH — SHEET 19 OF 24

REV: C

REVISION		NAME	DATE	DEMA INDUSTRIES LIMITED
	DRAWN		26/03/2018	
	CHECKED			
	ENG APPR.			TITLE: FRONT DOOR LOCK MOUNT PLATE ASSEM — REV
MATERIAL	UNSPECIFIED TOLERANCES (INCH)		PROJECTION	SIZE C — DRAWING NO. DE2082-07
FINISH	FRACTION ±1/32; 1 PLACE DECIMAL ±.020; 2 PLACE DECIMAL ±.010; 3 PLACE DECIMAL ±.005; 4 PLACE DECIMAL ±.001; ANGLES ±1°		THIRD ANGLE	SCALE 1 : 2 — UNIT INCH — SHEET 20 OF 24

REV
DE2082-07
C

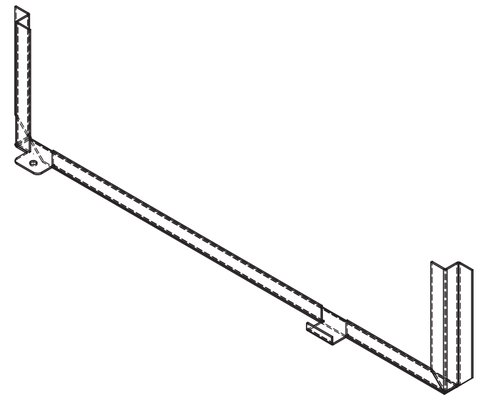

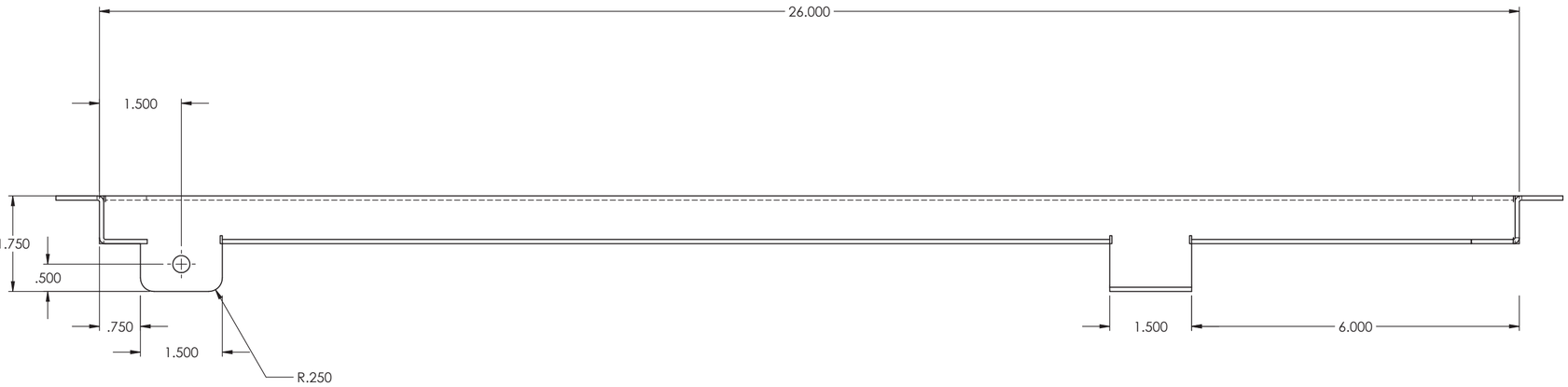

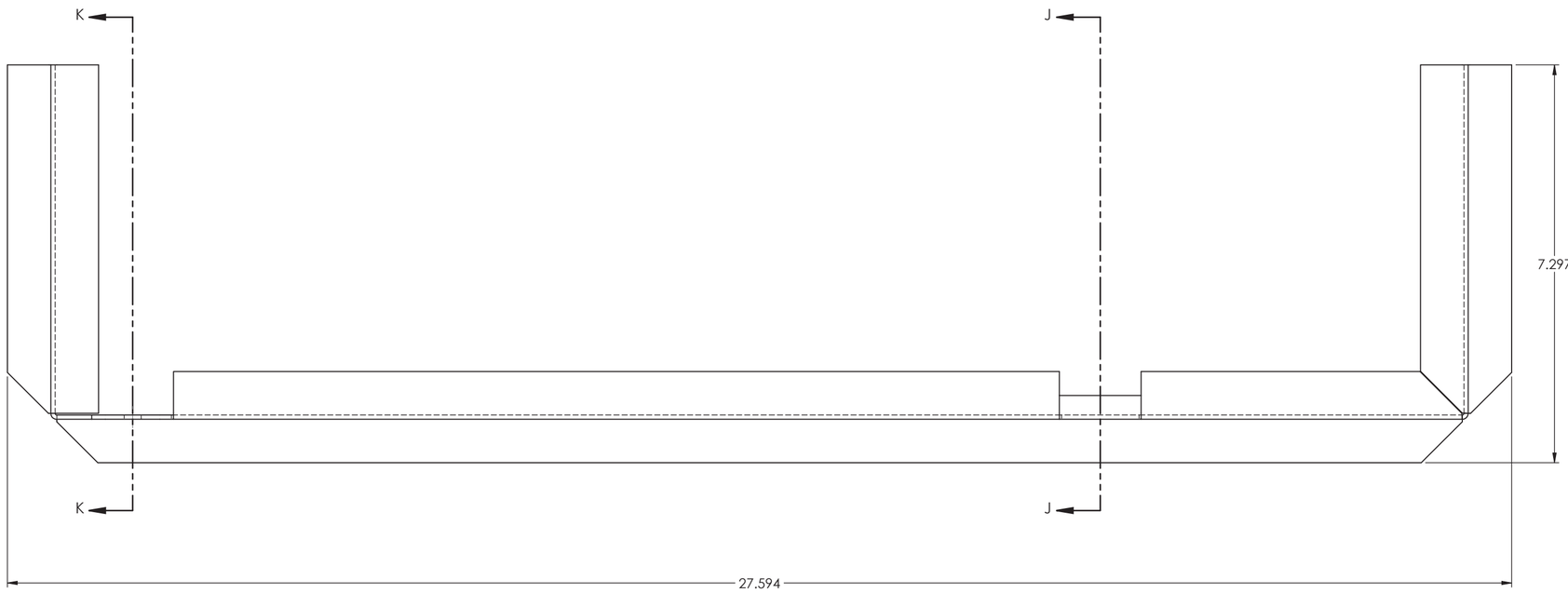

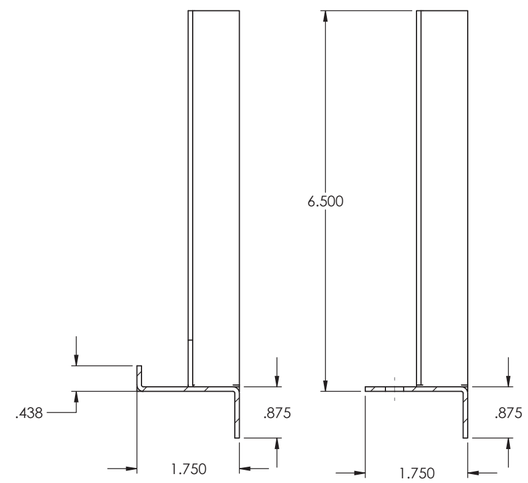

SECTION J-J
SCALE 1 : 2

SECTION K-K
SCALE 1 : 2

REVISION		NAME	DATE	DEMA INDUSTRIES LIMITED
	DRAWN		26/03/2018	
	CHECKED			
	ENG APPR.			TITLE: FILTER HOLDING BRACKET — REV
MATERIAL	UNSPECIFIED TOLERANCES (INCH)		PROJECTION	
FINISH	FRACTION ±1/32; 1 PLACE DECIMAL ±.020; 2 PLACE DECIMAL ±.010; 3 PLACE DECIMAL ±.005; 4 PLACE DECIMAL ±.001; ANGLES ±1°		THIRD ANGLE	SIZE C — DRAWING NO. DE2082-12
				SCALE 1 : 2 — UNIT INCH — SHEET 21 OF 24

REV
DE2082-12
C

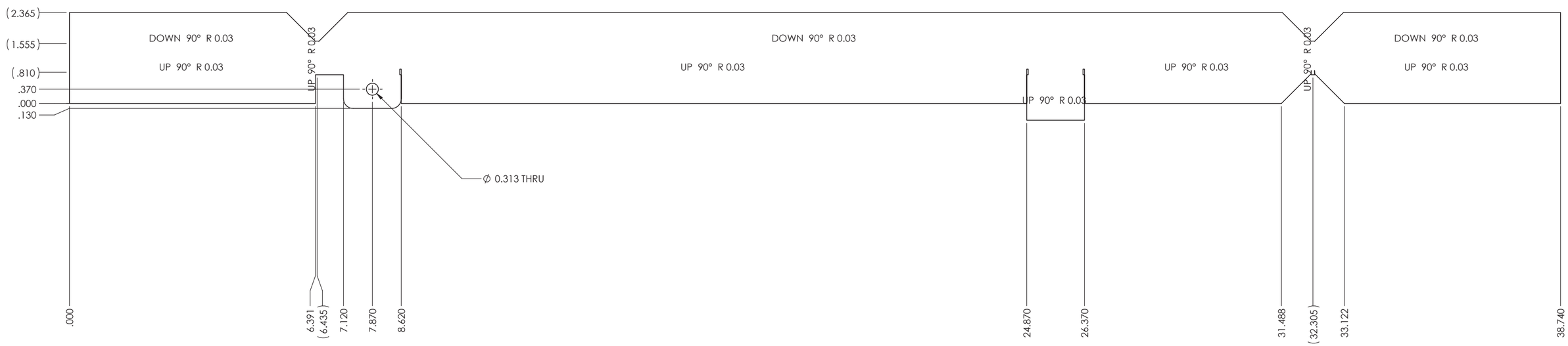

REVISION		NAME	DATE	DEMA INDUSTRIES LIMITED
	DRAWN		26/03/2018	
	CHECKED			
	ENG APPR.			TITLE FILTER HOLDING BRACKET REV
MATERIAL	UNSPECIFIED TOLERANCES (INCH)		PROJECTION	
FINISH	FRACTION ±1/32 1 PLACE DECIMAL ±.020 2 PLACE DECIMAL ±.010 3 PLACE DECIMAL ±.005 4 PLACE DECIMAL ±.001 ANGLES ±1°		THIRD ANGLE	SIZE C DRAWING NO. DE2082-12 SCALE 1 : 2 UNIT INCH SHEET 22 OF 24

REV
DE2082-12
C

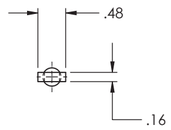

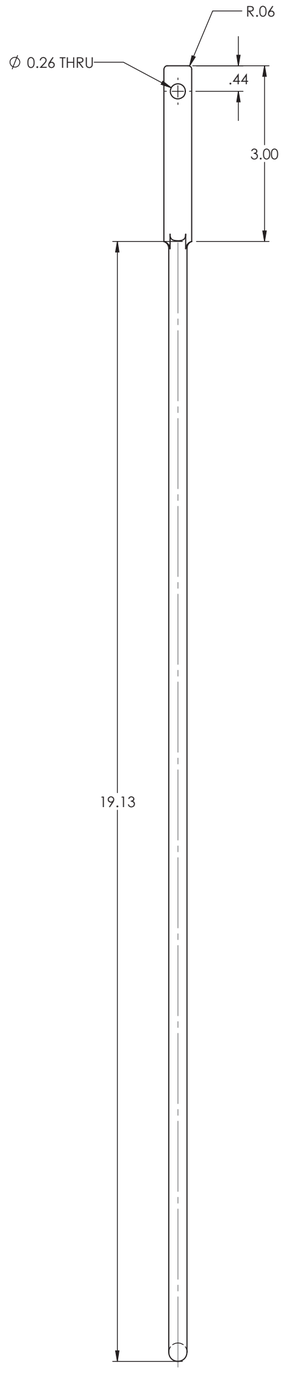

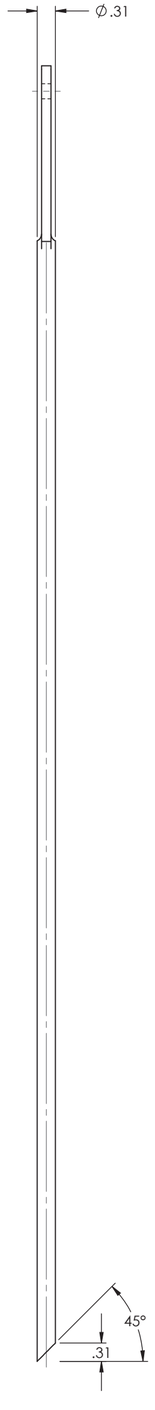

REVISION		NAME	DATE	DEMA INDUSTRIES LIMITED	
	DRAWN		26/03/2018		
	CHECKED				
	ENG APPR.			TITLE: DOOR LATCH ROD	REV
MATERIAL	UNSPECIFIED TOLERANCES (INCH)		PROJECTION		
FINISH	FRACTION ±1/32 1 PLACE DECIMAL ±.020 2 PLACE DECIMAL ±.010 3 PLACE DECIMAL ±.005 4 PLACE DECIMAL ±.001 ANGLES ±1°		THIRD ANGLE	SIZE C	DRAWING NO. DE2082-09
				SCALE 1 : 2	UNIT INCH SHEET 23 OF 24

REV
DE2082-09
C

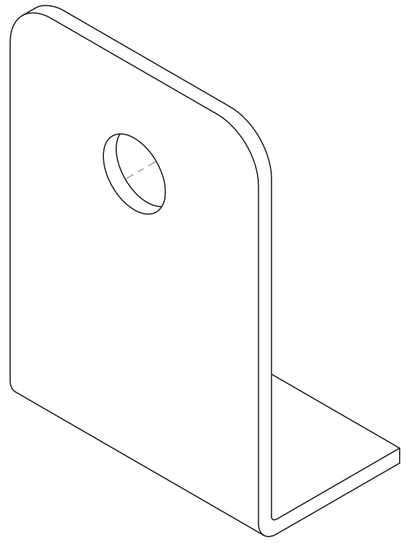

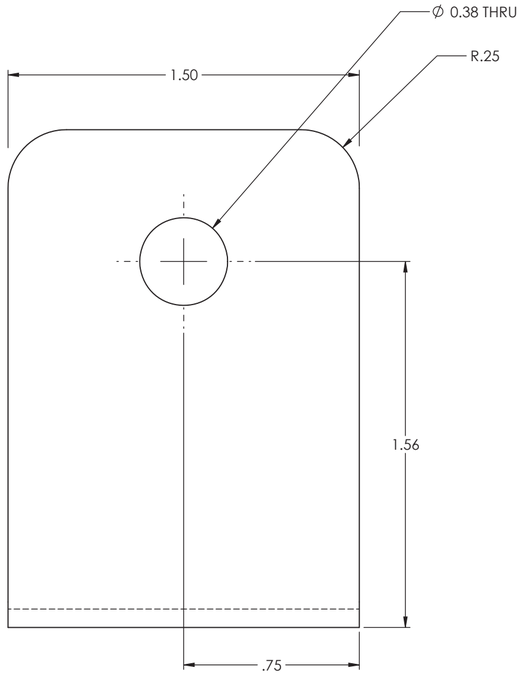

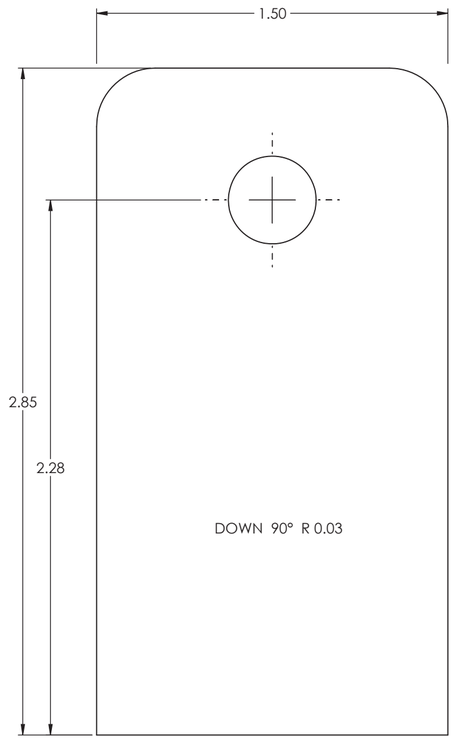

REVISION		NAME	DATE	DEMA INDUSTRIES LIMITED	
	DRAWN		26/03/2018		
	CHECKED				
	ENG APPR.			TITLE LOCK MECHANISM GUIDE	REV
MATERIAL	UNSPECIFIED TOLERANCES (INCH)		PROJECTION		
FINISH	FRACTION ±1/32 1 PLACE DECIMAL ± .020 2 PLACE DECIMAL ± .010 3 PLACE DECIMAL ± .005 4 PLACE DECIMAL ± .001 ANGLES ±1°		THIRD ANGLE	SIZE C DRAWING NO. DE2082-05	
				SCALE 2 : 1 UNIT INCH SHEET 24 OF 24	

REV
DE2082-05
C

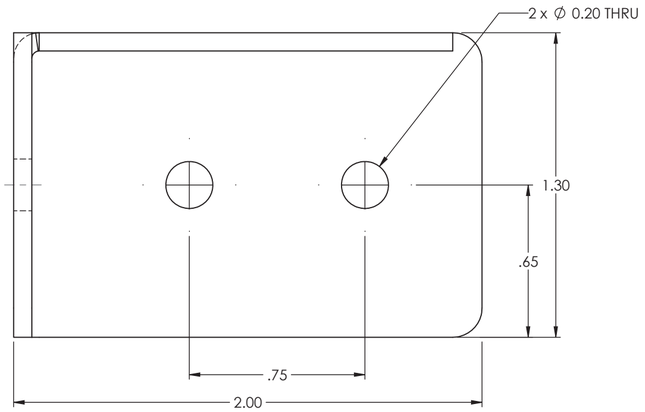

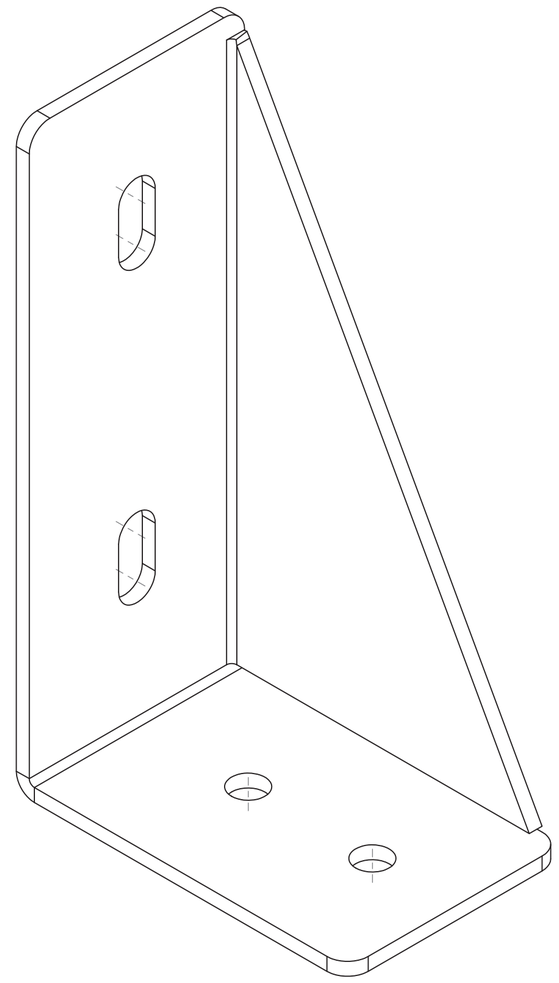

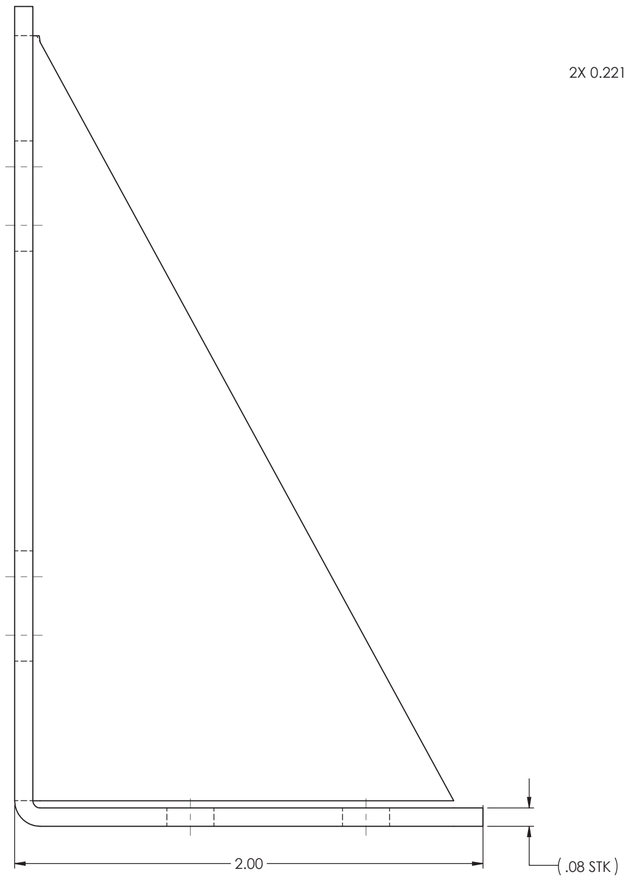

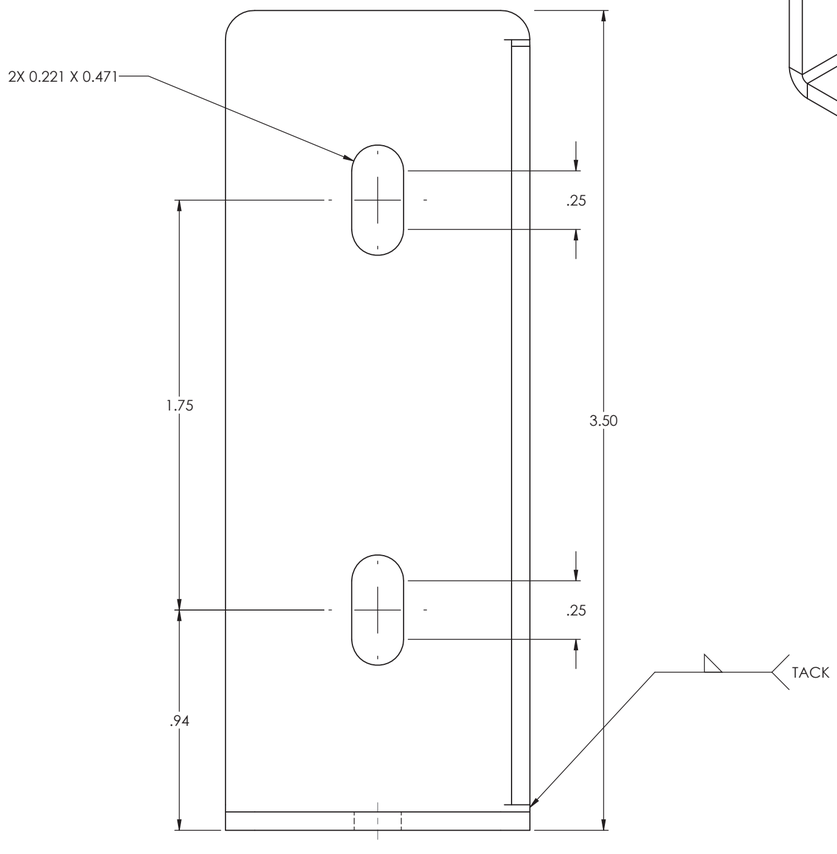

NOTE: DE2082-17-01 SAME BUT OPPOSITE BENDS

REVISION		NAME	DATE	DEMA INDUSTRIES LIMITED
	DRAWN		26/03/2018	
	CHECKED			
	ENG APPR.			TITLE: EIA SUPPORT BRACKET — REV
MATERIAL	UNSPECIFIED TOLERANCES (INCH)		PROJECTION	
FINISH	FRACTION ±1/32; 1 PLACE DECIMAL ±.020; 2 PLACE DECIMAL ±.010; 3 PLACE DECIMAL ±.005; 4 PLACE DECIMAL ±.001; ANGLES ±1°		THIRD ANGLE	SIZE C — DRAWING NO. DE2082-17
				SCALE 2 : 1 — UNIT INCH — SHEET 25 OF 25

REV
DE2082-17
C

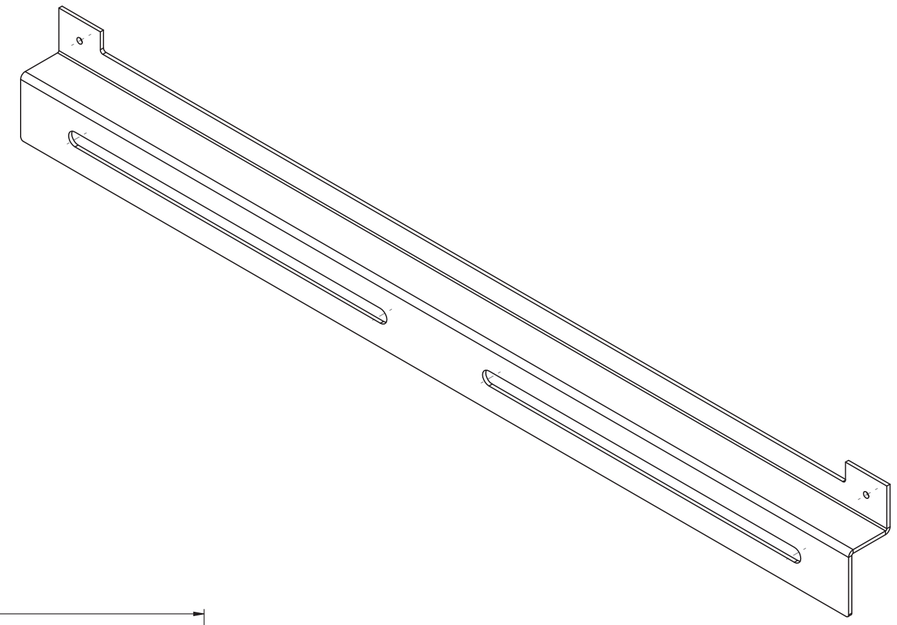

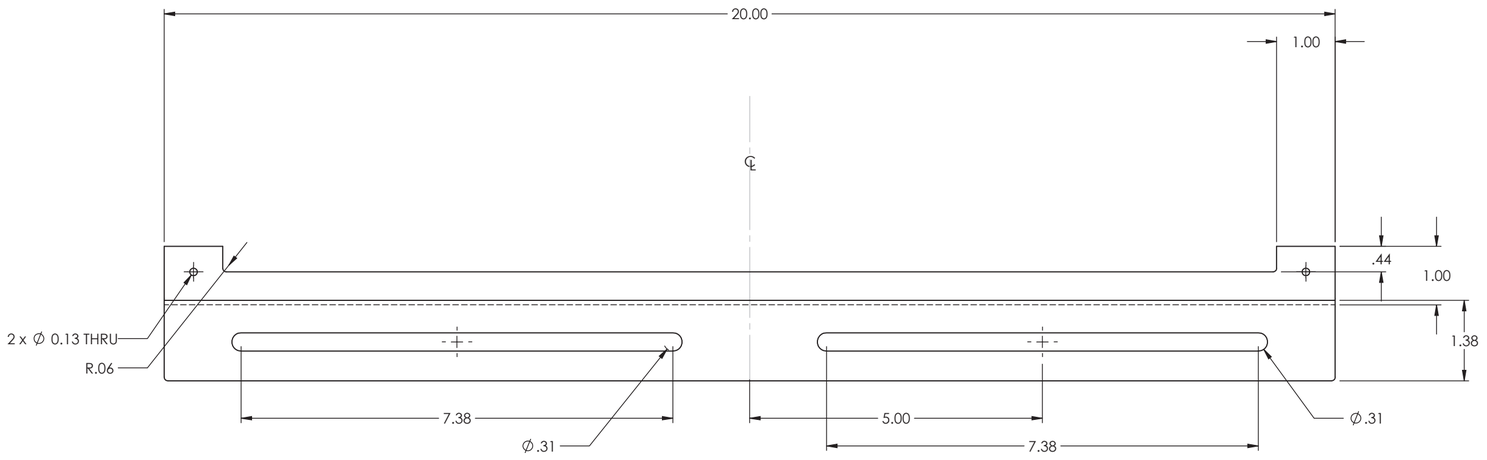

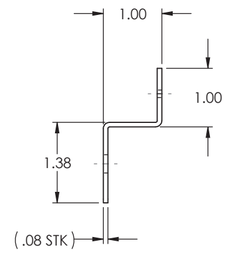

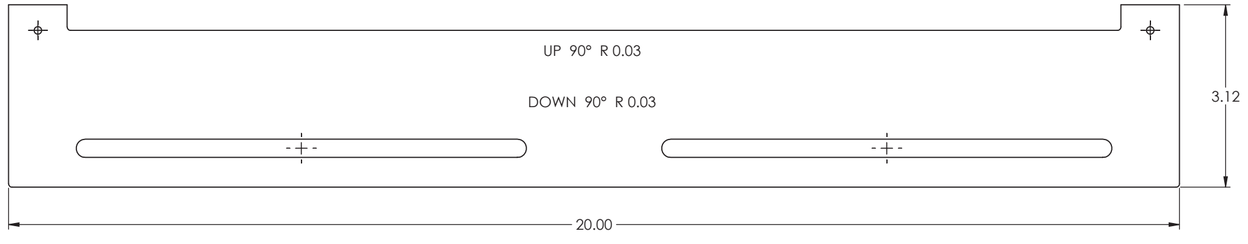

REVISION		NAME	DATE	DEMA INDUSTRIES LIMITED	
	DRAWN		26/03/2018		
	CHECKED				
	ENG APPR.			TITLE UNISTRUT MOUNTING BRACKET	REV
MATERIAL	UNSPECIFIED TOLERANCES (INCH)		PROJECTION		
FINISH	FRACTION ±1/32 1 PLACE DECIMAL ±.020 2 PLACE DECIMAL ±.010 3 PLACE DECIMAL ±.005 4 PLACE DECIMAL ±.001 ANGLES ±1°		THIRD ANGLE	SIZE C DRAWING NO. DE2082-18	
				SCALE UNIT INCH SHEET OF	

REV
DE2082-18
C

Power Cabinets

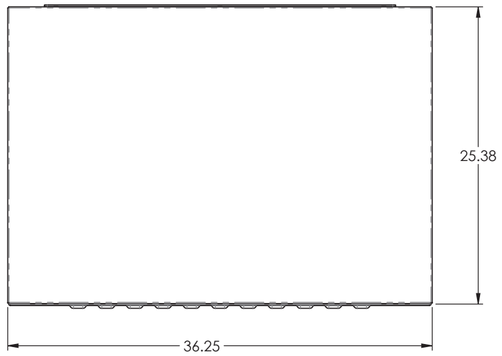

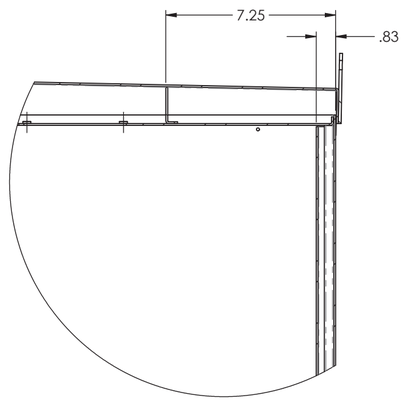

DETAIL A
SCALE 1 : 5

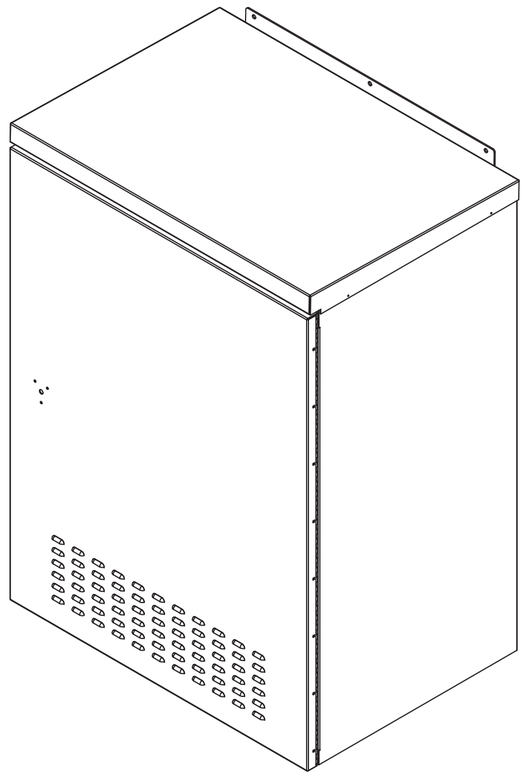

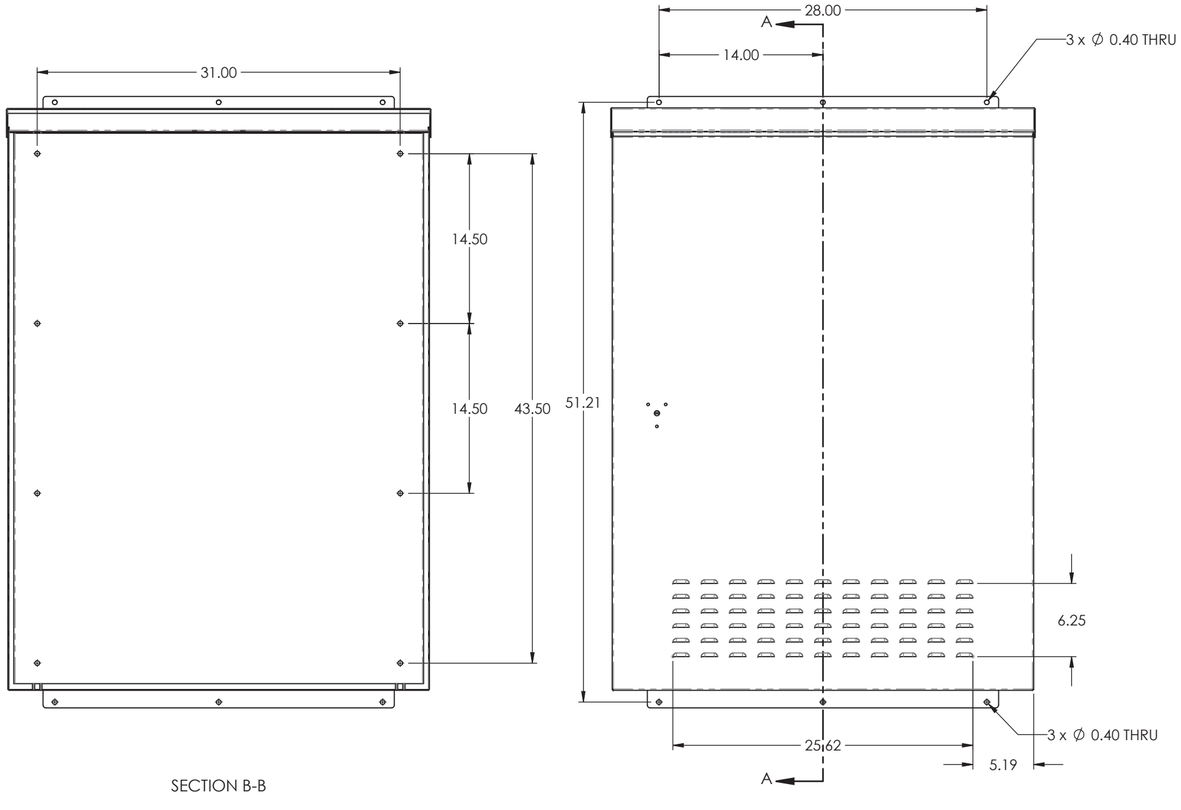

SECTION B-B

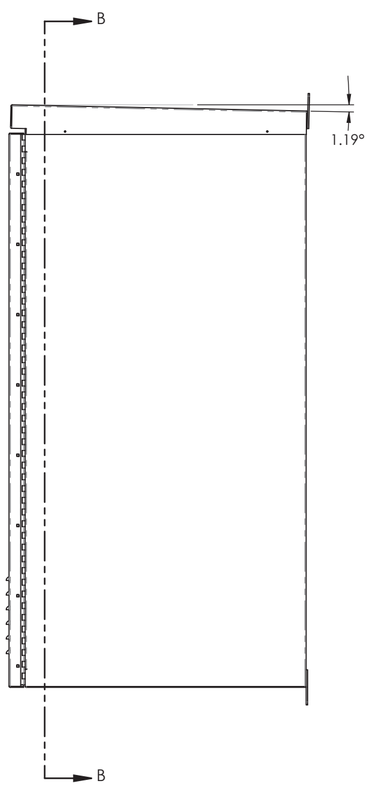

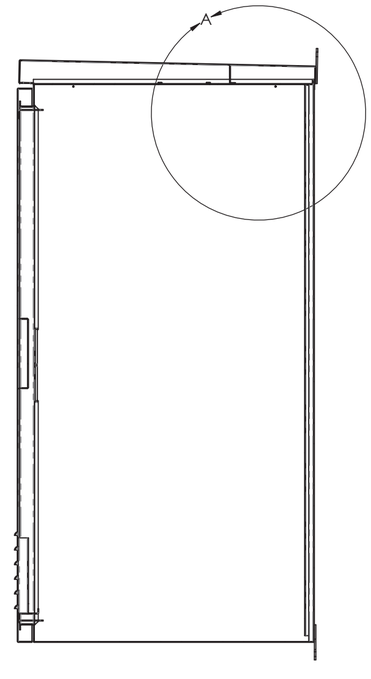

SECTION A-A

REVISION		NAME	DATE	DEMA INDUSTRIES LIMITED	
	DRAWN		26/03/2018		
	CHECKED				
	ENG APPR.			TITLE GANTRY ELECTRICAL CABINET	REV
MATERIAL	UNSPECIFIED TOLERANCES (INCH)		PROJECTION		
FINISH	FRACTION ±1/32 1 PLACE DECIMAL ± .020 2 PLACE DECIMAL ± .010 3 PLACE DECIMAL ± .005 4 PLACE DECIMAL ± .001 ANGLES ±1°		THIRD ANGLE	SIZE C DRAWING NO. DE2084	
				SCALE 1 : 10 UNIT INCH SHEET 1 OF 24	

REV
DE2084
C

ITEM NO.	PART NUMBER	DESCRIPTION	QTY.
1	DE2084-01	CABINET HOUSING	1
2	DE2084-11	BOTTOM PLATE	1
3	DE2084-03	TOP ANGLE PLATE	1
4	DE2084-02	CABINET TOP COVER	1
5	DE2084-15	DOOR ASSEMBLY	1
6	DE2084-16	MOUNTING TAB	2
7	DE2084-08	HINGE	1
8	DE2084-19	MOUNTING PANEL	1
9	UNISTRUT P7000		2
10	DE2084-20	PARTITION	1

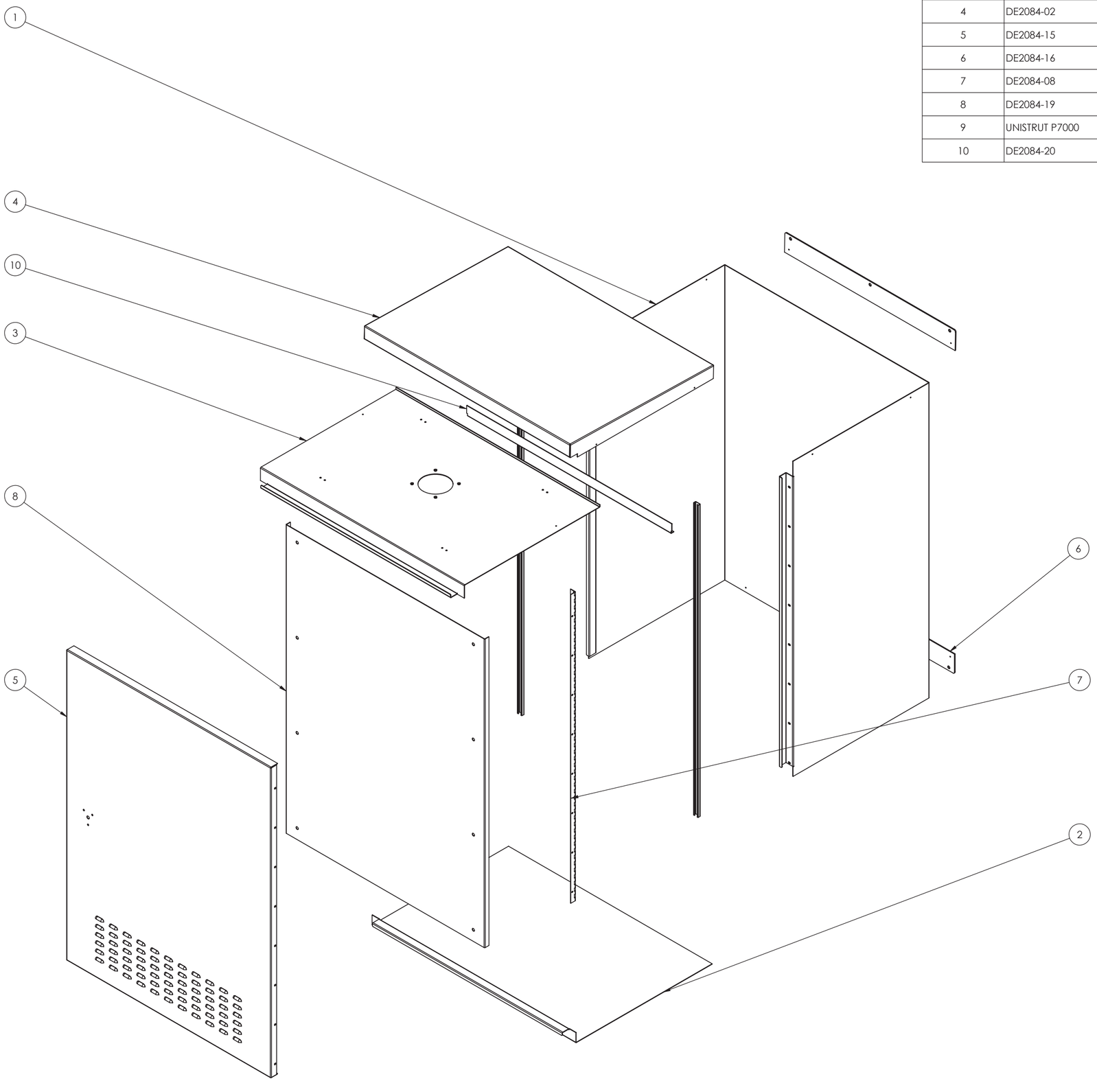

REVISION		NAME	DATE
	DRAWN		26/03/2018
	CHECKED		
	ENG APPR.		
MATERIAL	UNSPECIFIED TOLERANCES (INCH)		PROJECTION
FINISH	FRACTION ±1/32 1 PLACE DECIMAL ±.020 2 PLACE DECIMAL ±.010 3 PLACE DECIMAL ±.005 4 PLACE DECIMAL ±.001 ANGLES ±1°		THIRD ANGLE

DEMA
INDUSTRIES LIMITED

TITLE: GANTRY ELECTRICAL CABINET — REV

SIZE C | DRAWING NO. DE2084

SCALE 1 : 10 | UNIT INCH | SHEET 2 OF 24

REV
DE2084
C

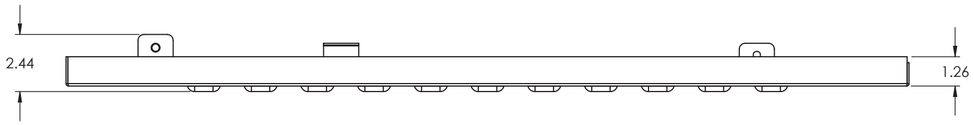

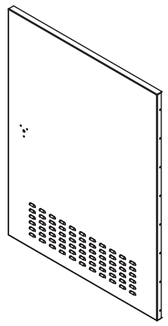

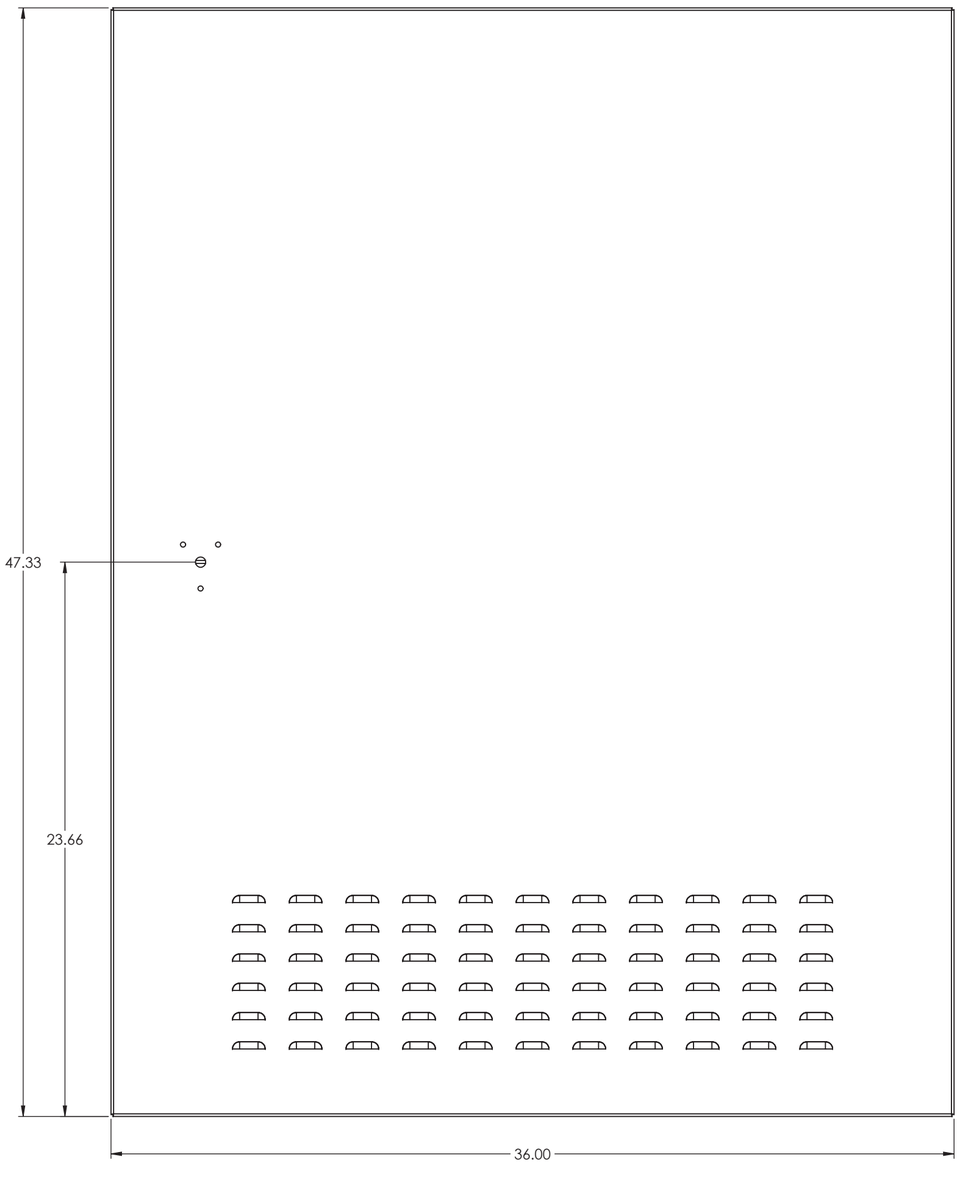

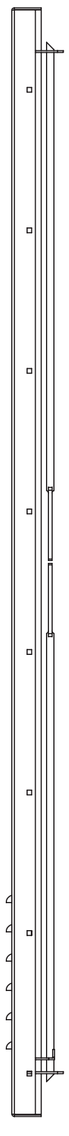

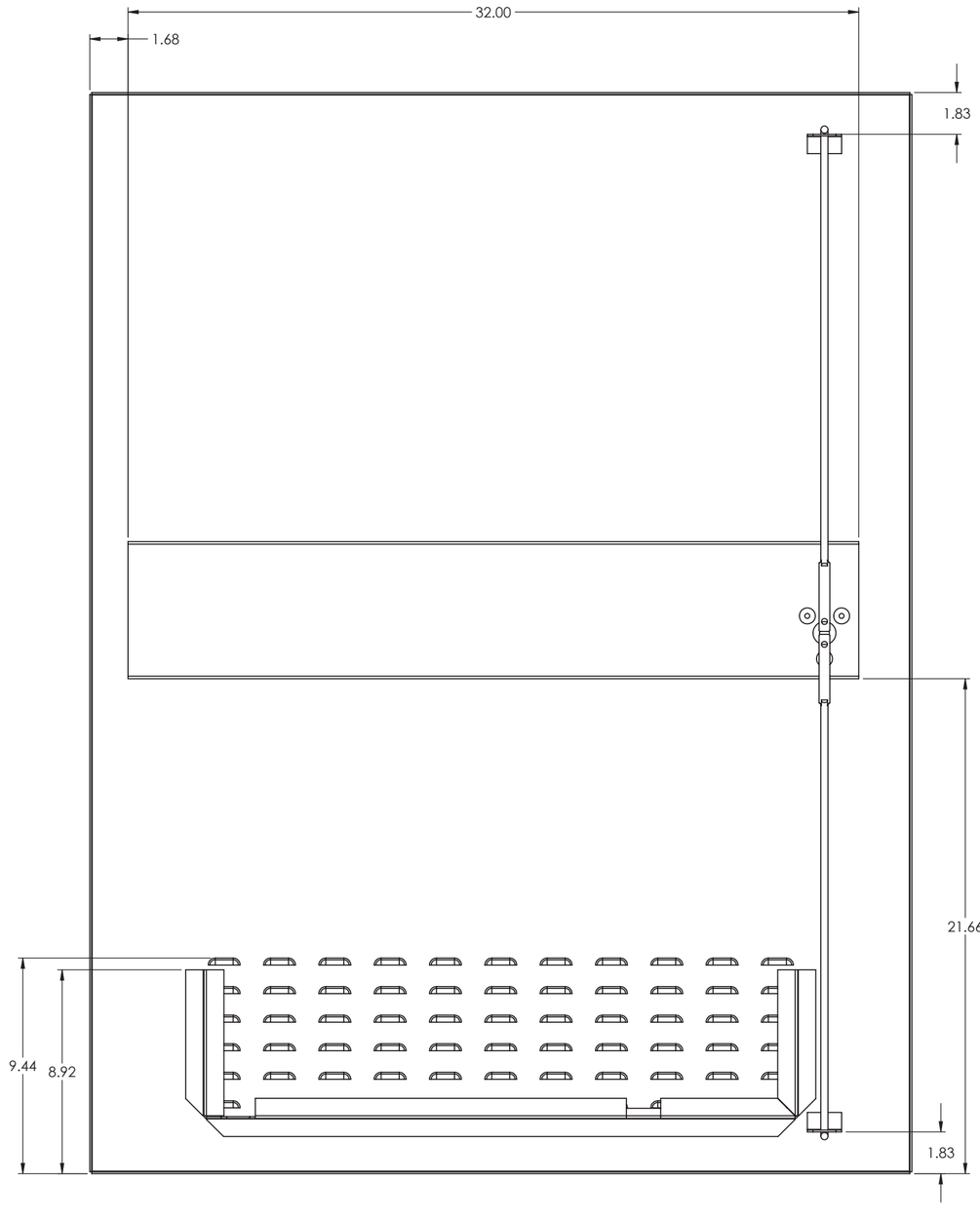

REVISION		NAME	DATE	DEMA INDUSTRIES LIMITED	
	DRAWN		26/03/2018		
	CHECKED				
	ENG APPR.			TITLE: DOOR ASSEMBLY	REV
MATERIAL	UNSPECIFIED TOLERANCES (INCH)		PROJECTION		
FINISH	FRACTION ±1/32 1 PLACE DECIMAL ±.020 2 PLACE DECIMAL ±.010 3 PLACE DECIMAL ±.005 4 PLACE DECIMAL ±.001 ANGLES ±1°		THIRD ANGLE	SIZE C	DRAWING NO. DE2084-15
				SCALE 1 : 5	UNIT INCH SHEET 3 OF 24

REV
DE2084-15
C

ITEM NO.	PART NUMBER	DESCRIPTION	QTY.
1	DE2084-13	CABINET DOOR	1
2	DE2084-07	FRONT DOOR LOCK MOUNT PLATE ASSEM	1
3	DE2084-12	FILTER HOLDING BRACKET	1
4	DE2084-05	LOCK MECHANISM GUIDE	2
5	DE2084-09	DOOR LATCH ROD	2

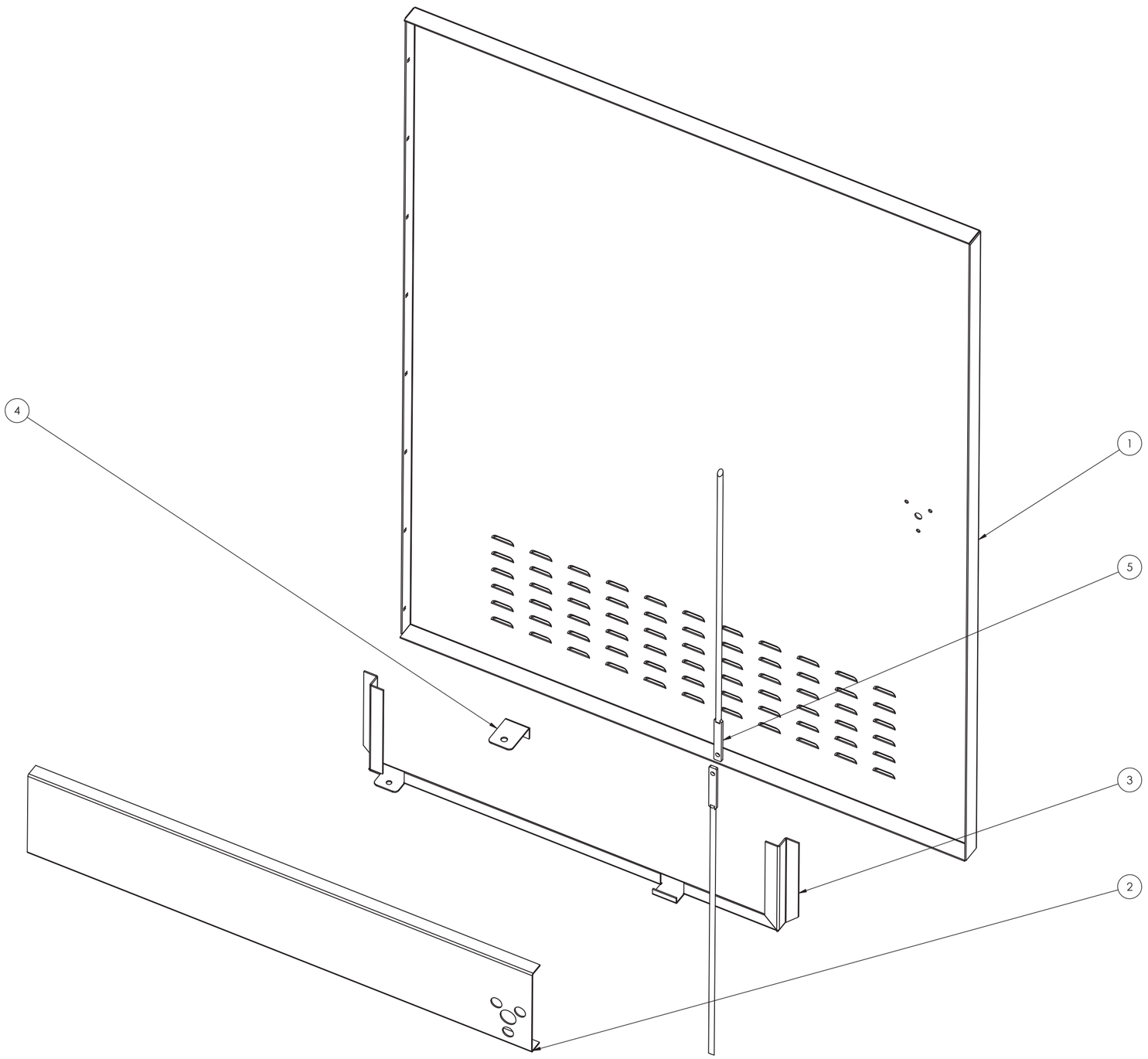

REVISION		NAME	DATE	DEMA INDUSTRIES LIMITED
	DRAWN		26/03/2018	
	CHECKED			
	ENG APPR.			TITLE: DE2084-15 — REV
MATERIAL	UNSPECIFIED TOLERANCES (INCH)		PROJECTION	
FINISH	FRACTION ±1/32; 1 PLACE DECIMAL ±.020; 2 PLACE DECIMAL ±.010; 3 PLACE DECIMAL ±.005; 4 PLACE DECIMAL ±.001; ANGLES ±1°		THIRD ANGLE	SIZE C — DRAWING NO. DOOR ASSEMBLY
				SCALE 1 : 5 — UNIT INCH — SHEET 4 OF 24

REV
DE2084-15
C

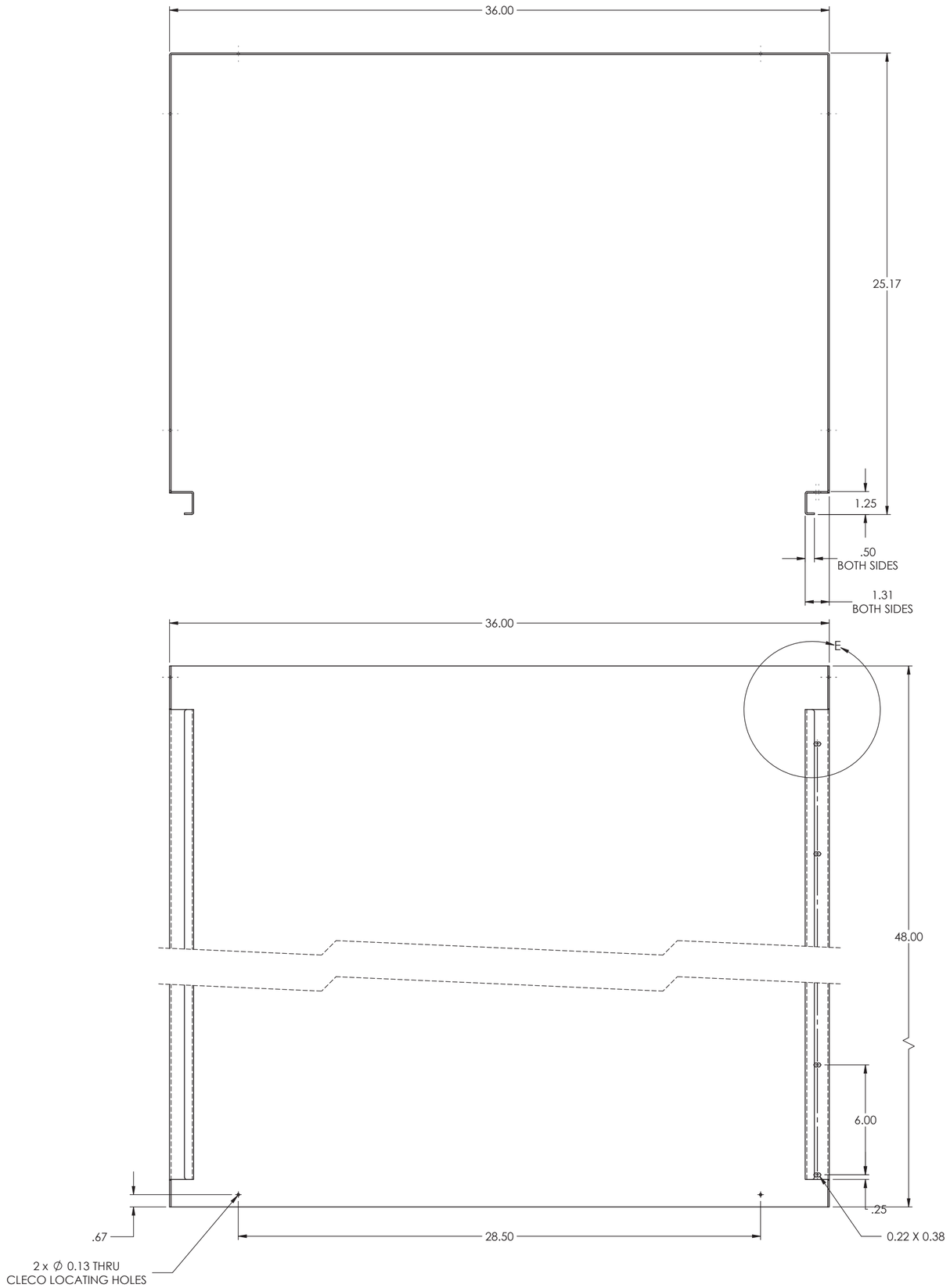

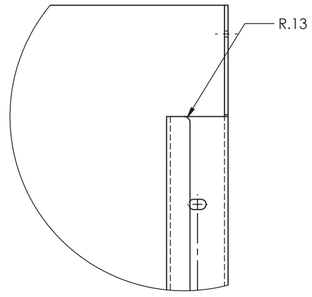

DETAIL E
SCALE 2 : 5

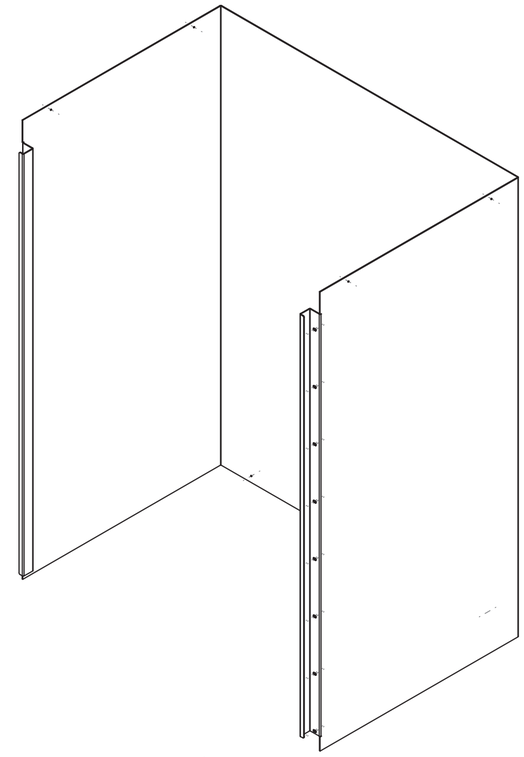

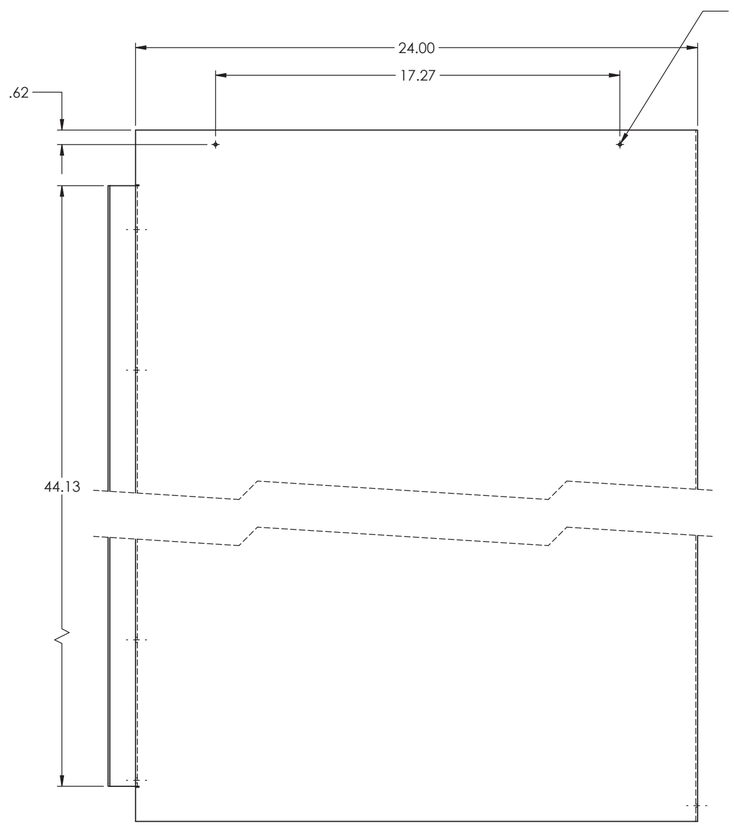

REVISION		NAME	DATE
	DRAWN	M.Boudagian	26/03/2018
	CHECKED		
	ENG APPR.		
MATERIAL	UNSPECIFIED TOLERANCES (INCH)		PROJECTION
FINISH	FRACTION ±1/32 1 PLACE DECIMAL ±.020 2 PLACE DECIMAL ±.010 3 PLACE DECIMAL ±.005 4 PLACE DECIMAL ±.001 ANGLES ±1°		THIRD ANGLE

DEMA
INDUSTRIES LIMITED

TITLE	CABINET HOUSING	REV
SIZE C	DRAWING NO. DE2084-01	
SCALE 1 : 5	UNIT INCH	SHEET 5 OF 24

REV
DE2084-01
C

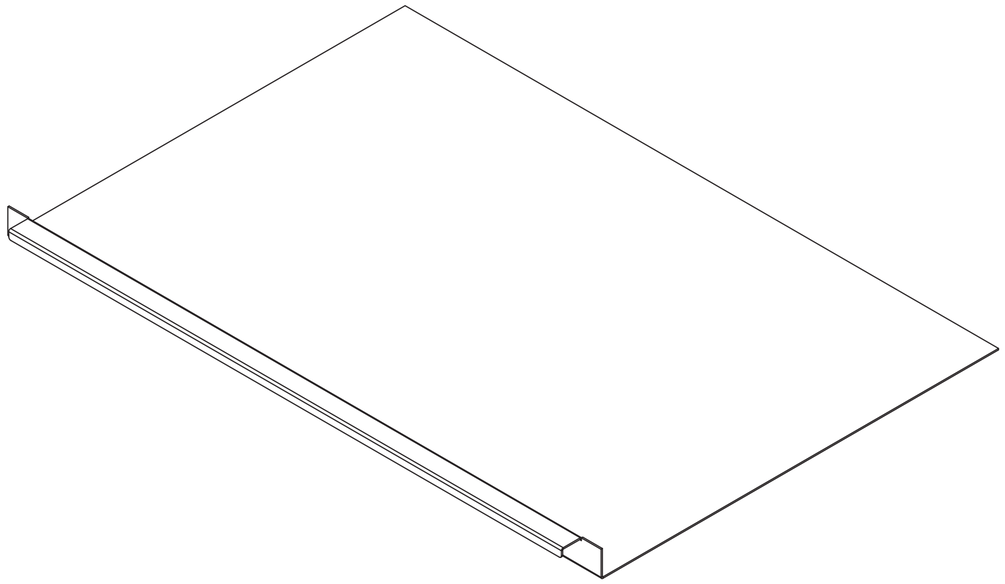

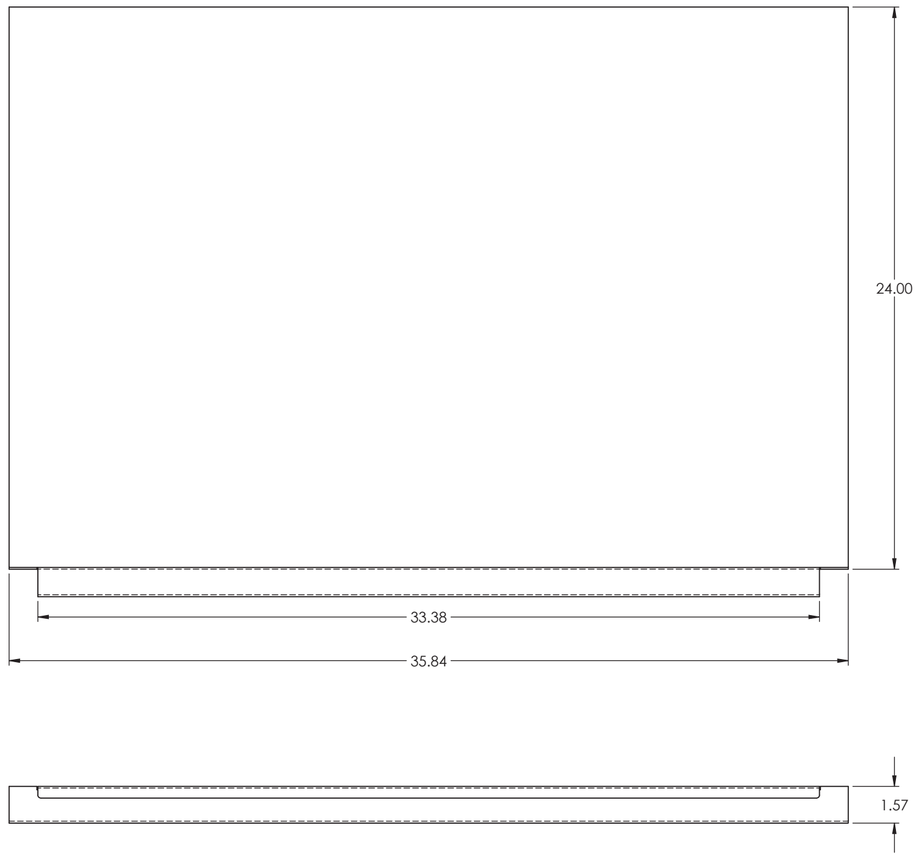

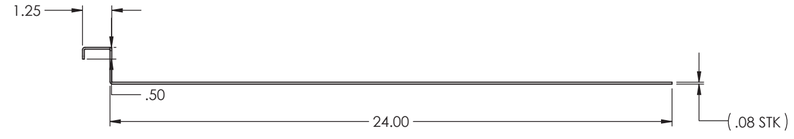

REVISION		NAME	DATE	DEMA INDUSTRIES LIMITED
	DRAWN		26/03/2018	
	CHECKED			
	ENG APPR.			TITLE: BOTTOM PLATE — REV
MATERIAL	UNSPECIFIED TOLERANCES (INCH)		PROJECTION	
FINISH	FRACTION ±1/32; 1 PLACE DECIMAL ±.020; 2 PLACE DECIMAL ±.010; 3 PLACE DECIMAL ±.005; 4 PLACE DECIMAL ±.001; ANGLES ±1°		THIRD ANGLE	SIZE C — DRAWING NO. DE2084-11
				SCALE 1 : 5 — UNIT INCH — SHEET 8 OF 24

REV
DE2084-11

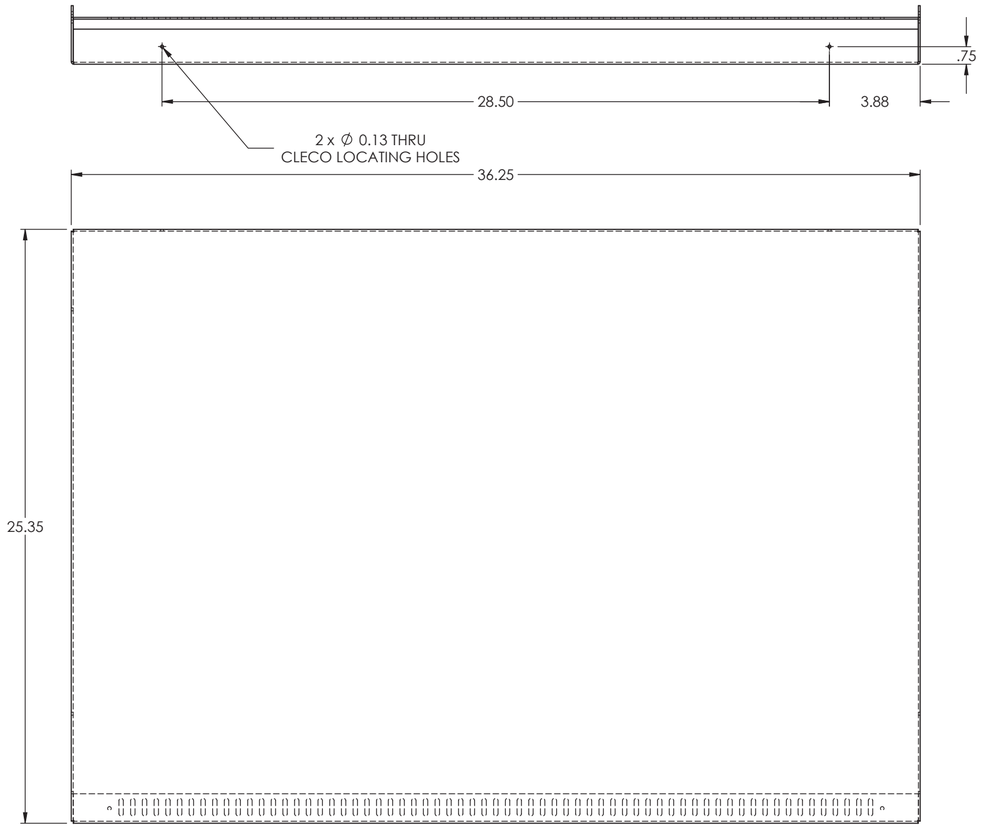

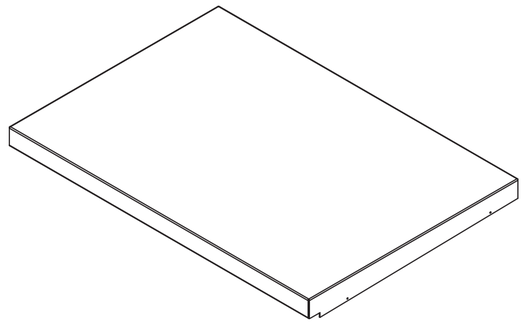

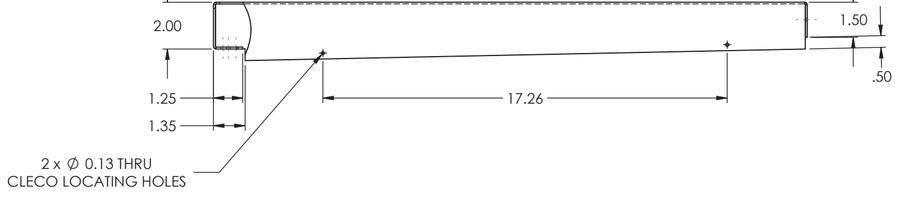

REVISION		NAME	DATE
	DRAWN		26/03/2018
	CHECKED		
	ENG APPR.		
MATERIAL	UNSPECIFIED TOLERANCES (INCH)		PROJECTION
FINISH	FRACTION ±1/32 1 PLACE DECIMAL ±.020 2 PLACE DECIMAL ±.010 3 PLACE DECIMAL ±.005 4 PLACE DECIMAL ±.001 ANGLES ±1°		THIRD ANGLE

DEMA
INDUSTRIES LIMITED

TITLE: CABINET TOP COVER — REV

SIZE C | DRAWING NO. DE2084-02

SCALE 1 : 5 | UNIT INCH | SHEET 10 OF 24

REV
DE2084-02
C

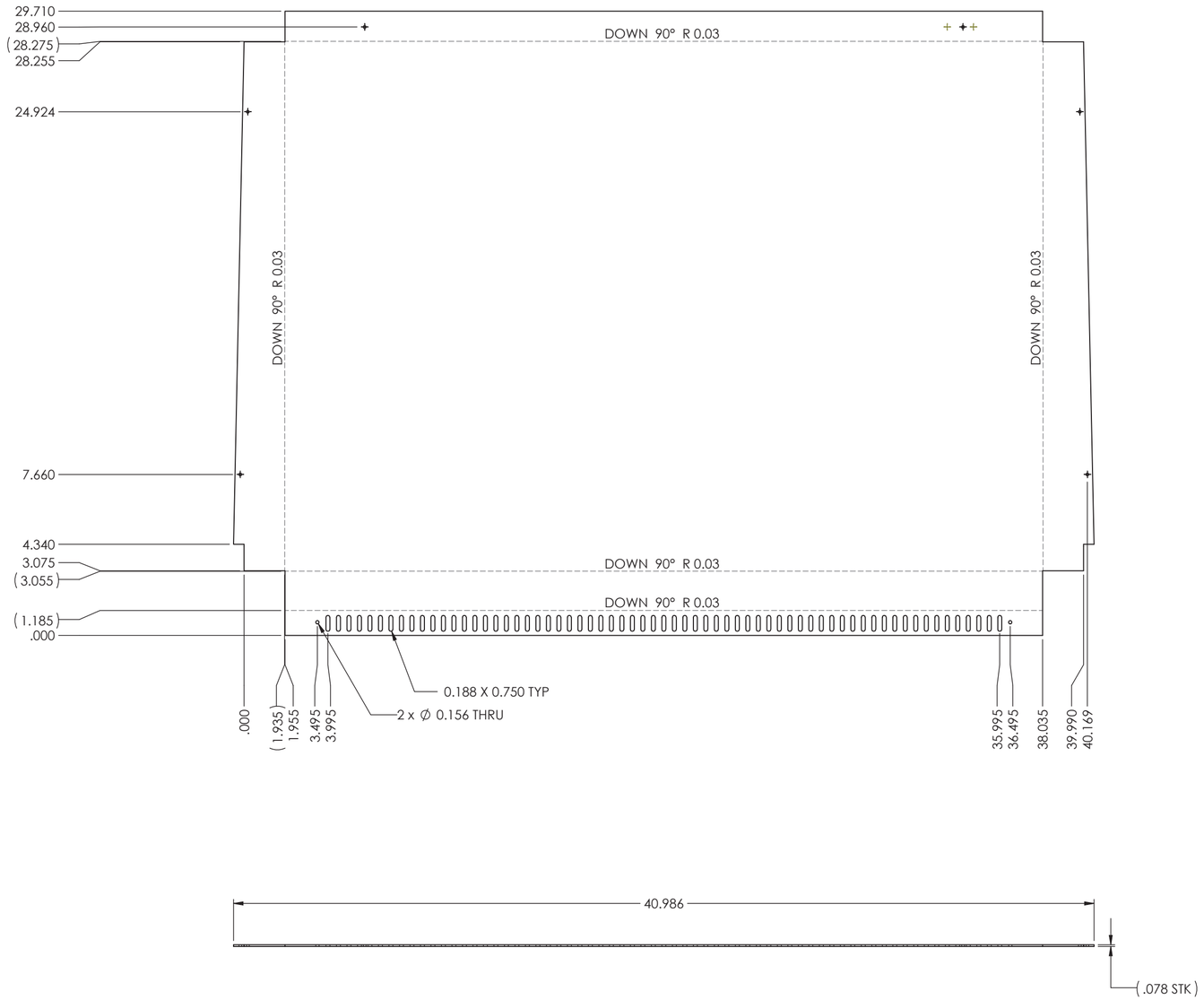

REVISION		NAME	DATE	DEMA INDUSTRIES LIMITED	
	DRAWN		26/03/2018		
	CHECKED				
	ENG APPR.			TITLE CABINET TOP COVER	REV
MATERIAL	UNSPECIFIED TOLERANCES (INCH)		PROJECTION		
FINISH	FRACTION ±1/32 1 PLACE DECIMAL ±.020 2 PLACE DECIMAL ±.010 3 PLACE DECIMAL ±.005 4 PLACE DECIMAL ±.001 ANGLES ±1°		THIRD ANGLE	SIZE C DRAWING NO. DE2084-02	
				SCALE 1 : 5 UNIT INCH SHEET 11 OF 24	

REV
DE2084-02
C

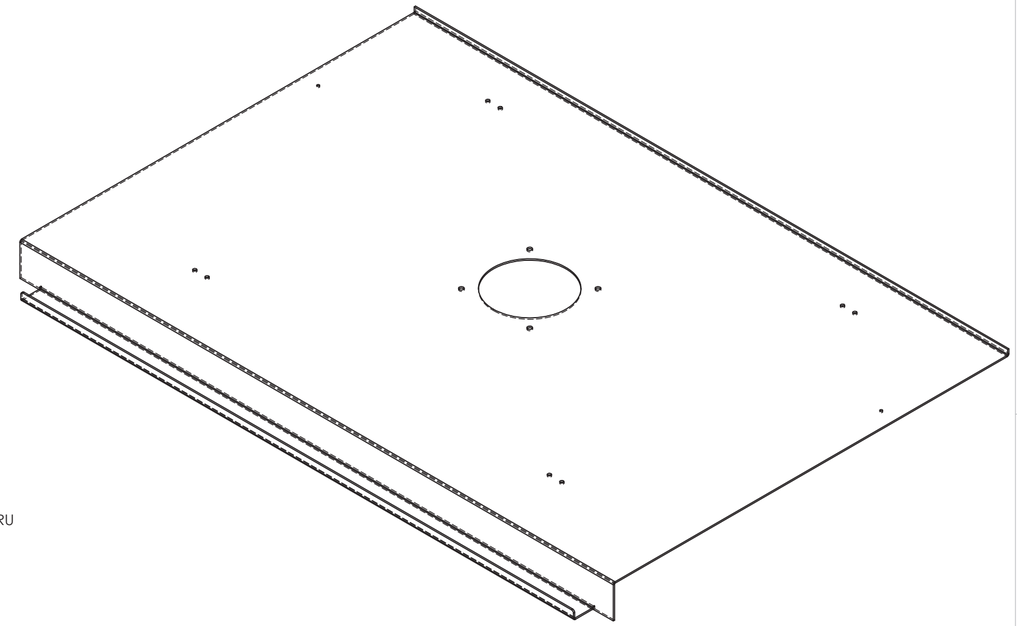

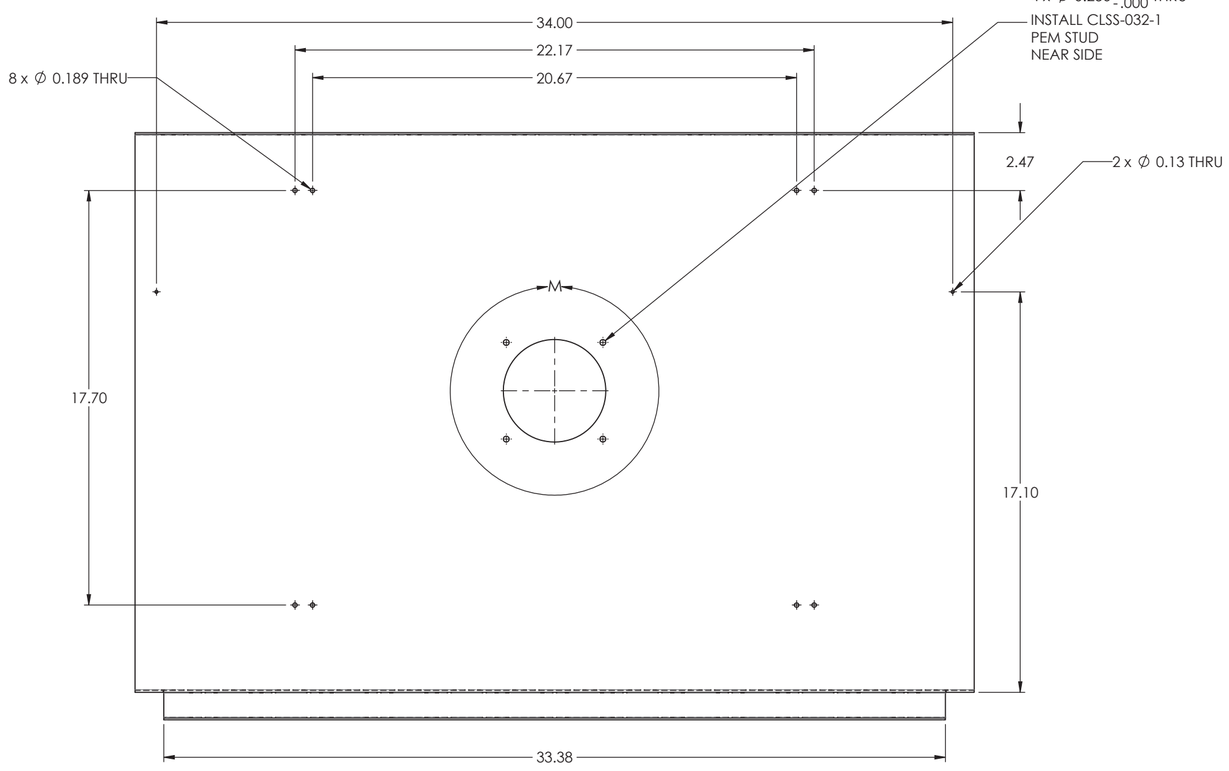

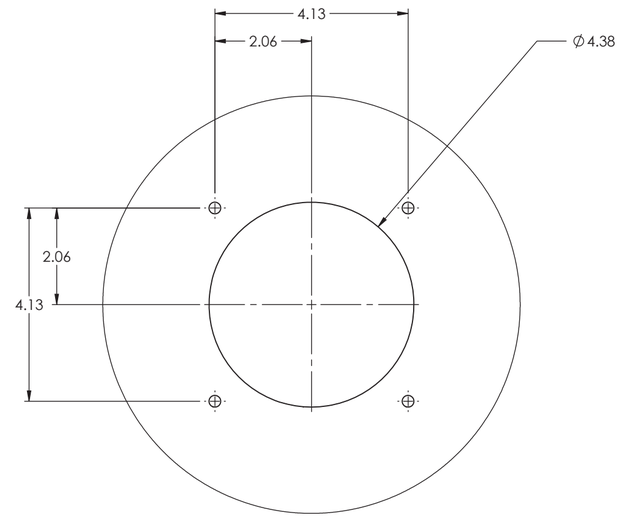

DETAIL M
SCALE 2 : 5

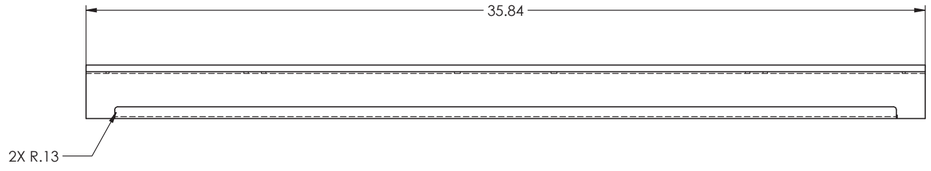

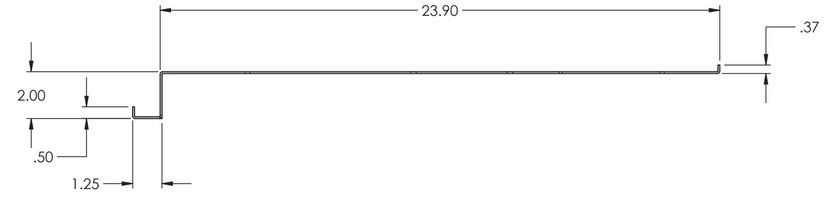

REVISION		NAME	DATE	DEMA INDUSTRIES LIMITED	
	DRAWN		26/03/2018		
	CHECKED				
	ENG APPR.			TITLE: TOP ANGLE PLATE	REV
MATERIAL	UNSPECIFIED TOLERANCES (INCH)		PROJECTION		
FINISH	FRACTION ±1/32 1 PLACE DECIMAL ±.020 2 PLACE DECIMAL ±.010 3 PLACE DECIMAL ±.005 4 PLACE DECIMAL ±.001 ANGLES ±1°		THIRD ANGLE	SIZE C	DRAWING NO. DE2084-03
				SCALE 1 : 5	UNIT INCH SHEET 12 OF 24

REV
DE2084-03
C

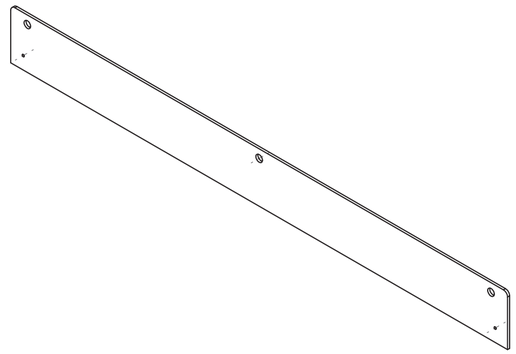

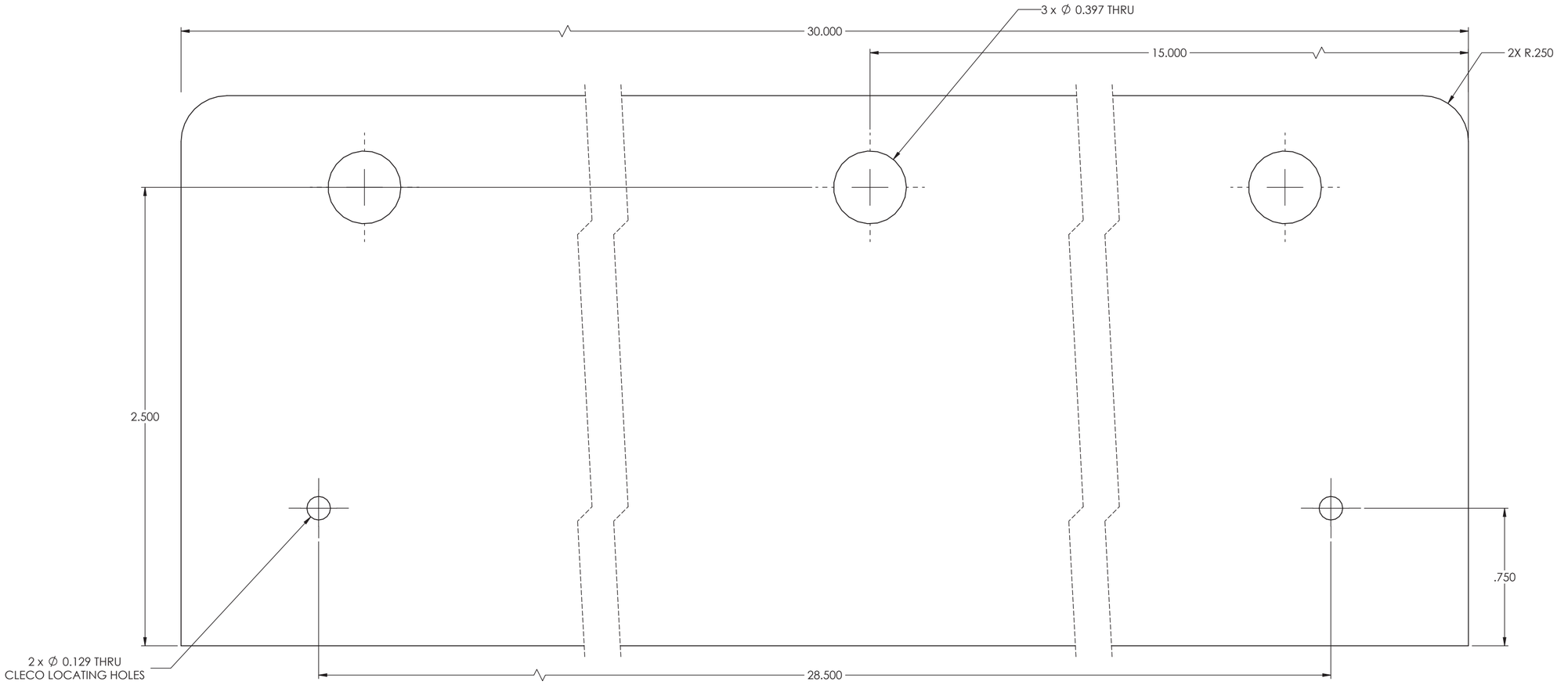

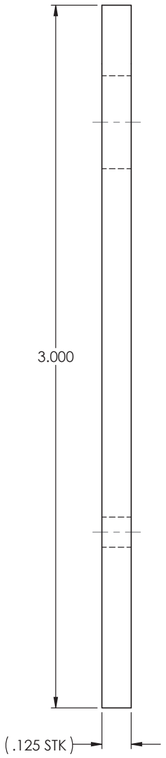

REVISION		NAME	DATE	DEMA INDUSTRIES LIMITED	
	DRAWN		26/03/2018		
	CHECKED				
	ENG APPR.			TITLE MOUNTING TAB	REV
MATERIAL	UNSPECIFIED TOLERANCES (INCH)		PROJECTION		
FINISH	FRACTION ±1/32 1 PLACE DECIMAL ±.020 2 PLACE DECIMAL ±.010 3 PLACE DECIMAL ±.005 4 PLACE DECIMAL ±.001 ANGLES ±1°		THIRD ANGLE	SIZE C DRAWING NO. DE2084-16	
				SCALE 2 : 1 UNIT INCH SHEET 14 OF 24	

REV
DE2084-16
C

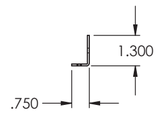

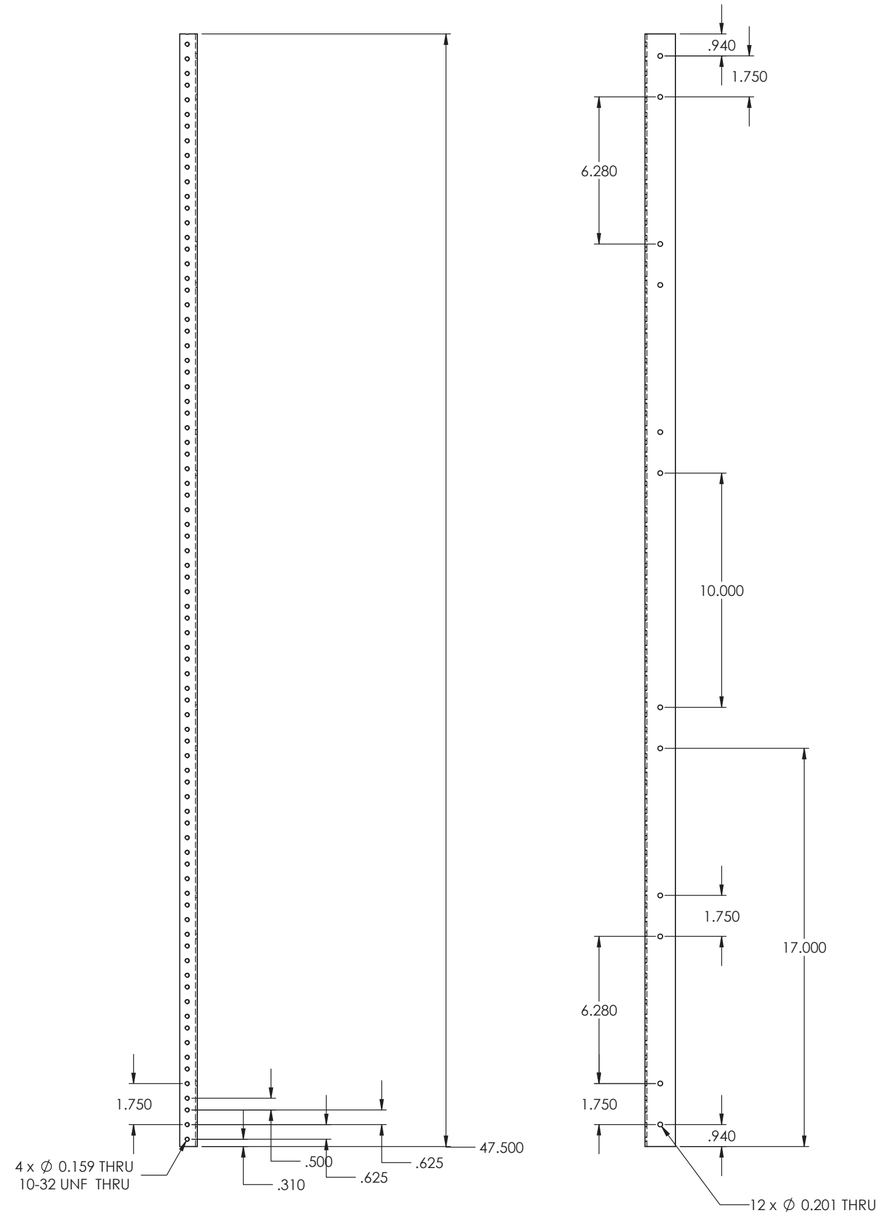

NOTE: DE2082-14-1 SAME BUT OPPOSITE BENDS

REVISION		NAME	DATE
	DRAWN		26/03/2018
	CHECKED		
	ENG APPR.		
MATERIAL	UNSPECIFIED TOLERANCES (INCH)		PROJECTION
FINISH	FRACTION ±1/32 1 PLACE DECIMAL ±.020 2 PLACE DECIMAL ±.010 3 PLACE DECIMAL ±.005 4 PLACE DECIMAL ±.001 ANGLES ±1°		THIRD ANGLE

DEMA
INDUSTRIES LIMITED

TITLE: EIA "L" SERIES — REV

SIZE C | DRAWING NO. DE2084-14

SCALE 1 : 5 | UNIT INCH | SHEET 16 OF 24

REV
DE2084-14
C

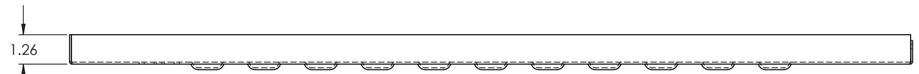

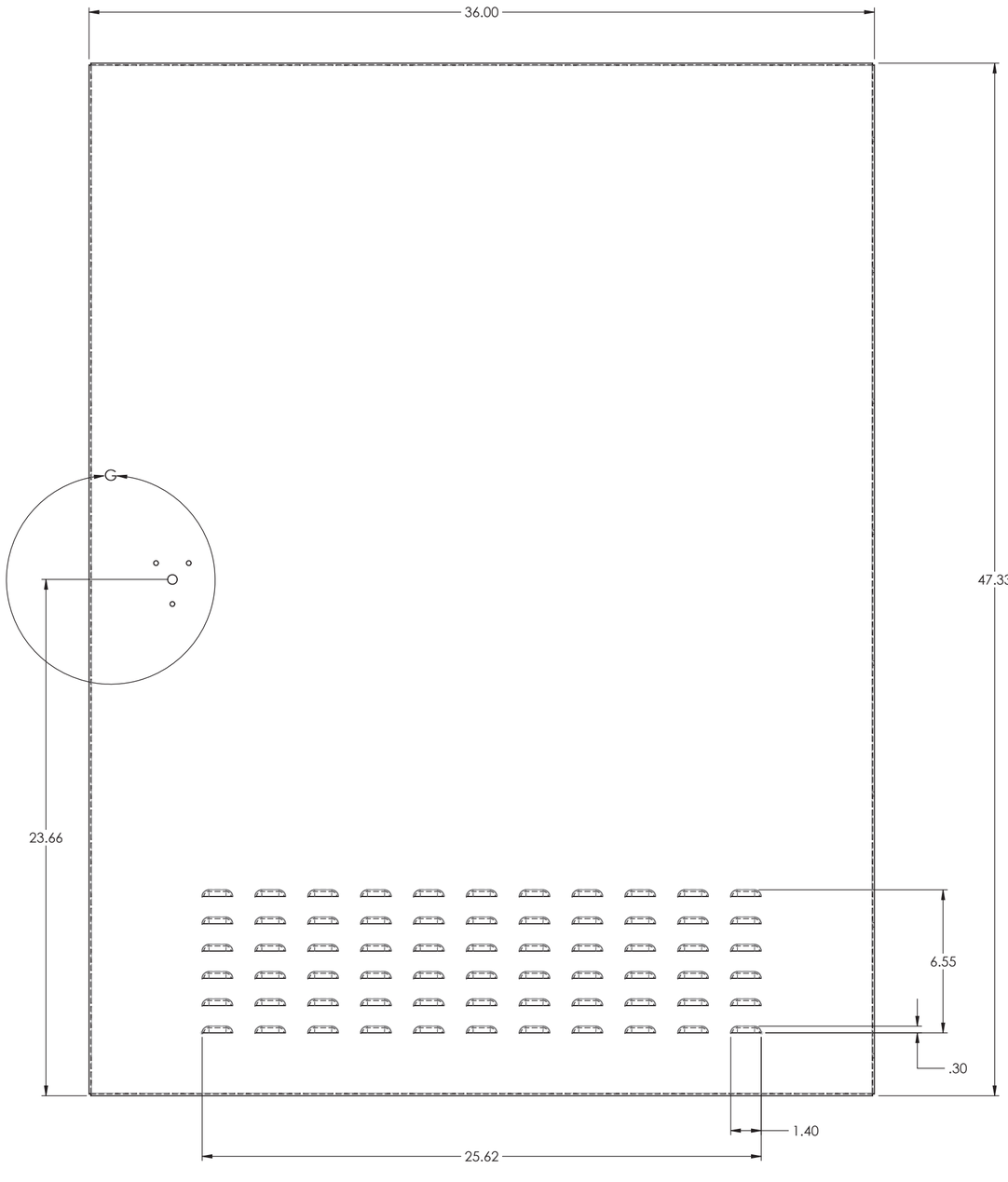

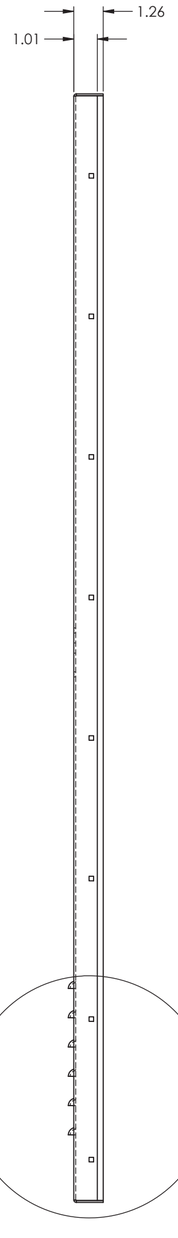

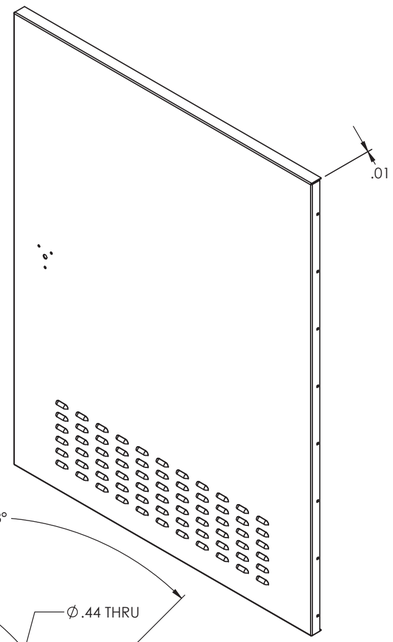

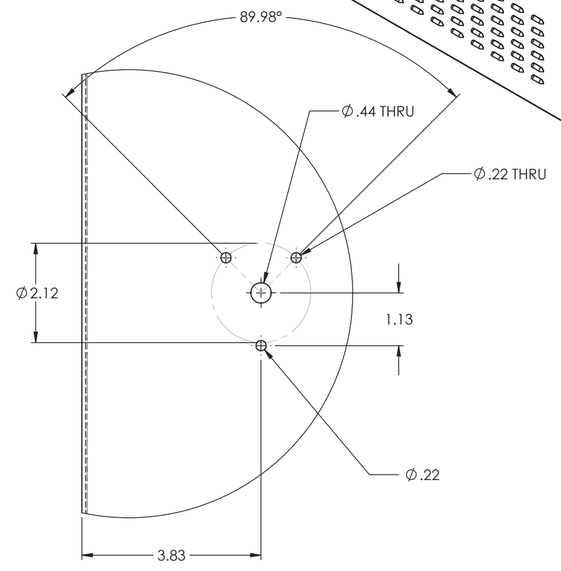

DETAIL G
SCALE 2 : 5

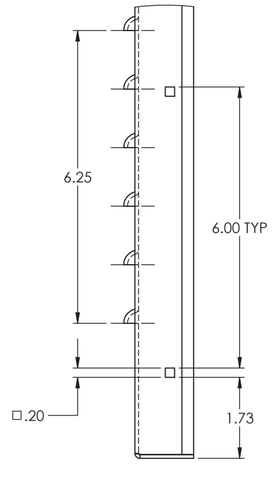

DETAIL I
SCALE 2 : 5

REVISION		NAME	DATE
	DRAWN		26/03/2018
	CHECKED		
	ENG APPR.		
MATERIAL	UNSPECIFIED TOLERANCES (INCH)		PROJECTION
FINISH	FRACTION ±1/32 1 PLACE DECIMAL ± .020 2 PLACE DECIMAL ± .010 3 PLACE DECIMAL ± .005 4 PLACE DECIMAL ± .001 ANGLES ±1°		THIRD ANGLE

DEMA
INDUSTRIES LIMITED

TITLE: CABINET DOOR — REV:

SIZE: C — DRAWING NO.: DE2084-13

SCALE 1 : 5 — UNIT INCH — SHEET 17 OF 24

REV
DE2084-13
C

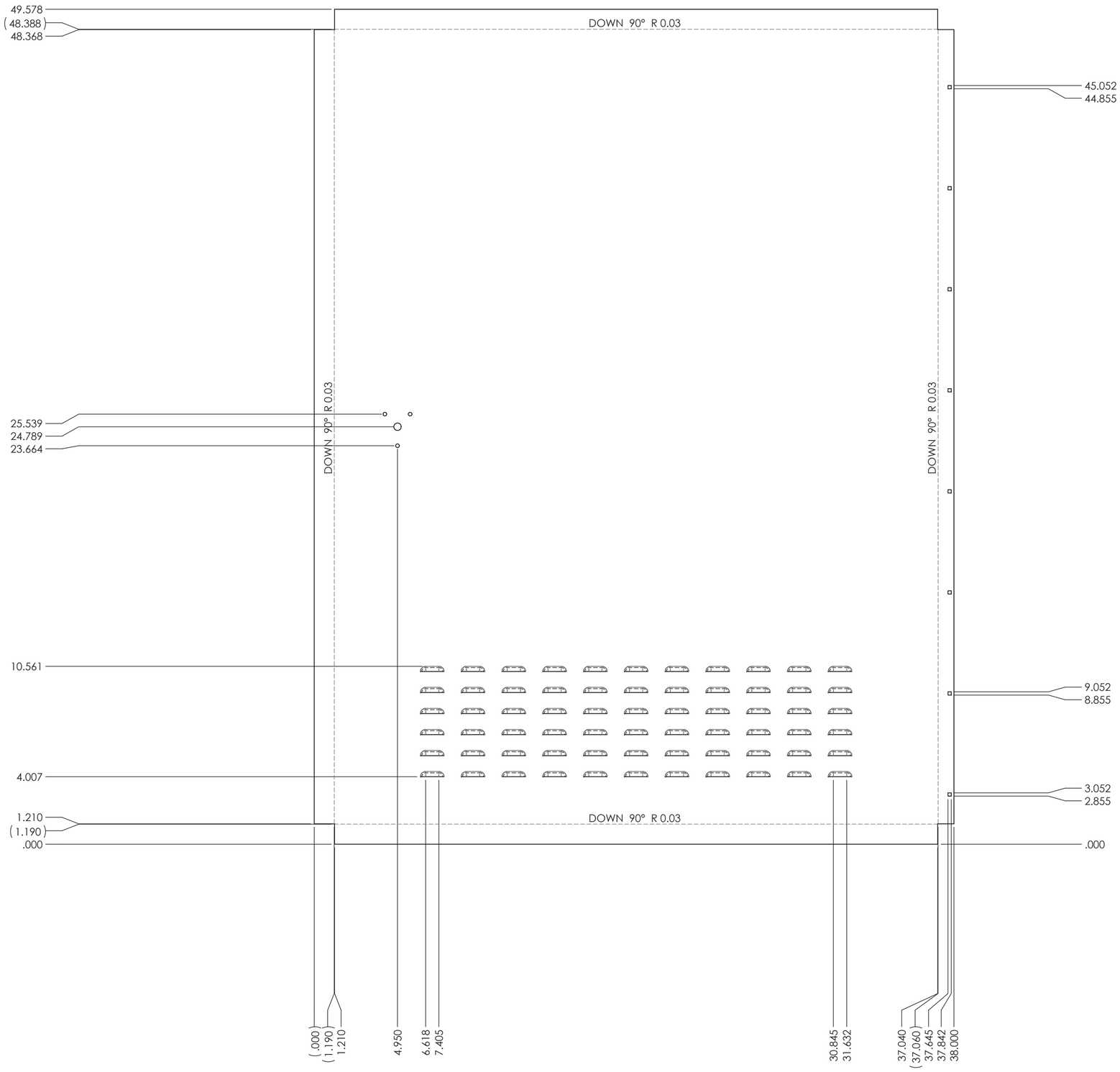

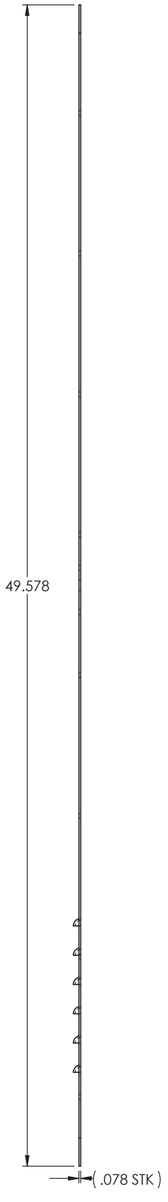

REVISION		NAME	DATE	DEMA INDUSTRIES LIMITED
	DRAWN		26/03/2018	
	CHECKED			
	ENG APPR.			TITLE: CABINET DOOR — REV
MATERIAL	UNSPECIFIED TOLERANCES (INCH)		PROJECTION	SIZE C — DRAWING NO. DE2084-13
FINISH	FRACTION ±1/32; 1 PLACE DECIMAL ±.020; 2 PLACE DECIMAL ±.010; 3 PLACE DECIMAL ±.005; 4 PLACE DECIMAL ±.001; ANGLES ±1°		THIRD ANGLE	SCALE 1 : 5 — UNIT INCH — SHEET 18 OF 24

REV
DE2084-13
C

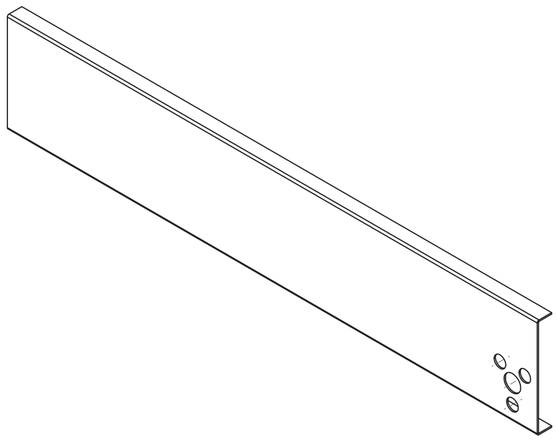

REVISION		NAME	DATE	DEMA INDUSTRIES LIMITED
	DRAWN		26/03/2018	
	CHECKED			
	ENG APPR.			TITLE: FRONT DOOR LOCK MOUNT PLATE ASSEM — REV
MATERIAL	UNSPECIFIED TOLERANCES (INCH)		PROJECTION	
FINISH	FRACTION ±1/32; 1 PLACE DECIMAL ±.020; 2 PLACE DECIMAL ±.010; 3 PLACE DECIMAL ±.005; 4 PLACE DECIMAL ±.001; ANGLES ±1°		THIRD ANGLE	SIZE C — DRAWING NO. DE2084-07
				SCALE 1 : 2 — UNIT INCH — SHEET 19 OF 24

REV C — DE2084-07

REVISION		NAME	DATE	DEMA INDUSTRIES LIMITED
	DRAWN		26/03/2018	
	CHECKED			
	ENG APPR.			TITLE: FRONT DOOR LOCK MOUNT PLATE ASSEM — REV
MATERIAL	UNSPECIFIED TOLERANCES (INCH)		PROJECTION	SIZE C — DRAWING NO. DE2084-07
FINISH	FRACTION ±1/32; 1 PLACE DECIMAL ±.020; 2 PLACE DECIMAL ±.010; 3 PLACE DECIMAL ±.005; 4 PLACE DECIMAL ±.001; ANGLES ±1°		THIRD ANGLE	SCALE 1 : 2 — UNIT INCH — SHEET 20 OF 24

REV
DE2084-07
C

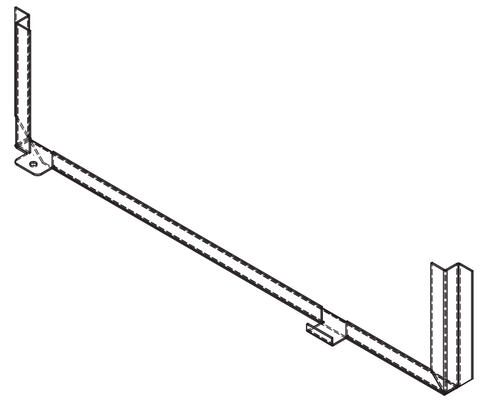

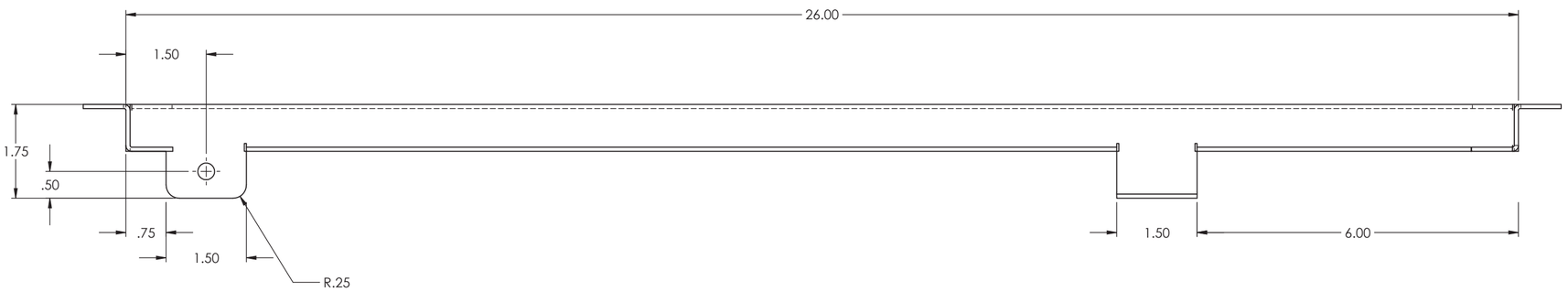

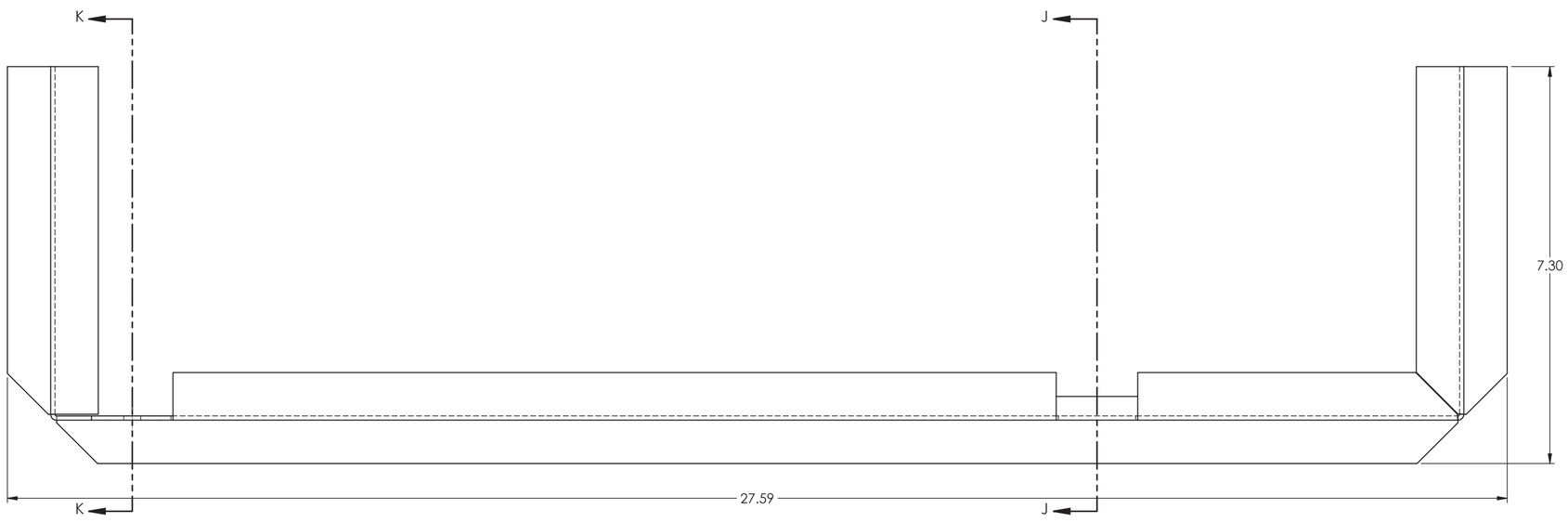

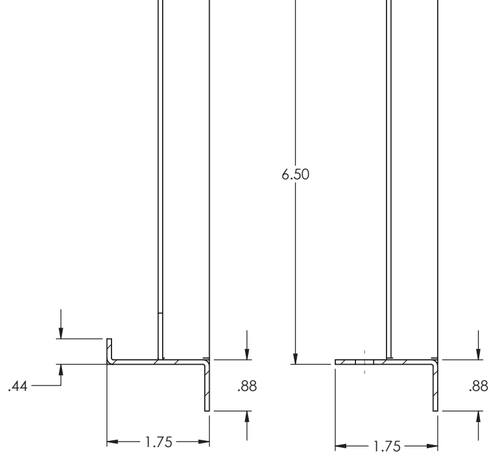

SECTION J-J
SCALE 1 : 2

SECTION K-K
SCALE 1 : 2

REVISION		NAME	DATE	DEMA INDUSTRIES LIMITED
	DRAWN		26/03/2018	
	CHECKED			
	ENG APPR.			TITLE: FILTER HOLDING BRACKET — REV
MATERIAL	UNSPECIFIED TOLERANCES (INCH)		PROJECTION	
FINISH	FRACTION ±1/32; 1 PLACE DECIMAL ±.020; 2 PLACE DECIMAL ±.010; 3 PLACE DECIMAL ±.005; 4 PLACE DECIMAL ±.001; ANGLES ±1°		THIRD ANGLE	SIZE C — DRAWING NO. DE2084-12
				SCALE 1 : 2 — UNIT INCH — SHEET 21 OF 24

REV
DE2084-12
C

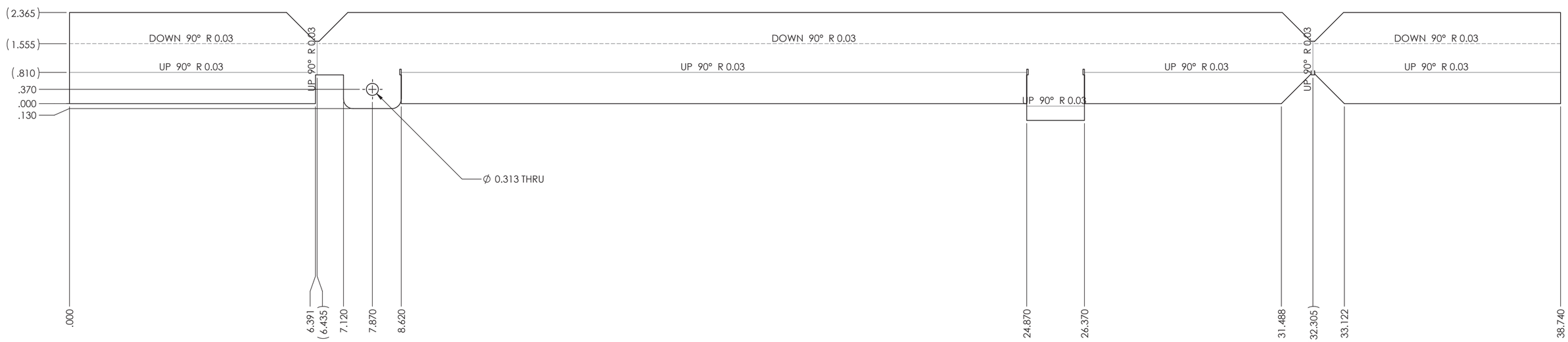

REVISION		NAME	DATE	DEMA INDUSTRIES LIMITED	
	DRAWN		26/03/2018		
	CHECKED				
	ENG APPR.			TITLE FILTER HOLDING BRACKET	REV
MATERIAL	UNSPECIFIED TOLERANCES (INCH)		PROJECTION		
FINISH	FRACTION ±1/32 1 PLACE DECIMAL ±.020 2 PLACE DECIMAL ±.010 3 PLACE DECIMAL ±.005 4 PLACE DECIMAL ±.001 ANGLES ±1°		THIRD ANGLE	SIZE C DRAWING NO. DE2084-12 SCALE 1 : 2 UNIT INCH SHEET 22 OF 24	

REV
DE2084-12
C

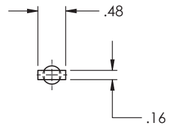

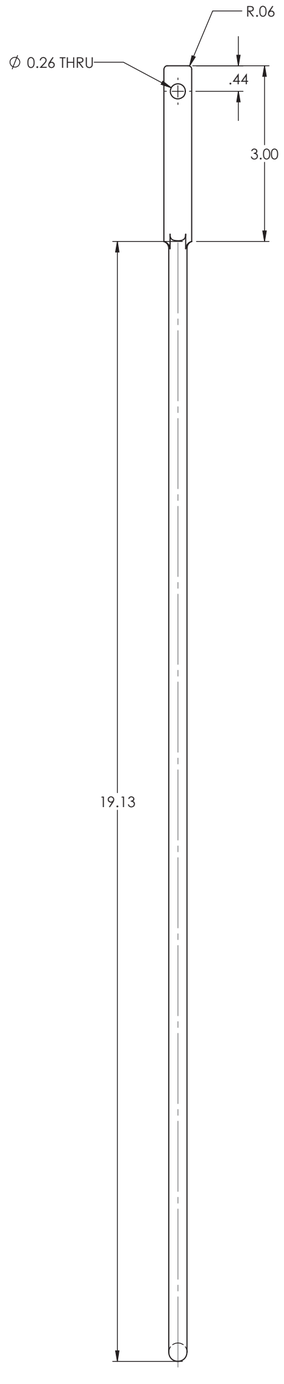

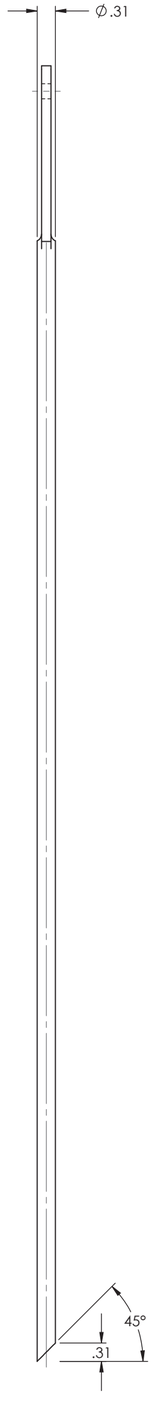

REVISION		NAME	DATE	DEMA INDUSTRIES LIMITED	
	DRAWN		26/03/2018		
	CHECKED				
	ENG APPR.			TITLE: DOOR LATCH ROD	REV
MATERIAL	UNSPECIFIED TOLERANCES (INCH)		PROJECTION		
FINISH	FRACTION ±1/32 1 PLACE DECIMAL ±.020 2 PLACE DECIMAL ±.010 3 PLACE DECIMAL ±.005 4 PLACE DECIMAL ±.001 ANGLES ±1°		THIRD ANGLE	SIZE C	DRAWING NO. DE2084-09
				SCALE 1 : 2	UNIT INCH SHEET 23 OF 24

REV
DE2084-09
C

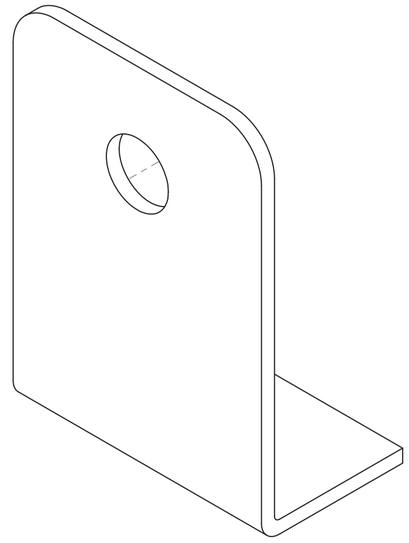

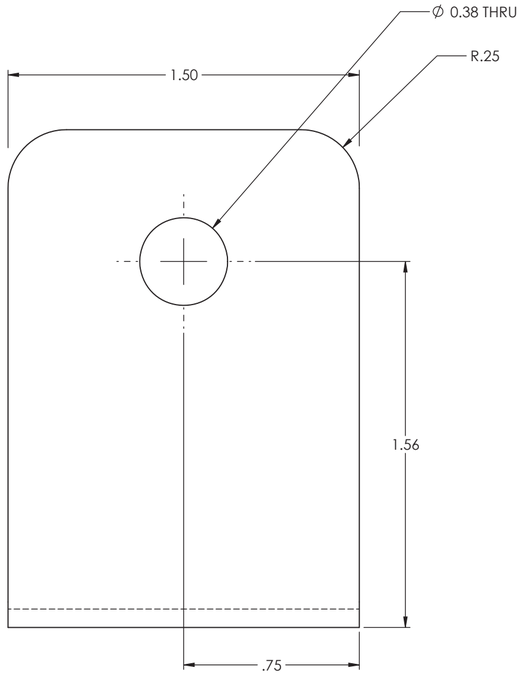

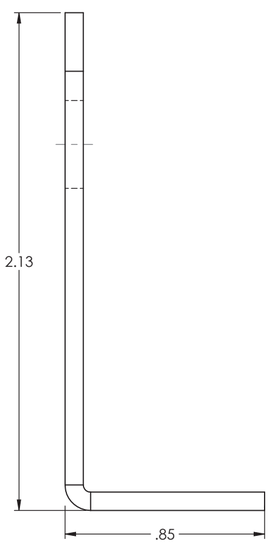

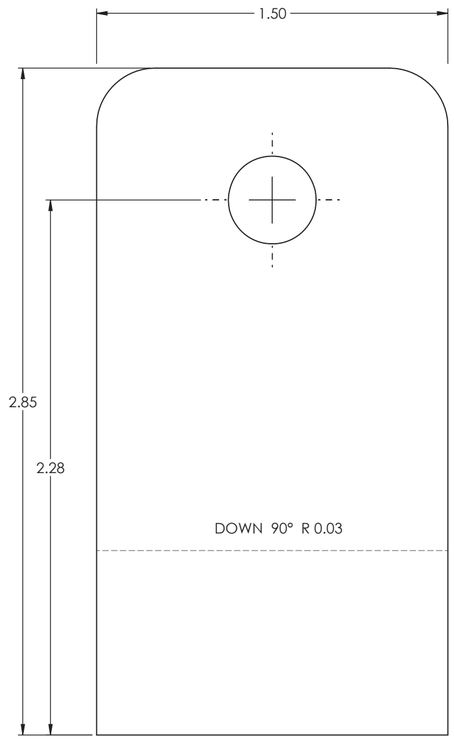

REVISION		NAME	DATE	DEMA INDUSTRIES LIMITED	
	DRAWN		26/03/2018		
	CHECKED				
	ENG APPR.			TITLE LOCK MECHANISM GUIDE	REV
MATERIAL	UNSPECIFIED TOLERANCES (INCH)		PROJECTION		
FINISH	FRACTION ±1/32 1 PLACE DECIMAL ± .020 2 PLACE DECIMAL ± .010 3 PLACE DECIMAL ± .005 4 PLACE DECIMAL ± .001 ANGLES ±1°		THIRD ANGLE	SIZE C DRAWING NO. DE2084-05	
				SCALE 2 : 1 UNIT INCH SHEET 24 OF 24	

REV C DE2084-05

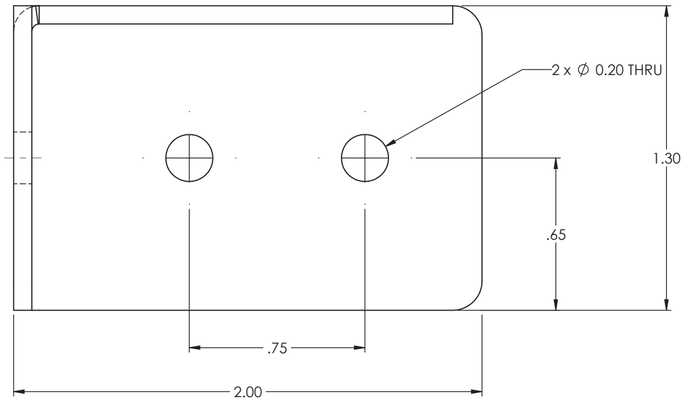

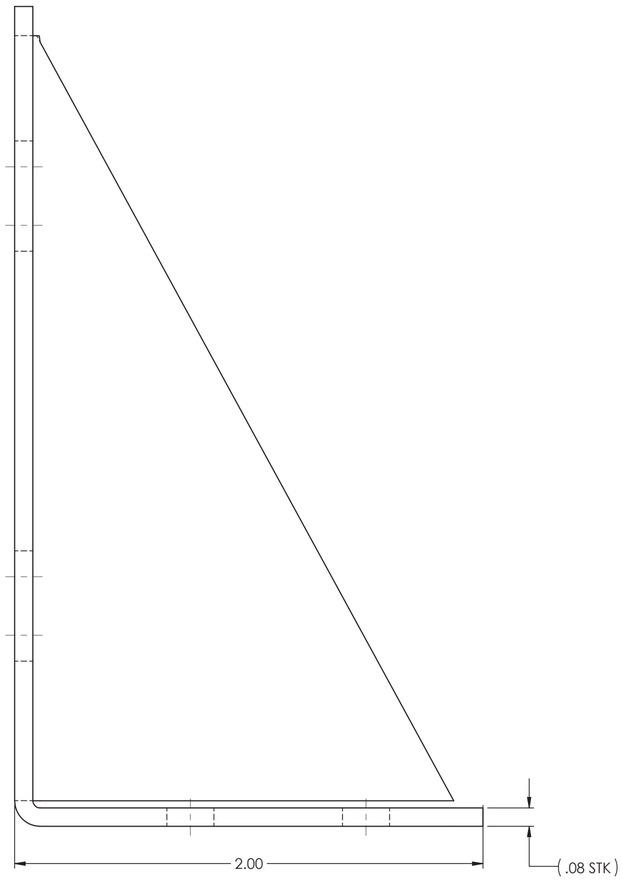

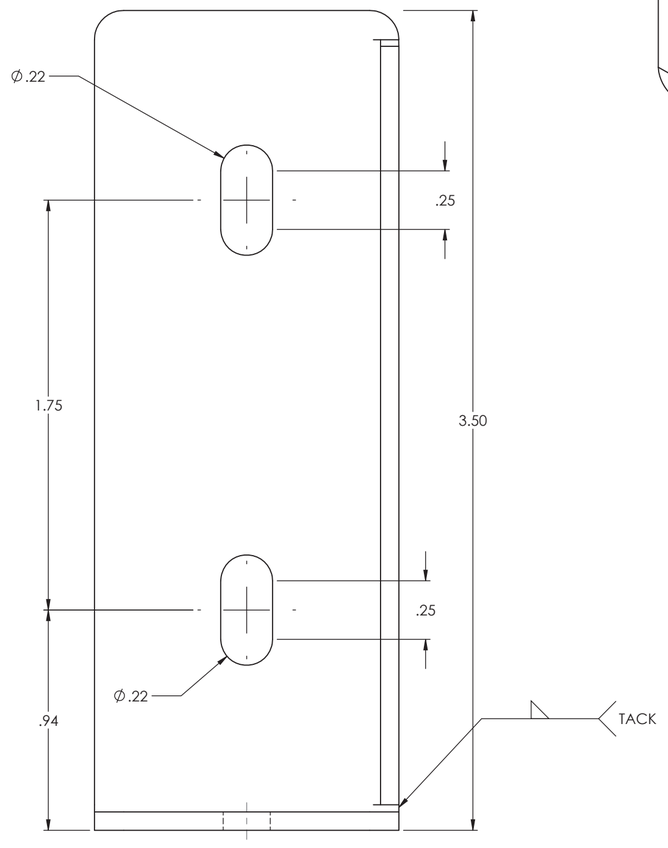

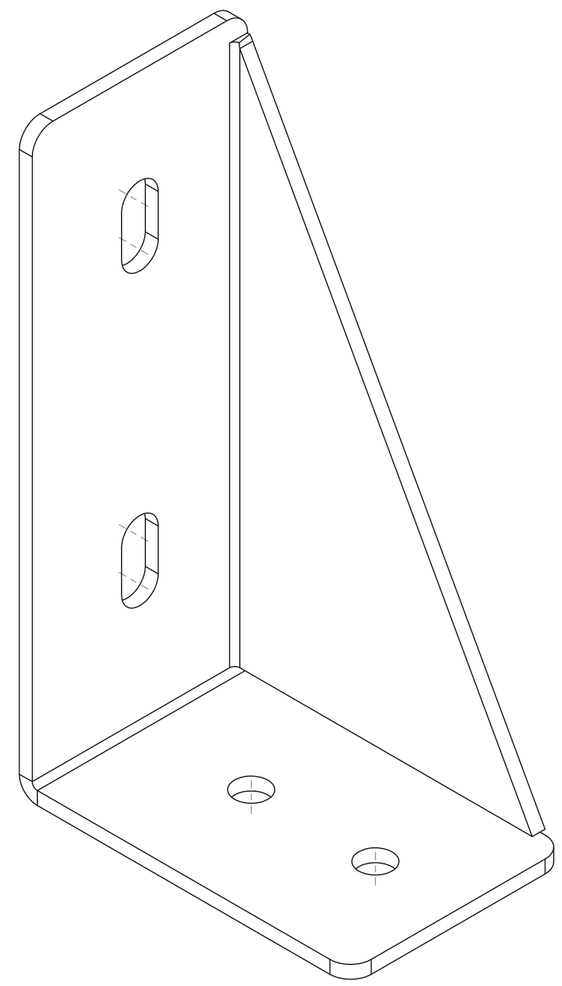

NOTE: DE2082-17-01 SAME BUT OPPOSITE BENDS

REVISION		NAME	DATE	DEMA INDUSTRIES LIMITED
	DRAWN		26/03/2018	
	CHECKED			
	ENG APPR.			TITLE: EIA SUPPORT BRACKET — REV
MATERIAL	UNSPECIFIED TOLERANCES (INCH)		PROJECTION	
FINISH	FRACTION ±1/32; 1 PLACE DECIMAL ±.020; 2 PLACE DECIMAL ±.010; 3 PLACE DECIMAL ±.005; 4 PLACE DECIMAL ±.001; ANGLES ±1°		THIRD ANGLE	SIZE C — DRAWING NO. DE2084-17
				SCALE 2 : 1 — UNIT INCH — SHEET 25 OF 25

REV
DE2084-17
C

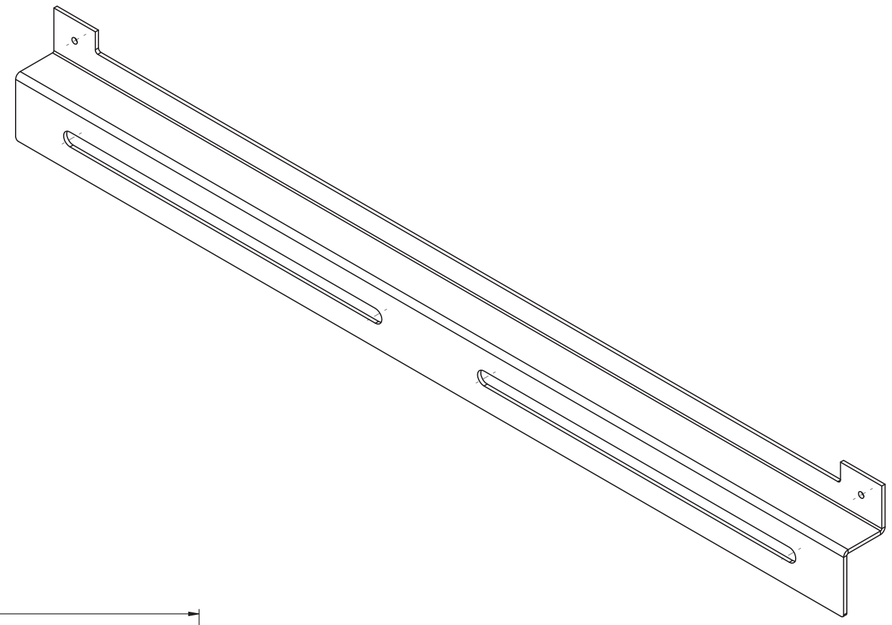

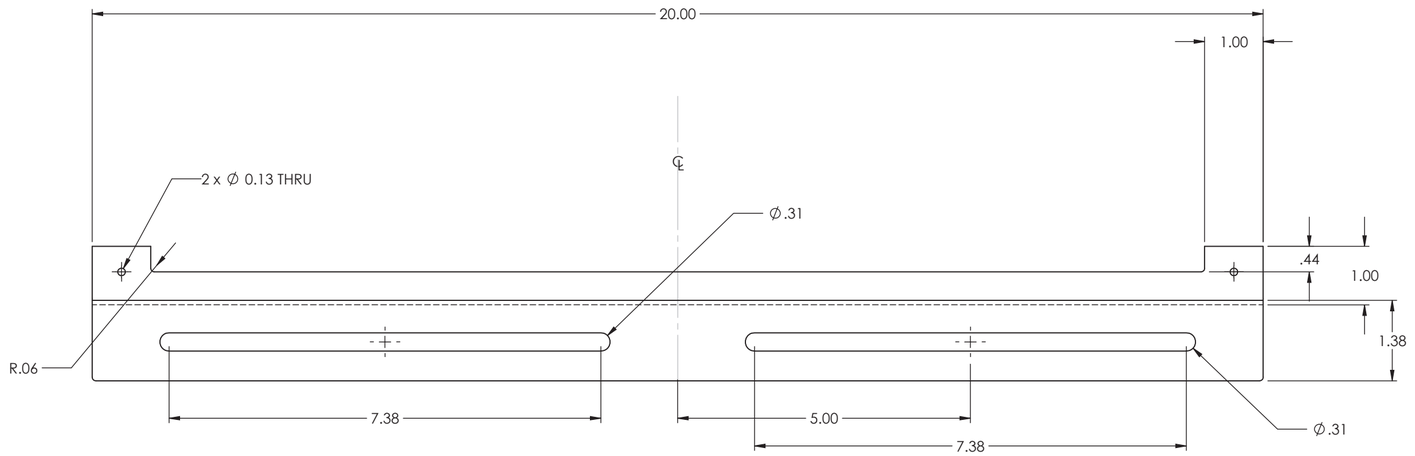

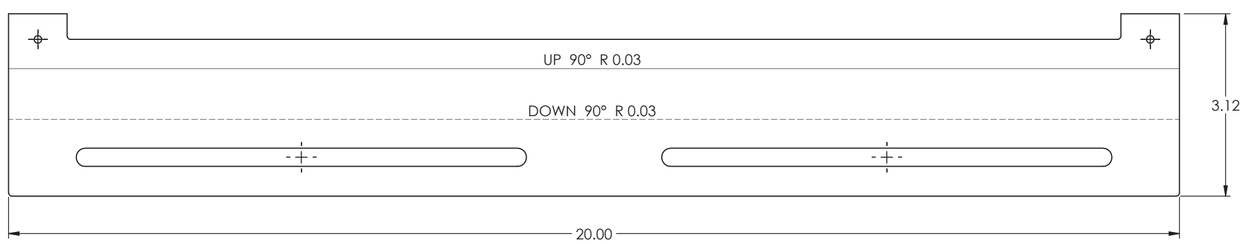

REVISION		NAME	DATE	DEMA INDUSTRIES LIMITED
	DRAWN		26/03/2018	
	CHECKED			
	ENG APPR.			TITLE: UNISTRUT MOUNTING BRACKET — REV
MATERIAL	UNSPECIFIED TOLERANCES (INCH)		PROJECTION	
FINISH	FRACTION ±1/32; 1 PLACE DECIMAL ±.020; 2 PLACE DECIMAL ±.010; 3 PLACE DECIMAL ±.005; 4 PLACE DECIMAL ±.001; ANGLES ±1°		THIRD ANGLE	SIZE C — DRAWING NO. DE2084-18
				SCALE — UNIT INCH — SHEET — OF

REV
DE2084-18
C

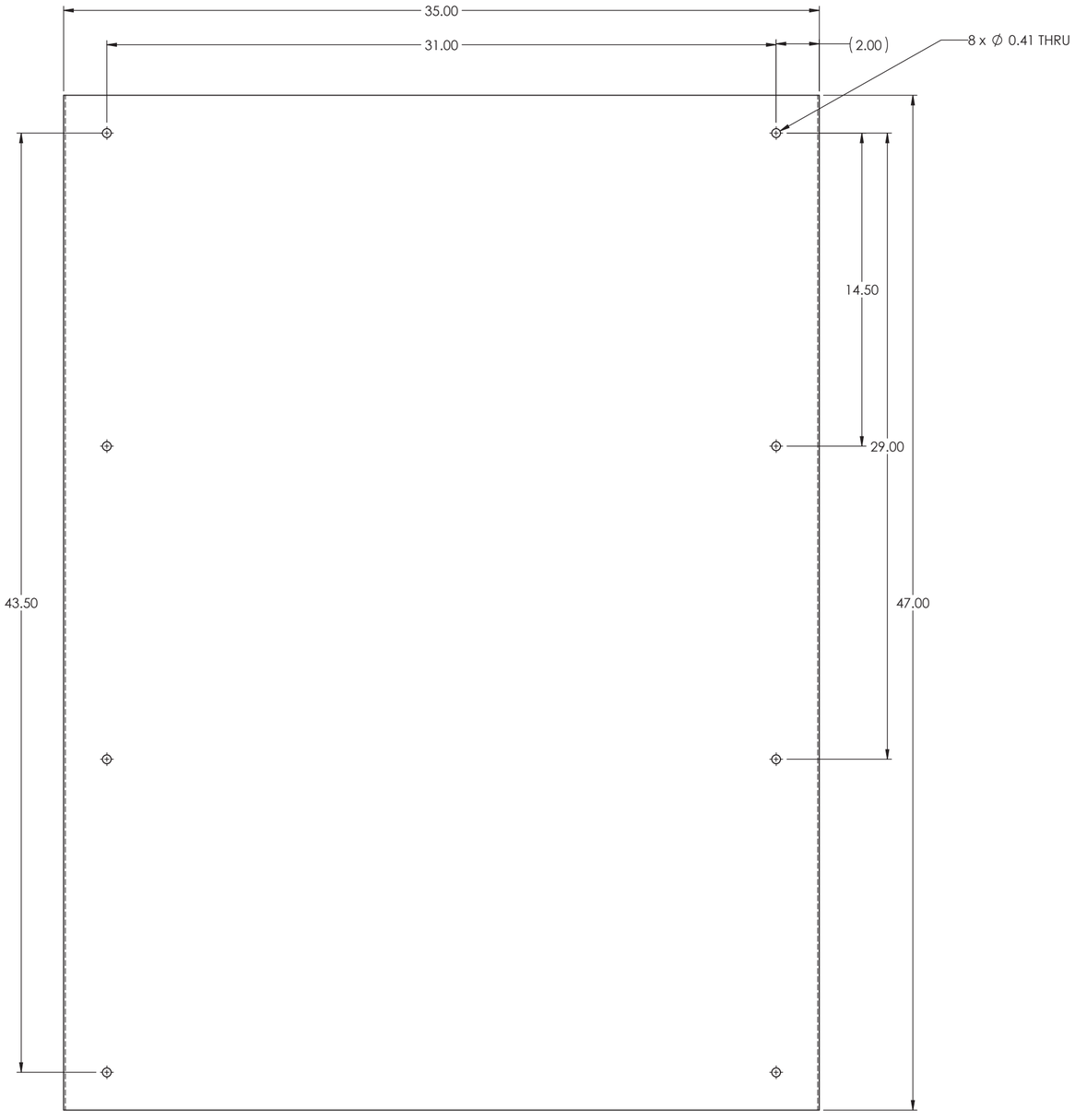

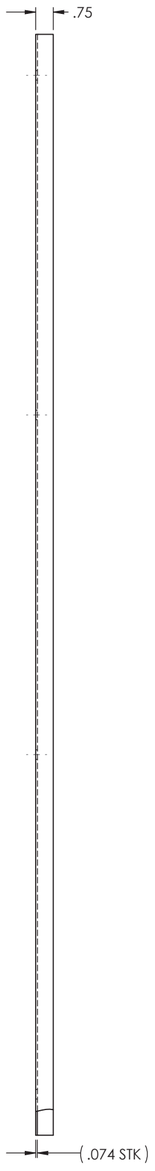

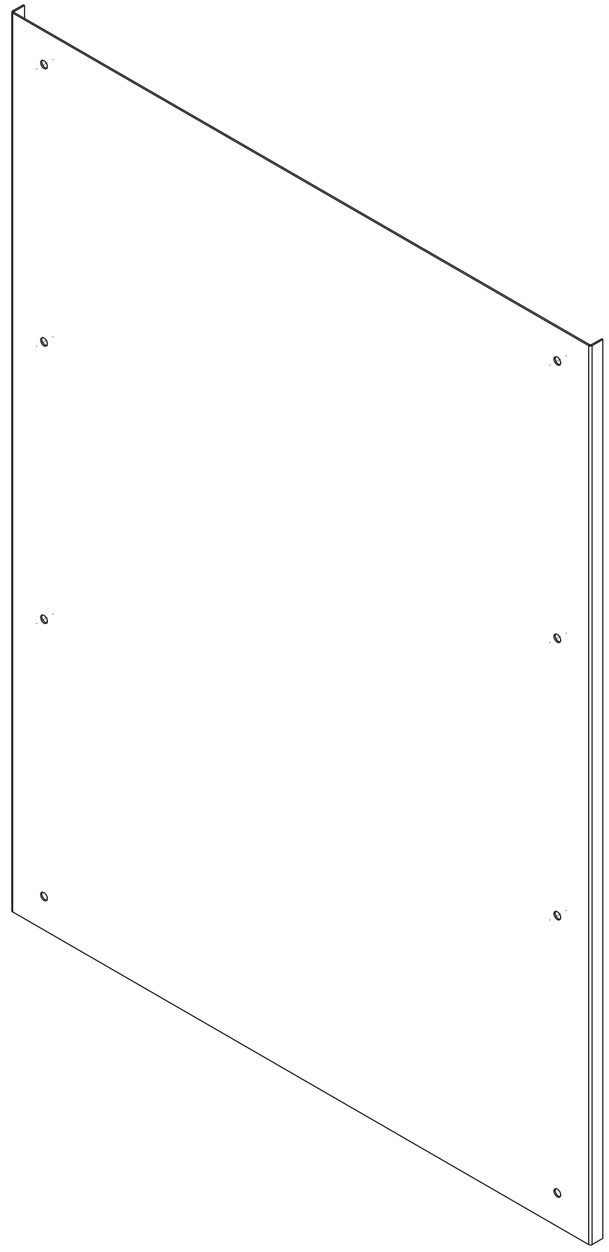

REVISION		NAME	DATE	DEMA INDUSTRIES LIMITED	
	DRAWN		26/03/2018		
	CHECKED				
	ENG APPR.			TITLE MOUNTING PANEL	REV
MATERIAL 14 GA CRS	UNSPECIFIED TOLERANCES (INCH)		PROJECTION		
FINISH POWDER COAT WHITE	FRACTION ±1/32 1 PLACE DECIMAL ±.020 2 PLACE DECIMAL ±.010 3 PLACE DECIMAL ±.005 4 PLACE DECIMAL ±.001 ANGLES ±1°		THIRD ANGLE	SIZE C DRAWING NO. DE2084-19	
				SCALE 1 : 5 UNIT INCH SHEET 27 OF 27	

REV
DE2084-19
C

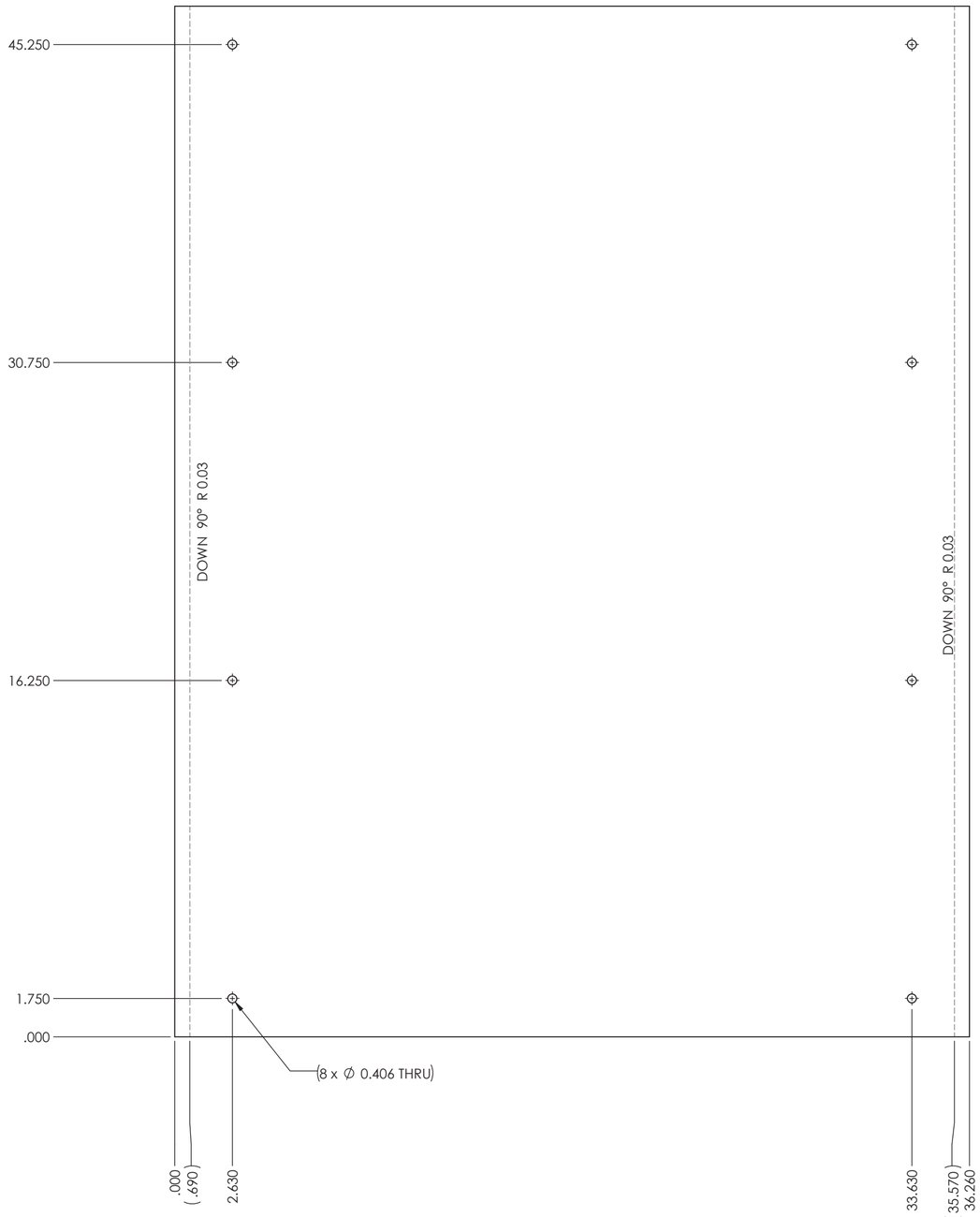

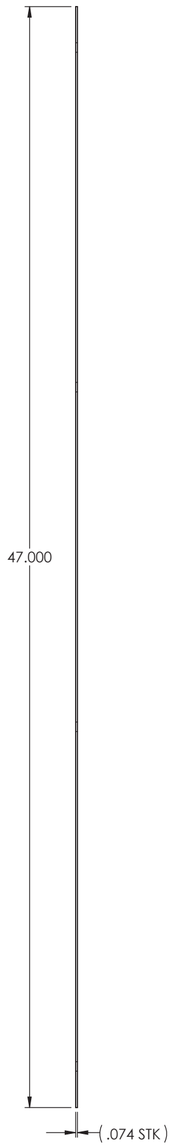

REVISION		NAME	DATE	DEMA INDUSTRIES LIMITED
	DRAWN		26/03/2018	
	CHECKED			
	ENG APPR.			TITLE: MOUNTING PANEL — REV
MATERIAL: 14 GA CRS	UNSPECIFIED TOLERANCES (INCH)		PROJECTION	
FINISH: POWDER COAT WHITE	FRACTION ±1/32; 1 PLACE DECIMAL ±.020; 2 PLACE DECIMAL ±.010; 3 PLACE DECIMAL ±.005; 4 PLACE DECIMAL ±.001; ANGLES ±1°		THIRD ANGLE	SIZE C — DRAWING NO. DE2084-19
				SCALE 1 : 5 — UNIT INCH — SHEET 28 OF 28

REV C — DE2084-19

CONFIDENTIAL NOTICE: This drawing and the designs, specifications and engineering information disclosed hereon are the property of Eberhard Manufacturing Company and are not to be disseminated or reproduced without express written consent. The drawing is loaned in confidence and then only for consideration of the matter disclosed hereon. In accepting loan of this drawing, recipient agrees to keep it and the matter disclosed hereon in confidence and not to use nor permit their use in any way detrimental to Eberhard Manufacturing Company, Division of the Eastern Company. 21944 Drake Road, Cleveland, Ohio 44149-9712 © 2012 EBERHARD MFG. CO.

REVISION HISTORY

REV	DESCRIPTION	EN	DATE
	REVISED, REDRAWN AND CONVERTED TO 3D	5569	8-31-12

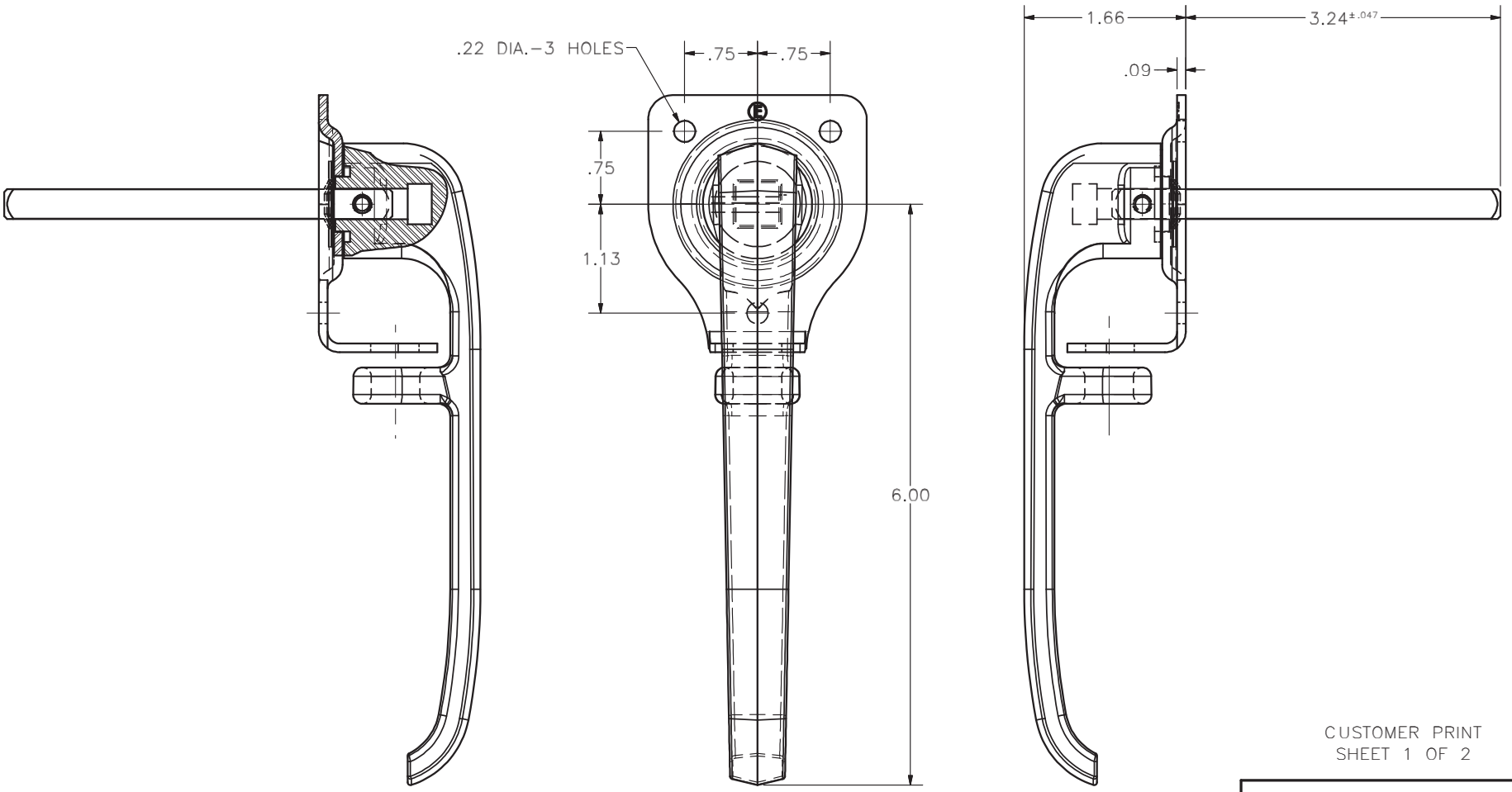

CUSTOMER PRINT
SHEET 1 OF 2

SUPERSEDES DRAWING 5655-X DATED 9-7-06.

THIS DOCUMENT IS IN ACCORDANCE WITH ASME Y14.15–2009
LINEAR MEASURE: INCH
UNLESS OTHERWISE SPECIFIED TOLERANCES ARE AS FOLLOWS:

	IN	MM
ANGLES:	±2°	±2°
2 PLACE DEC.:	±.03	±.76
3 PLACE DEC.:	±.015	±.38
ALL HOLES:	±.005	±.13

DATE 8/17/2012
DR.BY FLP
SCALE FULL
CHK.BY

EBERHARD MANUFACTURING CO.
DIVISION OF
THE EASTERN COMPANY
CLEVELAND, OHIO 44149–9712

NAME: PADLOCK TYPE DROP HANDLE ASSEMBLY
MATERIAL: ––––––
PART NUMBER: 5655–X

C:\Working_Folder\Archive\Pro\5\5655\5655-X SH1.idw