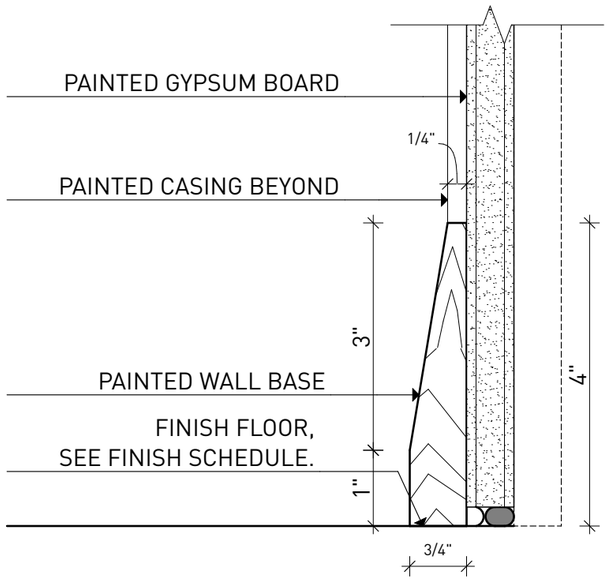

1 TYPICAL WALL BASE - SECTION
SCALE: 6" = 1'-0"

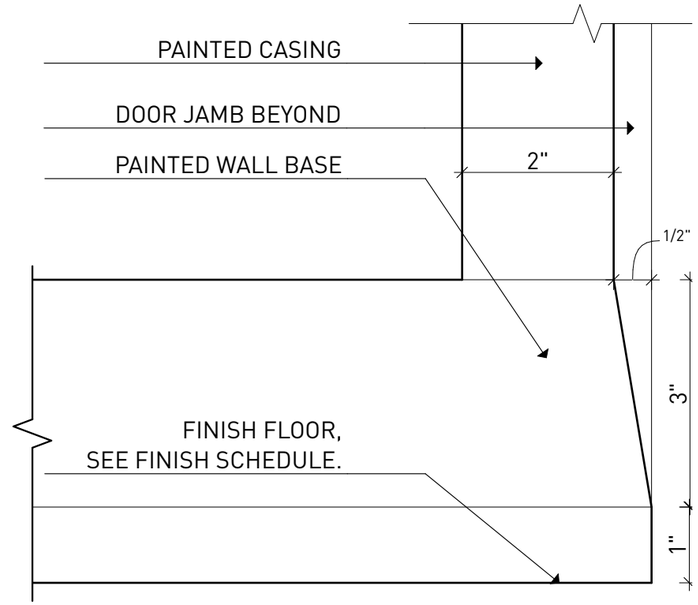

2 WALL BASE/ CASING - ELEV. DETAIL AT DOOR JAMB
SCALE: 6" = 1'-0"

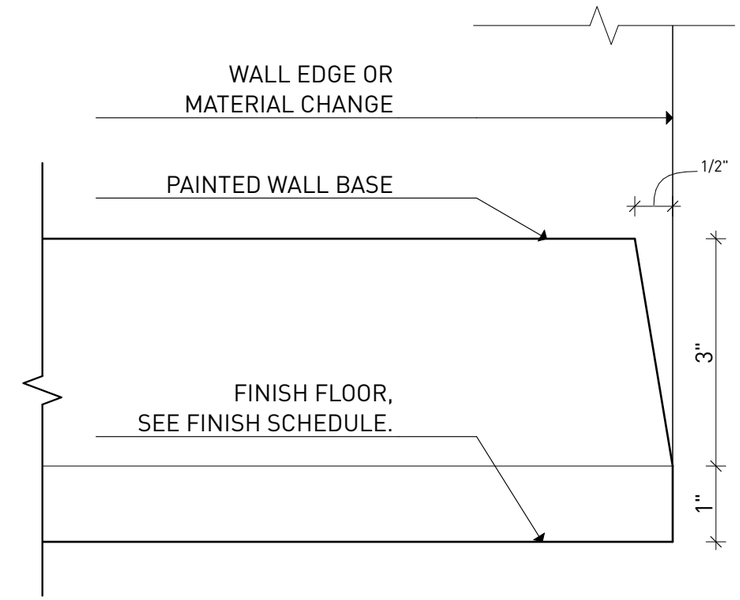

3 WALL BASE TERMINATION - ELEVATION DETAIL
SCALE: 6" = 1'-0"

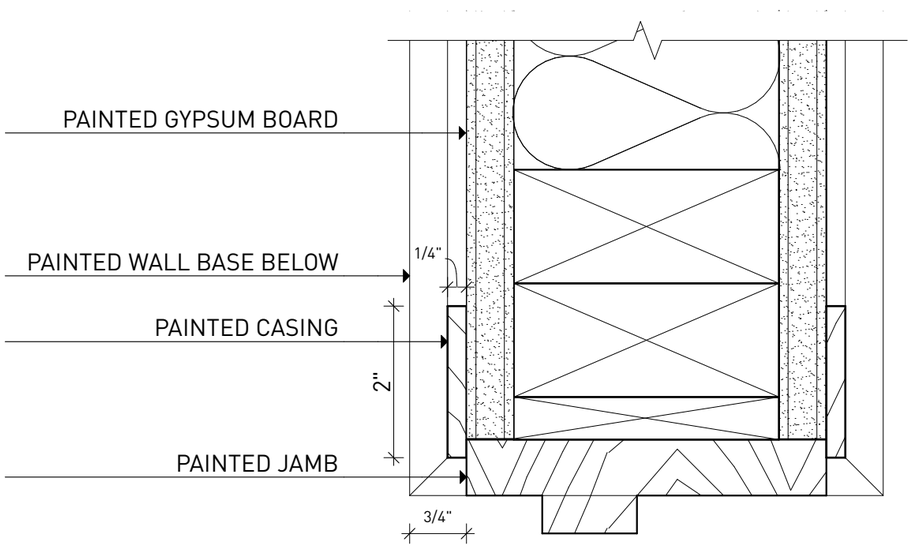

4 WALL BASE/ CASING - PLAN DETAIL
SCALE: 6" = 1'-0"

15 ALLEN STREET

15 ALLEN ST
BUFFALO NY 14202
USA

TYPICAL TRIM DETAILS

sk-CA01

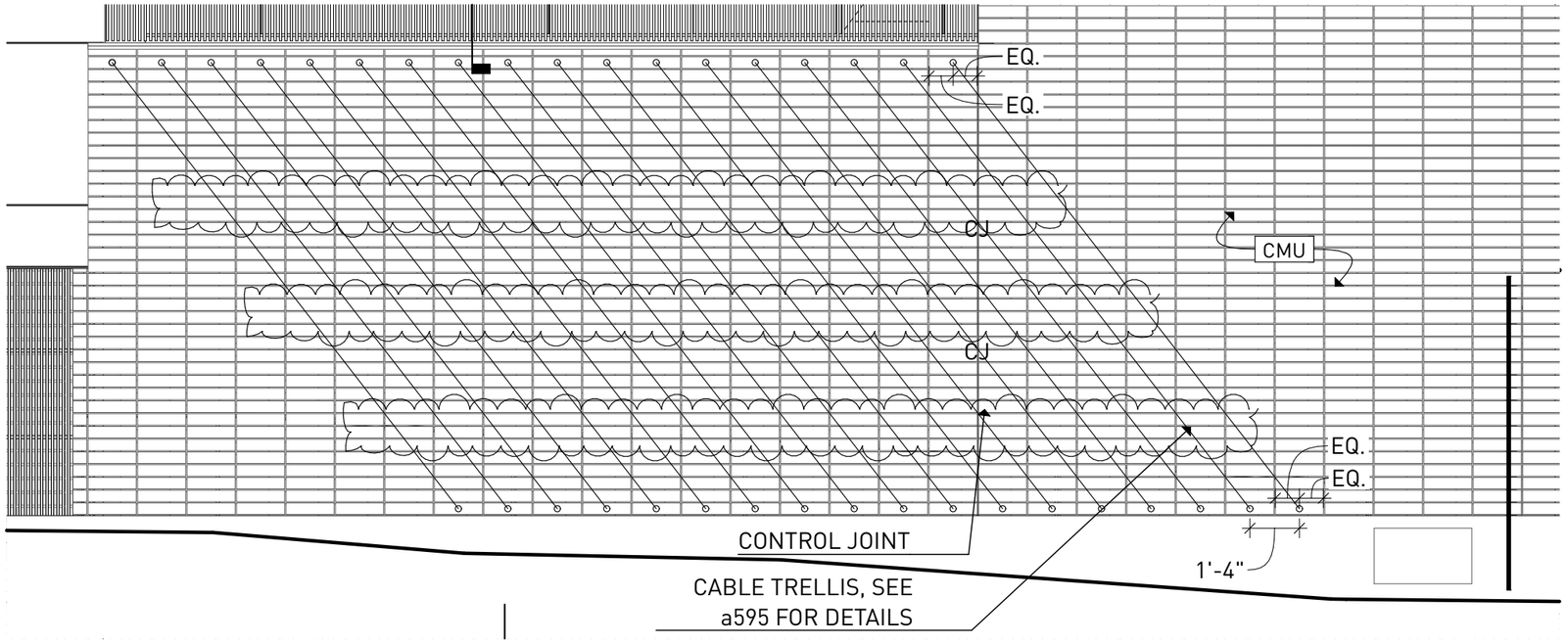

1 REVISED TRELLIS ELEVATION
SCALE: 1/4" = 1'-0"

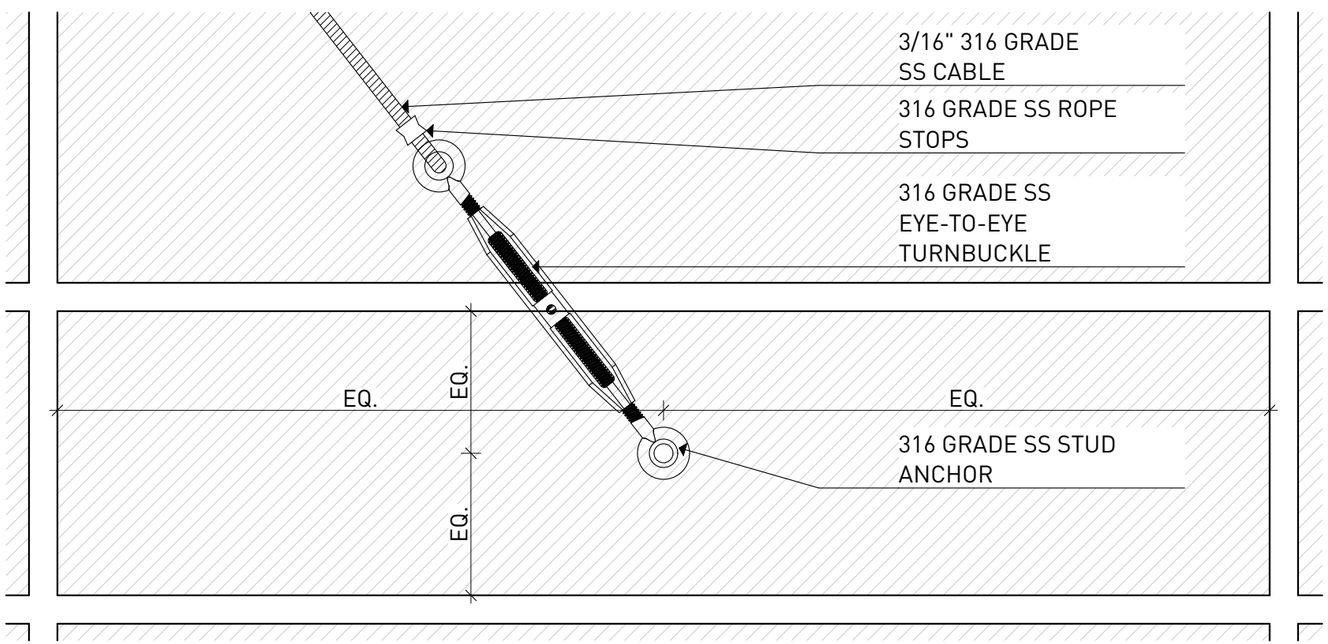

2 TRELLIS ANCHOR ELEVATION DETAIL
SCALE: 6" = 1'-0"

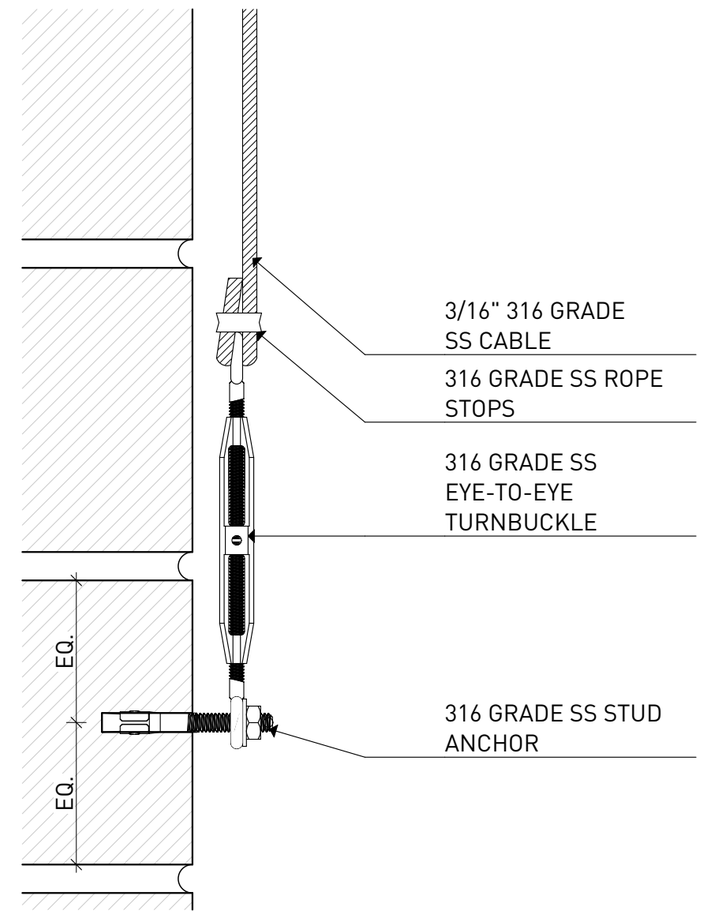

3 TRELLIS ANCHOR SECTION DETAIL
SCALE: 6" = 1'-0"

15 ALLEN STREET

15 ALLEN ST
BUFFALO NY 14202
USA

REVISED TRELLIS

SK-CA02

asap/ adam sokol architecture practice pllc
19 Allen Street Suite 100, Buffalo, NY 14202 USA
t +1.716.235.8082 f +1.888.205.0777

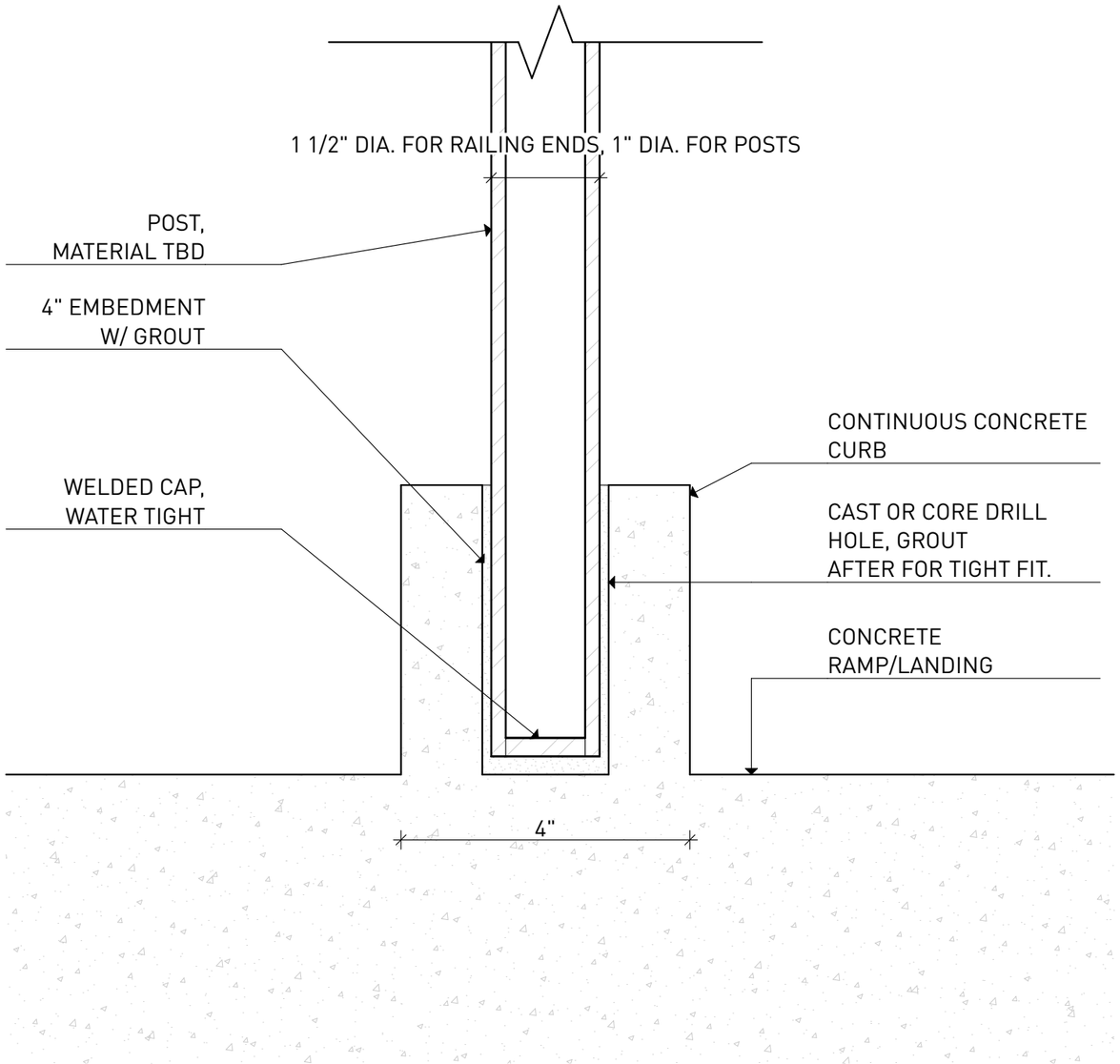

1 TYP. EXTERIOR HANDRAIL POST - ALT. 1
SCALE: 6" = 1'-0"

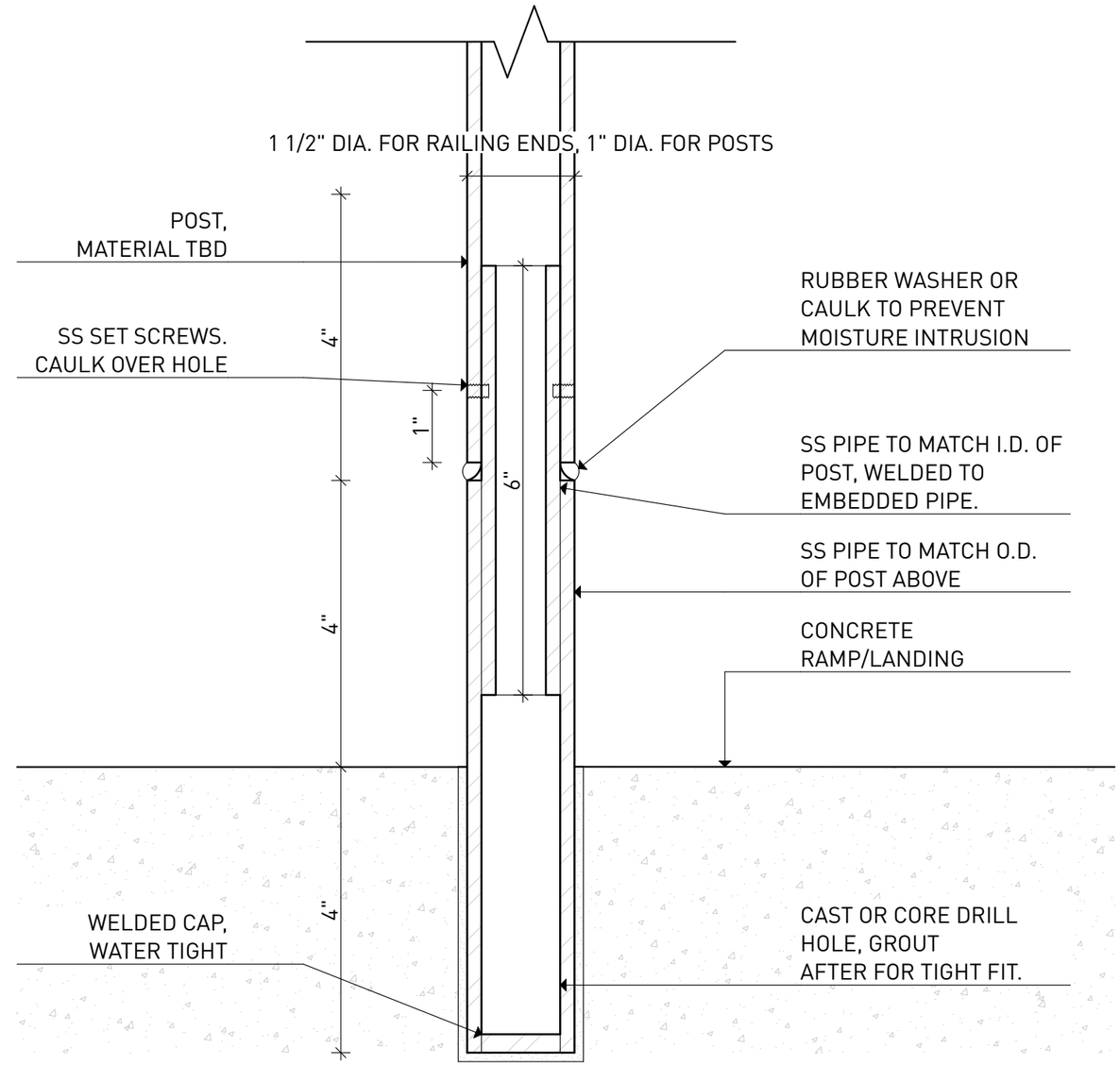

2 TYP. EXTERIOR HANDRAIL POST - ALT. 2
SCALE: 6" = 1'-0"

15 ALLEN STREET

15 ALLEN ST
BUFFALO NY 14202
USA

REVISED EXTERIOR HANDRAIL

SK-CA03

asap/ adam sokol architecture practice pllc
19 Allen Street Suite 100, Buffalo, NY 14202 USA
t +1.716.235.8082 f +1.888.205.0777

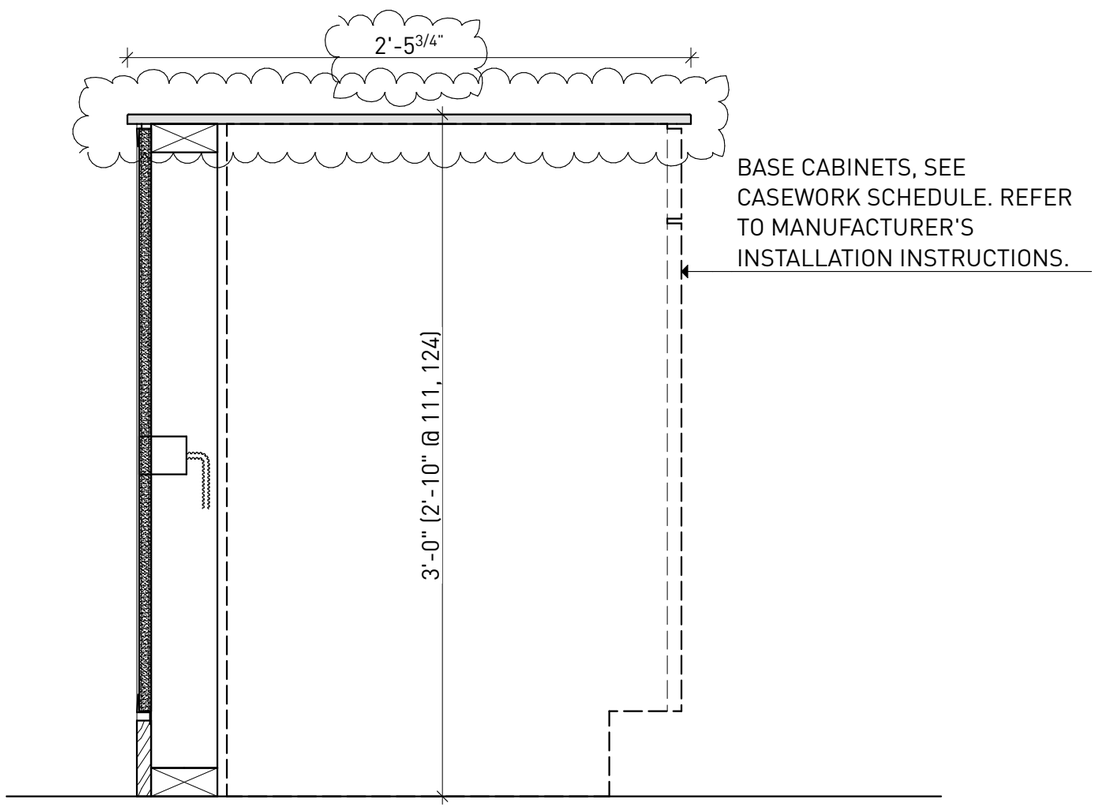

1 TYP. CABINET SECTION
SCALE: 1 1/2"= 1'-0"

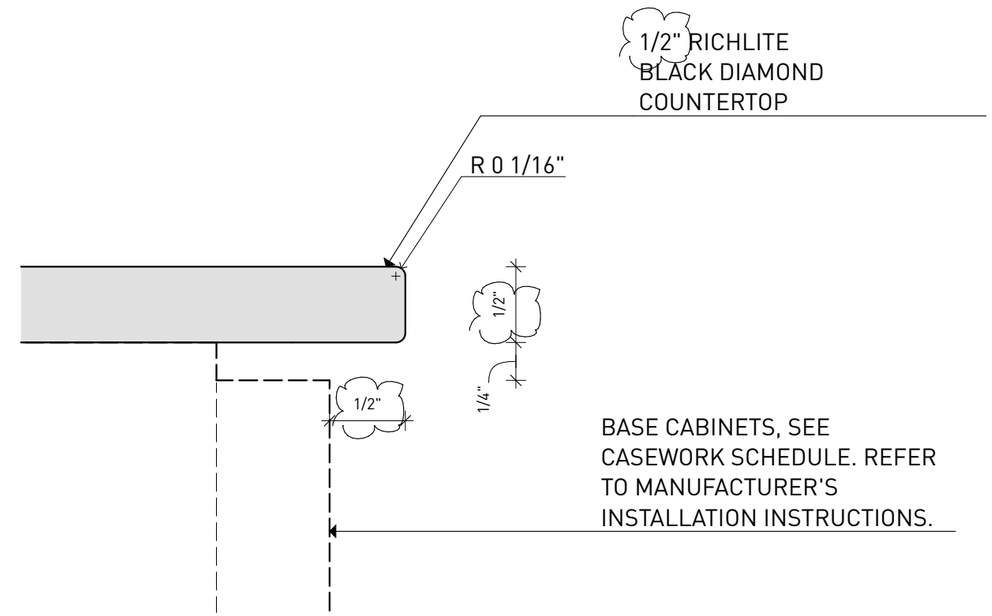

2 TYP. COUNTER EDGE DETAIL
SCALE: 1' = 1'-0"

15 ALLEN STREET

15 ALLEN ST
BUFFALO NY 14202
USA

REVISED COUNTERTOP

SK-CA04

asap/ adam sokol architecture practice pllc
19 Allen Street Suite 100, Buffalo, NY 14202 USA
t +1.716.235.8082 f +1.888.205.0777